City of Poughkeepsie
Planning Board
Meeting Agenda

Common Council Chambers
Tuesday, January 27, 2026
6:00 PM

I. ROLL CALL

II. APPROVAL OF MEETING MINUTES

1. Approval of December 17, 2025 Meeting Minutes

III. ADJOURNED APPLICATION REVIEW / PUBLIC HEARINGS

1. 488 MAIN STREET: SITE PLAN

IV. REVIEW OF RESOLUTIONS

1. 141 NORTH WATER STREET: SITE PLAN

Application for the proposed construction of a fifty-six (56) unit residential building with accessory structured parking. Owner/Applicant; 141 North Water Street LLC; Consultant: KARC Planning Consultants, Inc.; Grid #6062-59-771405; Zoning District: W; File #PB2025-065

V. PUBLIC HEARINGS FOR SITE PLANS/SPECIAL PERMITS/SUBDIVISIONS

1. 654 & 698 MAIN STREET, PARCELS 6161-33-526859 THROUGH 6161-33-567848 REYNOLDS AVENUE: SITE PLAN, SPECIAL PERMIT AND SUBDIVISION

Application from EFDS Realty Corp for the subdivision, site plan and special permit review to reconfigure fourteen lots into three lots of record. One lot, 654 Main Street, would retain the existing grocery store. Another

lot, 698 Main Street, is to contain a mixed-use building with commercial space on the first floor and 7 dwelling units. The third lot is to front Reynolds Avenue and contain 18 dwelling units. The existing parking lot will be reconfigured to include fewer spaces overall and additional landscaping. The parking lot is proposed to be shared between the three properties, File #PB2024-006

VI. SEQRA REVIEW

1. 185 SMITH STREET: SITE PLAN

Application for the proposed expansion of an existing automobile repair shop and accessory parking lot. Owner: Ricky Autobody Inc. Applicant: Devanand Jaikarran; Consultant: Studio 90 Design & Planning; Grid # 6162-65-510286; Zoning District: R&D; File #PB2025-112

2. 16 PERSHING AVENUE: SITE PLAN

Application for a proposed addition to an existing automobile repair shop including a new one story attached parking garage. Owner: AJ Autobody LLC; Applicant: Devanand Jaikarran; Consultant: Studio 90 Design & Planning; Grid #PB2025-113; Zoning District: MU5; File #PB2025-113

3. MILTON STREET LOT # 6162-73-623227: REZONING

Referral from the Common Council for SEQRA review of an application for the rezoning of lot # 6162-73-623227 from Residential Neighborhood A to Residential Neighborhood D, and the construction of two multifamily buildings including 63 units between them. Application for site plan review for new construction of two multi family developments. Owner/Applicant: Maselo Realty, LLC; Consultant: LaBella Associates; Grid #PB2025-113; Zoning District: RNA; File #2025-140

VII. SITE PLANS/SPECIAL PERMITS/SUBDIVISIONS

1. 49 & 85 CIVIC CENTER PLAZA: SITE PLAN

Application for site plan review for the expansion and reconfiguration of the existing accessory parking lots at 49 and 85 Civic Center Plaza. Owner/Applicant: Journal Plaza LLC/ Page Park Associates LLC; Consultant: KARC Planning, Kelly Libolt & LRC Group; Grid # 6162-69-065177 & 6162-69-090193; Zoning District: PID-B; File # PB2025-126

2. 584 MAIN STREET:SITE PLAN AMENDMENT/FAÇADE REVIEW

Application for review of amended as-built elevations at 584 Main Street. Owner/Applicant: 584 Main Street, LLC; Consultant: Kevin Yereance, Architect; Grid # 6161-24-439917; Zoning District: ; File #2025-133

VIII. ADJOURNMENT

1. Meeting Adjourned to Tuesday, Februaruy 24, 2026

City of Poughkeepsie Planning Board Meeting
DRAFT Minutes

Common Council Chambers
Wednesday, December 17, 2025, 6:00 PM

I. ROLL CALL

Present: Chair Saylor, Member Andujar-McNeil, Member Petsas, Member Holland, Member Smith
Excused: Member Peña Member Egan, Member Veltre
Consultant: Chris Kroner, MASS Design
Staff:
Rebecca Valk, Corporation Council
Europa McGovern, Commissioner of Development
Tyler Maegerle, City Planner
Lori Garcia, Board Administrative Assistant

II. APPROVAL OF MEETING MINUTES

1. Approval of October 28, 2025 Minutes
Approval of November 19, 2025 Minutes

A motion to Approve was made by Member Holland and seconded by Member Andujar- McNeil.

Minutes of December 17, 2025 - VOICE VOTE	
Yes/Aye:	Chair Saylor, Member Andujar-McNeil, Member Petsas, Member Holland, Member Smith
No/Nay:	None
Abstain:	None
Absent:	Member Peña Member Egan, Member Veltre
Result:	**Passed**

III. EXTENSION REQUESTS

1. 31 & 39 MARKET STREET

The conversion of the existing office buildings at 31 and 39 Market Street to a mixed-use building with restaurants, box office/lobby space and office space of the first floors, and a total of 49 dwelling units of the upper floors, including construction of two additional stories on the building at 39 Market Street and the

combining of the two lots into a single lot of record. Owner/Applicant: 31 Market LLC; Consultant: Natalie Quinn, KARC Planning Consultants; Grid # 6162-77-030072 and 031066; Zoning District: PID-HC; File #2024-061

A motion to Approve was made by Member Andujar- McNeil and seconded by Member Holland.

Minutes of December 17, 2025 - VOICE VOTE	
Yes/Aye:	Chair Saylor, Member Andujar-McNeil, Member Petsas, Member Holland, Member Smith
No/Nay:	None
Abstain:	None
Absent:	Member Peña Member Egan, Member Veltre
Result:	**Passed**

2. 47-51 CANNON STREET:SITE PLAN

Construction of a 6-story mixed use building at 47-51 Cannon Street, with first floor restaurant/artisanal beverage production and 140 dwelling units on the upper stories. The proposal includes the demolition of two existing buildings and combining two lots of record into a single lot of record. Owner: 47 Cannon Street, LLC; Applicant: James Sullivan; Consultant: LRC Engineering & Surveying; Grid # 6162-77-086045 and 092041; Zoning District: PID-UV; File #2024-060

A motion to Approve was made by Member Andujar- McNeil and seconded by Member Holland.

Minutes of December 17, 2025 - VOICE VOTE	
Yes/Aye:	Chair Saylor, Member Andujar-McNeil, Member Petsas, Member Holland, Member Smith
No/Nay:	None
Abstain:	None
Absent:	Member Peña Member Egan, Member Veltre
Result:	**Passed**

IV. REVIEW OF RESOLUTIONS

1. 136 PARKER AVENUE: SITE PLAN

Application for the proposed conversion of an existing office building into a multi-family residence containing five dwelling units. Owner: DNH Valley LLC; Applicant: Hammad Ahemd; Consultant: Amy Bombardieri, Day Stokosa Engineering, PPLC; Grid #6162-55-257435; Zoning District: W-G File #PB2025-045

Presenting: Amy Bombardieri, Day Stokosa Engineering, PPLC

A motion to Approve was made by Member Andujar- McNeil and seconded by Member Holland.

Minutes of December 17, 2025 - VOICE VOTE	
Yes/Aye:	Chair Saylor, Member Andujar-McNeil, Member Petsas, Member Holland, Member Smith
No/Nay:	None
Abstain:	None
Absent:	Member Peña Member Egan, Member Veltre
Result:	**Passed**

V. PUBLIC HEARINGS FOR SITE PLANS/SPECIAL PERMITS/SUBDIVISIONS

1. 488 MAIN STREET: SITE PLAN

Application for site plan review relative to the proposed development of the property at 488 Main Street for a mixed-use building containing ground floor commercial space fronting Main Street with 81 dwelling units, accessory parking and an accessory playground with access from Cannon Street. This action is subject to a coordinated SEQRA review. Owner/Applicant: Hudson River Housing, Inc; Consultant: CPL, Architecture, Engineering, Planning (Andrew Learn); Grid #6161-23- 290979; Zoning District: MU5; File #PB2025-048

Presenting: Mary Linge, Hudson River Housing
Andrew Learn, CPL, Architecture, Engineering, Planning

A motion to Open the public hearing was made by Member Holland and seconded by Member Andujar- McNeil.

Minutes of December 17, 2025 - VOICE VOTE	
Yes/Aye:	Chair Saylor, Member Andujar-McNeil, Member Petsas, Member Holland, Member Smith
No/Nay:	None
Abstain:	None
Absent:	Member Peña Member Egan, Member Veltre
Result:	**Passed**

Speaker: Laurie Sandow

A motion to Close the public hearing was made by Member Smith and seconded by Member Holland.

Minutes of December 17, 2025 - VOICE VOTE	
Yes/Aye:	Chair Saylor, Member Andujar-McNeil, Member Petsas, Member Holland, Member Smith
No/Nay:	None

Abstain:	None
Absent:	Member Peña Member Egan, Member Veltre
Result:	**Passed**

2. 141 NORTH WATER STREET: SITE PLAN

Application for the proposed construction of a fifty-six (56) unit residential building with accessory structured parking. Owner/Applicant; 141 North Water Street LLC; Consultant: KARC Planning Consultants, Inc.; Grid #6062-59-771405; Zoning District: W; File #PB2025-065

Presenting: Natalie Quinn, KARC Planning Consultants, Inc.
Sean O'Connell, Anderson Design Group

A motion to Open the public hearing was made by Member Holland and seconded by Member Andujar- McNeil.

Minutes of December 17, 2025 - VOICE VOTE	
Yes/Aye:	Chair Saylor, Member Andujar-McNeil, Member Petsas, Member Holland, Member Smith
No/Nay:	None
Abstain:	None
Absent:	Member Peña Member Egan, Member Veltre
Result:	**Passed**

Speaker: Laurie Sandow

A motion to Close the public hearing was made by Member Holland and seconded by Member Petsas.

Minutes of December 17, 2025 - VOICE VOTE	
Yes/Aye:	Chair Saylor, Member Andujar-McNeil, Member Petsas, Member Holland, Member Smith
No/Nay:	None
Abstain:	None
Absent:	Member Peña Member Egan, Member Veltre
Result:	**Passed**

VI. SEQRA REVIEW

1. 49 & 85 CIVIC CENTER PLAZA: SITE PLAN

Application for site plan review for the expansion and reconfiguration of the existing accessory parking lots at 49 and 85 Civic Center Plaza.

Owner/Applicant: Journal Plaza LLC/ Page Park Associates LLC; Consultant: KARC Planning, Kelly Libolt & LRC Group; Grid # 6162-69- 065177 & 6162-69-090193; Zoning District: PID-B; File # PB2025-126

Presenting: Natalie Quinn, KARC Planning Consultants, Inc.
John Morrow, KARC Planning Consultants, Inc.

A motion to declare Lead Agency was made by Member Andujar- McNeil and seconded by Member Holland.

Minutes of December 17, 2025 - VOICE VOTE	
Yes/Aye:	Chair Saylor, Member Andujar-McNeil, Member Petsas, Member Holland, Member Smith
No/Nay:	None
Abstain:	None
Absent:	Member Peña Member Egan, Member Veltre
Result:	**Passed**

VII. SITE PLANS/SPECIAL PERMITS/SUBDIVISIONS

1. 654 & 698 MAIN STREET, PARCELS 6161-33-526859 THROUGH 6161-33-567848 REYNOLDS AVENUE: SITE PLAN, SPECIAL PERMIT AND SUBDIVISION

Application for subdivision, site plan and special permit review relative to a proposed development that will include the reconfiguration of fourteen lots of record into three lots. One lot, 654 Main Street, contains an existing building with a supermarket which will not be altered. Another lot, 698 Main Street, will contain a mixed-use building with commercial on the first floor and 7 dwelling units. The third lot will front Reynold Avenue and contain 28 dwelling units. The residential developments will contain usable open space. The existing parking lot will be reconfigured to include fewer spaces overall and additional landscaping. The parking lot is proposed to be shared between the three properties; Owner/Applicant: EFDS Realty Corp; Consultant: Jay Diesing, RA AIA, Mauri Architects PC; Grid #6161-33- 543870, 543870, 543864, 543859, 543858, 543857, 543856, 543855, 543854, 543853, 543852, 543851, 543850, 543849, 543848; Zoned: C-2A, R-4; File #PB2024-006

Presenting: Brandon Petrella, Mauri Architects

A motion to schedule a public hearing Tuesday 1/27/26 was made by Member Andujar- McNeil and seconded by Member Holland.

Minutes of December 17, 2025 - VOICE VOTE	
Yes/Aye:	Chair Saylor, Member Andujar-McNeil, Member Petsas, Member Holland, Member Smith
No/Nay:	None

Abstain:	None
Absent:	Member Peña Member Egan, Member Veltre
Result:	**Passed**

VIII. ADJOURNMENT

1. Meeting adjourned to January 27, 2026

A motion to Adjourn was made by Member Holland and seconded by Member Andujar- McNeil.

Minutes of December 17, 2025 - VOICE VOTE	
Yes/Aye:	Chair Saylor, Member Andujar-McNeil, Member Petsas, Member Holland, Member Smith
No/Nay:	None
Abstain:	None
Absent:	Member Peña Member Egan, Member Veltre
Result:	**Passed**

APPLICATION TO THE PLANNING BOARD
CITY OF POUGHKEEPSIE, NEW YORK

Application for Site Plan, Special Permit & Facade Approval

OFFICE USE ONLY

CODE: PLSF

ID #_____

FEE: _____
Total, from:
$500, plus
$_____
($150 per 1000 square feet of floor area), plus
$_____
($35 per number of required parking spaces), plus
$_____
($500 for special permit, if applicable)

I. PROPERTY ADDRESS: 141 N Water Street, Poughkeepsie

II. PROPERTY OWNER: 141 North Water Street LLC
ADDRESS: 135 N Water Street
Poughkeepsie
NY, 12601 (state and zip code)

PHONE NUMBER: c/o 845-874-7166 (include area code)

III. NAME OF APPLICANT: Same as owner

ADDRESS: _____

_____

_____ (state and zip code)

PHONE NUMBER: _____ (include area code)

EMAIL ADDRESS: _____

(If applicant is NOT the owner, proof of owner's consent to the application MUST be provided.)

IV. CONSULTANT: Natalie Quinn, KARC Planning Consultants, Inc.

ADDRESS: PO Box 924
Poughkeepsie
NY, 12602 (state and zip code)

PHONE NUMBER: 845-874-7166 (include area code)

EMAIL ADDRESS: _____

V. PROPOSED USE or FAÇADE CHANGE (Summarize proposed use or uses):_____

Construction of a 56-unit residential building with accessory structured parking to serve residents.

VI. ZONING DISTRICT: W

(Proceed to XVII for special permit & façade approval only)

PROJECT INFORMATION

New construction: X (yes) _____ (no)

Change of use: _____ (yes) X (no)

Expansion/addition: _____ (yes) X (no)

Alteration: _____ (yes) X (no)

Cost of Construction: $ 19,000,000

LOT AND BULK INFORMATION:

Lot area: 1.028 (acres) 44,779.68 (square feet)

Building Footprint: 15,358 SF (proposed square feet for new construction)

_____ (existing square feet for change of use/expansion)

_____ (additional proposed square feet for expansion)

15,358 (total building footprint, square feet)

Lot Coverage: 34.30% (percentage, building coverage only) 65.39% Impervious coverage

Gross Floor Area: 56,017 (proposed square feet for new construction) excludes parking structure

_____ (existing square feet for change of use/expansion)

_____ (additional proposed square feet for expansion)

56,017 (total gross floor area, square feet)

Building Height: 5 (stories) 59' 11 7/8" (feet)

Floor Area Ratio: 1.25 (ratio of gross floor area divided by lot area)

VIII. PROJECT PARKING INFORMATION

A) Number of Off-Street Parking Spaces required: 70

B) Number of Off-Street Parking Spaces provided: 70

C) Waiver Requested: _____ (Yes) X (No)

Is municipal parking available within 600 feet? _____ (Yes) X (No)

If yes, name all such municipal facilities: _____

_____

_____

(If a waiver is requested based on proximity to municipal facilities, a written request for such waiver, addressed to the City Planning Staff and the Chairman of the Planning Board, must be submitted with the application.)

If a private parking facility is to be utilized, is such facility within 600 feet?

_____ (Yes) (No)

If yes, provide the address of the facility, name of the property owner, number of spaces in the lot, number of spaces available for lease, and length of lease. Attach copy of lease. Additional information may be required by the Planning Board): _____

_____

_____

_____

IX. RESIDENTIAL PROPOSALS

A) Type of Development: Multi-family
(Townhouse, condominium, multiple residence rental, etc.)

B) Unit Breakdown:

Number of efficiency or "studio" units: 11

Number of one (1) bedroom units: 19

Number of two (2) bedroom unit's 26

Number with three or more bedrooms: 0

Total number of units: 56

C) Is funding public?____Yes_X_No
If yes, describe funding source: _____

X. OFFICE PROPOSALS (____Medical/Dental_____Professional_____Business)

A) Number of Employees: _____
B) Number of doctors/dentists/medical practitioners: _____
C) Days/Hours of Operation: _____

XI. SERVICE BUSINESS PROPOSALS

A) Specify Business: _____
(e.g., laundromat, drycleaner, beauty parlor, travel agency, banks)

B) Number of Employees: _____

C) Number of Washing Machines (for laundromat): _____

D) Days/Hours of Operation: _____

XII. MERCANTILE PROPOSALS (Retail_____Wholesale_____)

A) Type of Mercantile (specify): _____

B) Number of Employees: _____

C) Days/Hours of Operation: _____

XIII. STANDARD RESTAURANT/FAST FOOD RESTAURANT/COFFEE SHOP/DONUT SHOP/NIGHTCLUB/DISCOTHEQUE/BAR PROPOSALS

A) Specify Use: _____

B) Number of seats (excluding bar stools and outdoor seating):_____

C) Meals served (i.e., breakfast, lunch, dinner): _____

D) Type of Menu: _____

E) Days/Hours of Operation: _____

F) Entertainment (live and/or recorded):_____

G) Will the restaurant contain a bar/lounge?: _____Yes_____No

H) If yes, how many seats at the bar? _____

I) Is a drive-through window proposed? _____

J) Is a walk-up window proposed? _____

K) Is an outdoor seating area proposed? _____

L) If yes, how many seats are proposed? _____

M) If yes, is outdoor cooking proposed? _____

XIV. INDUSTRIAL/COMMERCIAL PROPOSALS (Automobile repair, taxi, motor vehicle sales, warehouse, manufacturing, animal hospital, research facilities, etc.)

A) Specify Use: _____

B) Number of shifts (if any): _____

C) Number of employees: _____
(If shifts are proposed, list number of employees per shift)

E) Number of work bays (if automobile repair): _____

F) Days/Hours of operation: _____

XV. EDUCATIONAL/INSTITUTIONAL/RECREATIONAL PROPOSALS (e.g., Museums, Theatres, Conference Centers, Hotels, Motels, Hospitals, Nursing Homes, Assisted Living Facilities, Nursery Schools, Private Schools, Day Care Centers, Places of Worship, Marinas, Membership Clubs, etc.)

A) Specify: _____

B) Number of shifts (if any): _____

C) Number of employees: _____
(If shifts are proposed, list number of employees per shift)

D) Number of beds (hospitals, nursing homes, etc): _____

E) Number of seats in largest assembly space: _____

F) Number of classrooms (schools): _____

G) Number of rental units (hotels, motels, etc.) _____

H) Number of boat slips/courts (e.g., tennis, handball, etc.), alleys: _____

I) Days/Hours of Operation: _____

XVI. PROPOSALS NOT MENTIONED ABOVE (Please be specific):

_____

_____

_____

_____

_____

XVII. APPLICANT CERTIFICATION

I, Natalie Quinn, agent for applicant, certify that the this application has addressed the objectives outlined in the Zoning Ordinance with consideration given to the public health, safety and welfare; the comfort and convenience of the public in general or the residents or users of the proposed development and of the immediate neighborhood.

The applicant certifies that all information contained herein is accurate and complete as of the date of this application.

_____ September 30, 2025

Signature of Applicant Date

KARC
PLANNING CONSULTANTS, INC.

July 9, 2025

To whom it may concern:

Please accept this letter as written authorization that KARC Planning Consultants, Inc. is authorized to sign as Agent on behalf of 141 North Water Street, LLC, with respect to permits and applications before the City of Poughkeepsie.

Sincerely,

_____

Jacob Wagschal
141 North Water Street, LLC

City of Poughkeepsie
Waterfront Assessment Form (WAF)

A. INSTRUCTIONS

1. Applicants, or, in the case of direct actions, City agencies shall complete this Waterfront Assessment Form for proposed actions which are subject to the LWRP Consistency Review Law. This assessment is intended to supplement other information used by a City agency in making a determination of consistency with the policy standards set forth in the LWRP Consistency Review Law.

2. Before answering the questions in Section C, the preparer of this form should review the policies and policy explanations contained in the City of Poughkeepsie Local Waterfront Revitalization Program (LWRP), a copy of which is on file in the offices of the City Clerk and posted on the city's website. A proposed action should be evaluated as to its beneficial and adverse effects upon the Waterfront Revitalization Area (WRA) and its consistency with the policy standards.

3. If any question in Section C on this form is answered "yes", the proposed action may affect the achievement of the LWRP policy standards contained in the Consistency Review Law. Thus, the action should be analyzed in more detail and, if necessary, modified prior to making a determination that is consistent with the LWRP policy standards. If an action cannot be certified as consistent with the LWRP policy standards and conditions, it shall not be undertaken.

B. DESCRIPTION OF SITE AND PROPOSED ACTION

1 Describe nature and extent of action:

Construction of a 56-unit multi-family development with accessory parking to serve the residents on parcel 6062-59-771405 in the City of Poughkeepsie. This property had site plan approval for a 20-unit development in January of 2021.

2. Type of City agency action (check appropriate response):

a. Directly undertaken (e.g. construction, planning activity, agency regulation, land transaction)

Construction (site plan approval process)

b. Financial assistance (e.g. grant, loan, subsidy)

N/A

c. Permit, approval, license, certification

Seeking site plan approval

d. Agency undertaking action:

City of Poughkeepsie Planning Board

3. If an application for the proposed action has been filed with a City, the following information shall be provided:

a. Name of applicant

141 North Water Street LLC (c/o Natalie Quinn, KARC Planning Consultants)

b. Mailing address:

135 N Water Street, Poughkeepsie, NY 12601

c. Telephone number:

c/o (845) 874-7166

d. Property tax number:

6062-59-771405

e. Application number, if any:

4. Will the action be directly undertaken, require funding, or approval by a State or federal agency?

Yes _____ No _____

If yes, which State or federal agency? _____

1. Location of action (Street or Site Description and nearest intersection):

N Water Street, City of Poughkeepsie

6. Size of site (acres): 1.028 acres

7. Amount (acres) of site to be disturbed: 0.94 acres

8. Present land use: Vacant

9. Present zoning classification: W - Waterfront

10. Describe any unique or unusual landforms on the project site (i.e. bluffs, wetlands, other geological formations): _____

The project site is located on top of a bluff overlooking the Hudson River. There is some rock outcropping to the south of the site, however, portions of the rock/bluff have been removed during construction activity on the neighboring parcel. No wetlands exist onsite.

11. Percentage of site that contains slopes of 15% or greater: 37.59%

12. Streams, lakes, ponds or wetlands existing within or continuous to the project area?

(a) Name N/A

(b) Size (in acres) _____

13. Is the property serviced by public water? Yes ✓ No _____

14. Is the property serviced by public sewer? Yes ✓ No _____

C. WATERFRONT ASSESSMENT (Check either "Yes" or "No" for each of the following questions). If the answer to any question above is yes, please explain in Section D any measures which will be undertaken to mitigate any adverse effects.

		YES	NO
1.	Will the proposed action be located in, or contiguous to, or have a potentially adverse effect upon any of the resource areas found within the waterfront area as identified in the LWRP?	___	✓
(a)	Significant fish or wildlife habitats?	___	✓
(b)	Scenic resources of local or State-wide significance?	___	✓
(c)	Important agricultural lands?	___	✓
(d)	Natural protective features in a coastal erosion hazard area?	___	✓
2.	Will the proposed action have a significant effect upon:		
(a)	Scenic quality of the waterfront environment?	___	✓
(b)	Development of future or existing water-dependent uses?	___	✓
(c)	Operation of the State's major ports?	___	✓
(d)	Land or water uses within a small harbor area?	___	✓
(e)	Designated State or federal freshwater wetlands?	___	✓
(f)	Commercial or recreational use of fish and wildlife resources?	___	✓
(g)	Existing or potential public recreation opportunities?	___	✓
(h)	Structures, sites or districts of historic, archaeological or cultural significance to the City, State or nation?	___	✓
(i)	Stability of the shoreline?	___	✓
(j)	Surface or groundwater quality?	___	✓

3. Will the proposed action involve or result in any of the following:

(a)	Physical alteration of land along the shoreline, underwater land or surface waters?	___	✓
(b)	Physical alteration of two (2) acres or more of land located elsewhere in the waterfront area?	___	✓
(c)	Expansion of existing public services or infrastructure in undeveloped or low-density areas of the waterfront area?	___	✓
(d)	Siting or construction of an energy generation facility not subject to Article VII or VIII of the Public Service Law?	___	✓
(e)	Mining, excavation, filling or dredging in surface waters?	___	✓
(f)	Reduction of existing or potential public access to, or along, the shoreline?	___	✓
(g)	Sale or change in use of publicly-owned lands located on the shoreline or underwater?	___	✓
(h)	Development within a designated flood or erosion hazard area?	___	✓
(i)	Development on a beach, dune, bluff or other natural feature that provides protection against flooding or erosion?	✓	___
(j)	Construction or reconstruction of erosion protective structures?	___	✓
(k)	Diminished or degraded surface or groundwater quantity and/or quality?	___	✓
(l)	Removal of ground cover from the site?	___	✓

Existing cover consists of impervious gravel area, asphalt pavement, and overgrown grass area.

4. PROJECT		YES	NO
(a)	If a project is to be located adjacent to shore:		
(1)	Does the project require a waterfront location?	___N/A	___
(2)	Will water-related recreation be provided?	___N/A	___
(3)	Will public access to the foreshore be provided?	___N/A	___
(4)	Will it eliminate or replace a water-dependent use?	___N/A	___
(5)	Will it eliminate or replace a recreational or maritime use or resource?	___N/A	___
(b)	Is the project site presently used by the community neighborhood as an open space or recreation area?	___	✓
(c)	Will the project protect, maintain and/or increase the level and types or public access to water-related recreation resources or facilities?	___	✓

(d)	Does the project presently offer or include scenic views or vistas that are known to be important to the community?	✓	___
(e)	Is the project site presently used for commercial or recreational fishing or fish processing?	___	✓
(f)	Will the surface area of any local creek corridors or wetland areas be increased or decreased by the proposal?	___	✓
(g)	Is the project located in a flood prone area?	___	✓
(h)	Is the project located in an area of high coastal erosion?	___	✓
(i)	Will any mature forest (over 100 years old) or other locally important vegetation be removed by the project?	___	✓
(j)	Do essential public services or facilities presently exist at or near the site?	✓	___
(k)	Will the project involve surface or subsurface liquid waste disposal?	___	✓
(l)	Will the project involve transport, storage, treatment or disposal of solid waste or hazardous materials?	___	✓
(m)	Will the project involve shipment or storage of petroleum products?	___	✓
(n)	Will the project involve the discharge of toxics, hazardous substances or other wastes or pollutants into coastal waters?	___	✓
(o)	Will the project involve or change existing ice management practices?	___	✓
(n)	Will the project alter drainage flow, patterns or surface water runoff on or from the site?	✓	___
(p)	Will best management practices be utilized to control storm water runoff into waterfront waters?	✓	___
(q)	Will the project cause emissions that would exceed federal or State air quality standards or generate significant amounts of nitrates or sulfates?	___	✓
(r)	Will the project affect any area designated as a tidal or freshwater wetland?	___	✓
(s)	Will the project utilize or affect the quality or quantity of sole source or surface water supplies?	___	✓

D. **REMARKS OR ADDITIONAL INFORMATION TO SUPPORT OR DESCRIBE ANY ITEM(S) CHECKED "YES"** (Add any additional sheets necessary)

See attached.

If you require assistance or further information in order to complete this form, please contact the City Planning Department.

Please submit completed form, along with one copy of a site/sketch plan to:

City of Poughkeepsie
Building, Planning, and Zoning Department
City Hall-2nd Floor
62 Civic Center Plaza
Poughkeepsie, NY 12601

Preparer's Name (Please print) : Natalie Quinn

Affiliation: KARC Planning Consultants, agent for applicant

Telephone Number: (845) 874-7166

Date: 9/30/2025

National Flood Hazard Layer FIRMette

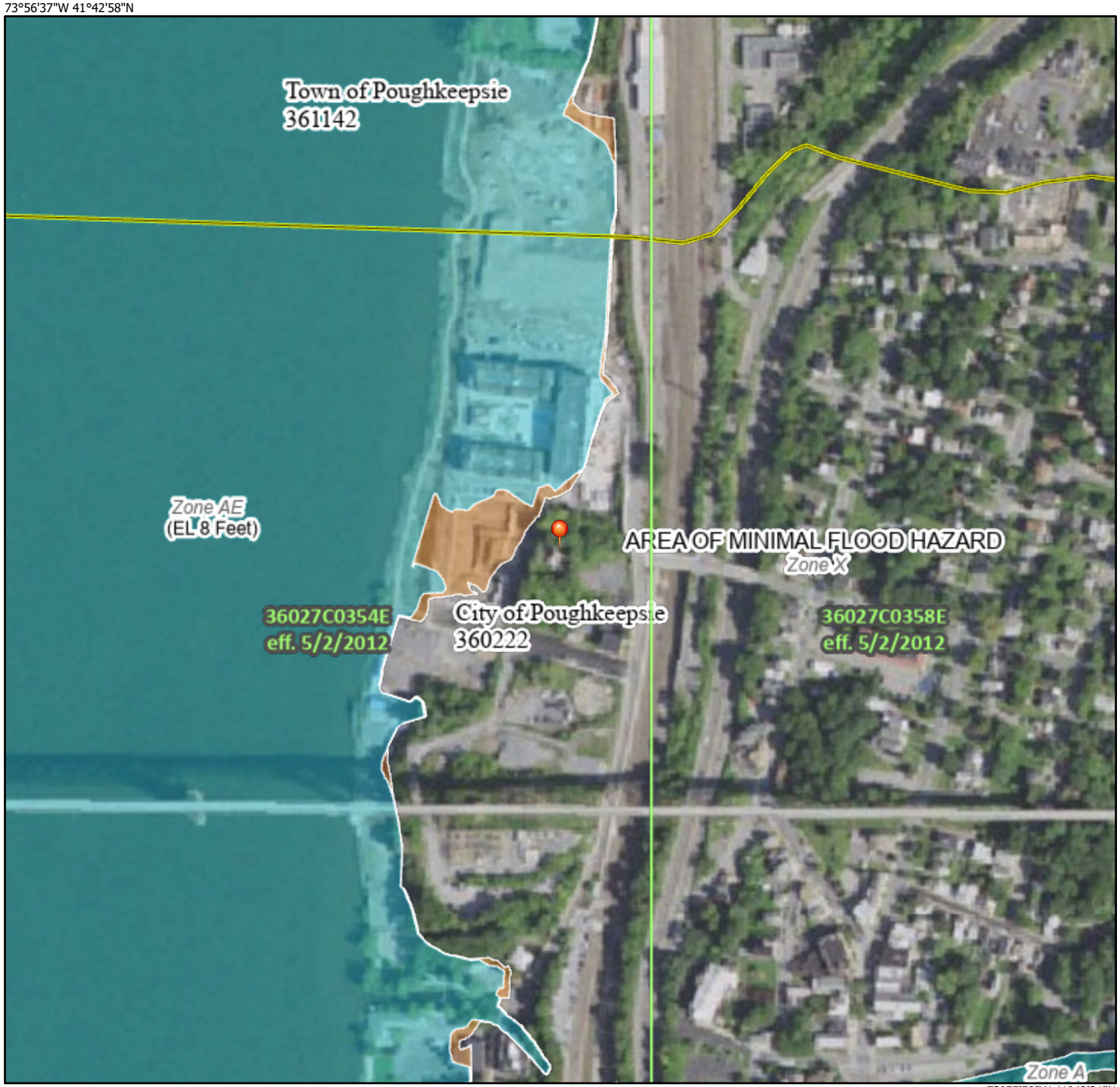

Basemap Imagery Source: USGS National Map 2023

Legend

SEE FIS REPORT FOR DETAILED LEGEND AND INDEX MAP FOR FIRM PANEL LAYOUT

SPECIAL FLOOD HAZARD AREAS
- Without Base Flood Elevation (BFE) *Zone A, V, A99*
- With BFE or Depth *Zone AE, AO, AH, VE, AR*
- Regulatory Floodway

OTHER AREAS OF FLOOD HAZARD
- 0.2% Annual Chance Flood Hazard, Areas of 1% annual chance flood with average depth less than one foot or with drainage areas of less than one square mile *Zone X*
- Future Conditions 1% Annual Chance Flood Hazard *Zone X*
- Area with Reduced Flood Risk due to Levee. See Notes. *Zone X*
- Area with Flood Risk due to Levee *Zone D*

OTHER AREAS
- NO SCREEN Area of Minimal Flood Hazard *Zone X*
- Effective LOMRs
- Area of Undetermined Flood Hazard *Zone D*

GENERAL STRUCTURES
- Channel, Culvert, or Storm Sewer
- Levee, Dike, or Floodwall

OTHER FEATURES
- 20.2 / 17.5 Cross Sections with 1% Annual Chance / Water Surface Elevation
- Coastal Transect
- Base Flood Elevation Line (BFE)
- Limit of Study
- Jurisdiction Boundary
- Coastal Transect Baseline
- Profile Baseline
- Hydrographic Feature

MAP PANELS
- Digital Data Available
- No Digital Data Available
- Unmapped

N

The pin displayed on the map is an approximate point selected by the user and does not represent an authoritative property location.

This map complies with FEMA's standards for the use of digital flood maps if it is not void as described below. The basemap shown complies with FEMA's basemap accuracy standards

The flood hazard information is derived directly from the authoritative NFHL web services provided by FEMA. This map was exported on 7/11/2025 at 4:19 PM and does not reflect changes or amendments subsequent to this date and time. The NFHL and effective information may change or become superseded by new data over time.

This map image is void if the one or more of the following map elements do not appear: basemap imagery, flood zone labels, legend, scale bar, map creation date, community identifiers, FIRM panel number, and FIRM effective date. Map images for unmapped and unmodernized areas cannot be used for regulatory purposes.

Poughkeepsie NRI Map



7/14/2025, 9:12:16 AM

1:2,257

0 0.02 0.04 0.08 mi

0 0.03 0.07 0.13 km

Parcel Boundaries

City of Poughkeepsie Boundary

Wetlands

Hudsonia Habitats

Developed

Cultural

Hudson River

Subtidal shallows

Estuarine rocky shore

Upland hardwood forest

Waste ground

Maxar, Microsoft, Sources: Esri, TomTom, Garmin, FAO, NOAA, USGS, © OpenStreetMap contributors, and the GIS User Community

Maxar, Microsoft | Esri Community Maps Contributors, © OpenStreetMap, Microsoft, Esri, TomTom, Garmin, SafeGraph, GeoTechnologies, Inc, METI/NASA, USGS, EPA, NPS, US Census Bureau, USDA, USFWS |

KARC
PLANNING CONSULTANTS, INC.

City of Poughkeepsie
Building, Planning, and Zoning Department
62 Civic Center Plaza
Poughkeepsie, NY 12601

Re: 141 N Water Street
6062-59-771405
City of Poughkeepsie
Waterfront Assessment Form – Supplemental Responses and Consistency Review

Below please find supplemental responses to the Waterfront Assessment Form as well as additional narrative and photo documentation to show compliance with select policies from the LWRP that are applicable to this proposed development at 141 N Water Street.

SUPPLEMENTAL RESPONSES TO WATERFRONT ASSESSMENT FORM
As requested within the Waterfront Assessment Form, please find the below supplemental responses for items that were answered "yes" as well as items that were answered "no" that the applicant would like to include supporting information for.

2.a. Will the proposed action have a significant effect upon scenic quality of the waterfront environment.

Response: The subject parcel is currently cleared, underutilized, and lacks notable visual appeal. As it stands, the site does not contribute positively to the aesthetic character of the waterfront or surrounding area.

The proposed development is designed to be consistent with the city's zoning code as well as the scale and architectural context of nearby newer construction buildings. By introducing a thoughtfully designed structure, the project will enhance the visual quality of the site and its surroundings. The new building is expected to improve the overall appearance of the waterfront area, replacing a visually unremarkable lot with a structure that contributes to the built environment in a positive and contextual way.

3.h. Will the proposed action involve or result in development within a designated flood or erosion hazard area?

Response: The proposed action is not within a designated flood zone, floodway, 100-year or 500-year floodplain. See attached FEMA Flood Map. The subject property sits upon a bluff, over 40 ft above the Hudson River shoreline.

3.i. Will the proposed action involve or result in development on a beach, dune, bluff or other natural feature that provides protection against flooding or erosion?

Response: The proposed development is located on top of a rock bluff overlooking the Hudson River. Risk of erosion from flooding is minimal as the development is not located in a flood zone. Additionally, the development proposal includes stormwater management practices to protect against flooding and erosion on site. A drainage report has been included with the submission materials for this project.

4.d. Does the project presently offer or include scenic views or vistas that are known to be important to the community?

Response: The project site is not contained within a designated scenic viewshed. However, view of the Walkway Over the Hudson and the Highland Bluffs are visible from within the site. The project team has designed communal rooftop space and outdoor open space so that future residents will have access to these iconic Poughkeepsie views.

4.i. Will any mature forest (over 100 years old) or other locally important vegetation be removed from the project?

Response: The property is largely cleared for construction and does not have mature forests or locally important vegetation. Please see attached Habitat map from the City of Poughkeepsie Natural Resource Inventory.

4.j. Do essential public services or facilities exist at or near the site?

Response: The site is served by the City of Poughkeepsie Police and City of Poughkeepsie Fire Department. Mid Hudson Regional Hospital is within 0.65 miles from the site.

4.n. Will the project alter drainage flow, patterns or surface water runoff on or from the site?

Response: Stormwater runoff will be managed onsite. In fact, the design of a new stormwater management system onsite will reduce post-development runoff from what is currently flowing off the site in its current state. Please see the submitted site plan and Drainage Report for proposed stormwater management plans.

4.p. Will best management practices be utilized to control storm water runoff into waterfront waters?

Response: Stormwater Management Design has the purpose of improving the quality of surface water runoff from all impervious areas and providing retention for increased runoff quantities

that may occur. Due to the fact that the proposed project sits on top of a rock bluff, green infrastructure technologies such as bioswales or rain gardens are not feasible as there is no where for the water to infiltrate. Thus, the appropriate methodology to manage stormwater onsite is to capture and treat runoff via the proposed underground chambers. Please see the submitted Site Drainage Plan (SD-1) within the site plan set and Drainage Report for proposed stormwater management plans.

LWRP POLICY CONSISTENCY

Policy 1: Restore, revitalize, and redevelop deteriorated and underutilized waterfront areas for commercial, industrial, cultural, recreational, and other compatible uses.

The subject parcel is presently cleared, vacant and underutilized, with limited visual appeal. As it stands, the site does not contribute positively to the aesthetic character of the waterfront or surrounding area. We believe the proposed project is consistent with Policy 1 in that it will redevelop a currently underutilized waterfront parcel and add much needed housing and parking within the waterfront area. Residential development is compatible with and essential to commercial and recreational uses in the waterfront area because new residents will frequent and support waterfront businesses while additional property tax revenue to the city can support park maintenance and improvements.

Policy 2 – 21: The project is either consistent or not applicable with policies 2 through 21

Policy 22: Development when located adjacent to the shore will provide for water-related recreation whenever such use is compatible with reasonably anticipated demand for such activities, and is compatible with the primary purpose of the development.

The proposed 56-unit residential development is in a position to support water-related recreation along the Hudson River. The project will introduce new residents within walking distance of the City's waterfront walkways and open spaces, increasing regular use and ensuring these resources remain active and well utilized. However, due to the project's location on top of a bluff 40 feet above the shoreline, the property is not physically suited to provide water-related recreational uses.

The project does not conflict with or restrict recreational access to the waterfront. Instead, it reinforces the investment in these amenities by providing a new residential base that will benefit from them and advance the goal of promoting water-related recreation along the Hudson River.

Policy 23: Protect, enhance and restore structures, districts, areas or sites that are of significance in the history, architecture, archaeology or culture of the State, its communities, or the Nation.

The main historic resource within 500 feet of the proposed development is the Walkway Over the Hudson, a nationally significant structure and cultural destination. The project site is visible from the Walkway; however, the building has been carefully designed to ensure compatibility with the setting and views from this historic resource. Other historic resources, such as Upper Landing Park and the Hoffman House are over 900 ft from the project site and not visible from the site.

The proposed 56-unit residential building incorporates appropriate scale, massing, and modern architectural design that complements the surrounding urban fabric without detracting from the visual prominence or integrity of the Walkway. The project does not alter the structure or function of the Walkway, nor does it impede public access or diminish the cultural experience it provides.

Policy 24: Prevent impairment of scenic resources of statewide significance.

The Walkway Over the Hudson is recognized as both a historic and scenic resource of statewide significance, providing expansive views of the Hudson River, surrounding landscape, and City of Poughkeepsie. The proposed 56-unit residential development is located within view of the Walkway; however, it has been designed in a manner that avoids impairment of the scenic quality of this resource. The building's siting and scale are consistent with the surrounding urban waterfront context and do not obstruct or diminish the expansive river and landscape views that define the scenic character of the Walkway. Rather than impairing scenic quality, the project contributes to the ongoing revitalization of the City's waterfront in a manner that highlights the Hudson River as the defining feature of the landscape.



Image 1: View from the Walkway Over the Hudson looking North toward 141 North Water Street.

The LWRP identifies several additional scenic resources from which the proposed project may be partially visible at certain times of year; however, given the distance between these resources and the project site, it is unlikely that the development will result in any impairment of views.

Policy 25: Protect, restore or enhance natural and man-made resources which are not identified as being of statewide significance, but which contribute to the overall scenic quality of the coastal area.

As stated in the LWRP, the goal of this policy is to protect views of the Hudson River, the valley and the wooded bluffs of the Esopus/Lloyd SASS as viewed from the immediate riverfront and City parks. The proposed development has been designed to respect and maintain the scenic quality of local resources that contribute meaningfully to the character of the City of Poughkeepsie. The project's location within the urban waterfront context ensures that it will appear as a compatible addition to the existing built environment, without encroaching upon or diminishing river or bluff views that define the area's scenic quality. By replacing an underutilized parcel with a thoughtfully designed residential building, the project enhances the overall appearance of the site while maintaining the integrity of surrounding viewsheds.

Below are photos taken towards the project site from areas of local significance identified in Figure II-9 of the LWRP:



Image 2: View from Kaal Rock Park looking North toward 141 North Water Street.



Image 3: View from Kaal Rock Point looking North toward 141 North Water Street.



Image 4: View from the Mid-Hudson Bridge looking North toward 141 North Water Street.



Image 5: View from the Walkway Over the Hudson looking North toward 141 North Water Street.



Image 6: View from Railroad Track Overpass looking North toward 141 North Water Street.



Image 7: View from Waryas Park looking North toward 141 North Water Street.



Image 8: View from Our Lady of Mount Carmel looking Northwest toward 141 North Water Street.



Image 9: View from the middle of the Hudson River looking East toward a rendered 141 North Water Street.

Policy 26 – 32: The project is either consistent or not applicable with policies 26 through 32

Policy 33: Best management practices will be used to ensure the control of stormwater runoff and combined sewer overflows draining into coastal waters.

Stormwater runoff will be managed onsite. In fact, the design of a new stormwater management system onsite will reduce post-development runoff from what is currently flowing off the site in its current state. Stormwater Management Design has the purpose of improving the quality of surface water runoff from all impervious areas and providing retention for increased runoff quantities that may occur. Due to the fact that the proposed project sits on top of a rock bluff, green infrastructure technologies such as bioswales or rain gardens are not feasible as there is no where for the water to infiltrate. Thus, the appropriate methodology to manage stormwater onsite is to capture and treat runoff via the proposed underground chambers. Please see the submitted Site Drainage Plan (SD-1) within the site plan set and Drainage Report for proposed stormwater management plans.

Stormwater and sewer will be directed to separate systems, so there will be no impact on combined sewer overflows.

Policy 34 – 44: The project is either consistent or not applicable with policies 34 through 44

KARC
PLANNING CONSULTANTS, INC.

January 13, 2026

Anne Saylor, Planning Board Chair
62 Civic Center Plaza
Poughkeepsie, NY 12601

Lori Garcia, Board Administrative Assistant
62 Civic Center Plaza
Poughkeepsie, NY 12601

Re: 141 N Water Street
6062-59-771405
City of Poughkeepsie
Site Plan Application

Dear Chair Saylor and Ms. Garcia:

As you are aware, the applicant is seeking to develop a 5-story residential structure with accessory parking at 141 N Water Street (Parcel #771405). The property is 1.028 acres and is located in the Waterfront (W) Zoning district.

The applicant is proposing a 56-unit residential development with 70 parking spaces, and residential amenities including a rooftop terrace, outdoor open space, bike parking, and a gym. The proposed structure is a 5-story building with one level of underground parking. Levels 0 and 1 are designed as structured parking facilities supporting the residential use, while Levels 2 through 5 would contain residential units configured as follows:

Unit Type	Unit Count
Studio	11
One-Bed	19
Two-Bed	26
Total	**56**

Only minor refinements have been made to the elevations since our last meeting per discussion with the Board's Architectural Consultant:

- Brise-Soleil added to the penthouse window expanse.
- Glass is anti-reflection (refer to materials board in the partial massing study provided)
- All metals are powder coated (refer to materials board in the partial massing study provided)

Below please find responses to comments prepared by the City of Poughkeepsie Engineering Department, dated December 9, 2025:

1. *Verify water supply is sufficient for fire and domestic use. Flow data for the hydrant adjacent to the site is available from the Fire Department. Finalize engineer's report to include a discussion of flow data from the adjacent hydrant.*

   Response: Please see the revised Engineer's Report provided with this submission.

Below please find responses to comments prepared by Metro-North Railroad, dated December 9, 2025. The Applicant is in direct contact with Metro-North to address their concerns and provide additional information as needed.

- *Kindly identify/include details and locations/sitings of fuel and/or battery energy storage system for backup generators (if any) on site.*

  Response: No fuel storage and/or battery storage systems for backup generators are proposed on site.

- *Plans that show location, size, construction and character of the means of egress along the ROW (if any) must be provided for Metro-North's review and approval.*

  Response: The curb cut and site entry currently exist and are proposed to be formalized (new apron, paving, etc.). Updated application materials have been forwarded to Metro-North for review.

- *The applicant should be made aware that due to the proximity of the site to Metro-North's right-of-way, entry permits from Metro-North may be required for construction. Additionally, the construction means and methods as well as storm water management plans and calculations, drainage, soil erosion and sediment control plans, site preparation and other plans must be reviewed and approved by Metro-North. Should excavation and/or blasting be required, Metro-North's specifications must be used. Entry permit and insurance requirements can be obtained by contacting Christopher Norris, Director, Individuals & Corporations at CNorris@mnr.org.*

  Response: The curb cut and site entry currently exist and are proposed to be formalized (new apron, paving, etc.).

- *Questions 8 b (page 2 of 3) – In response to question "Are public transportation services available at or near the stie of the proposed action?" applicant responded "no" but site is within half mile/10-minute walk of Metro-North's Poughkeepsie station, accessible via Water St.*

  Response: Noted. The City of Poughkeepsie Planning Board adopted a Negative SEQRA Declaration at their November 19, 2025 meeting.

- *Question 8 c (page 2 of 3) – In response to question "Are any pedestrian accommodations or bicycle routes available on or near the site of the proposed action?" applicant responded "no" but site is immediately adjacent to public sidewalk, walking bike paths along the waterfront, and the Walkway over the Hudson.*

  Response: Noted. The City of Poughkeepsie Planning Board adopted a Negative SEQRA Declaration at their November 19, 2025 meeting.

- *The proposer should consider integration of amenities and site design in order to take advantage of proximity to Metro-North station and nearby recreational amenities.*

  Response: The development directly connects to existing sidewalks which provide access to the Metro-North Poughkeepsie station via Water Street.

- *Question 12 – The applicant answered "yes" to the question regarding if the site is substantially contiguous to a building, archaeological site or district which is listed on the National or State Register of Historic Places or that has been determined by the Commissioner of the NYS Office of Parks, Recreation, and Historic Preservations to be eligible for listing on the State Register of Historic Places, but does not indicate which it is.*

  Response: The Applicant received a Letter of No Impact from the New York State Office of Parks, Recreation, and Historic Preservation on October 30, 2025 which was forwarded to the Planning Board ahead of the adoption of a Negative SEQRA Declaration at their November 19, 2025 meeting.

- *Question 17 (page 3 of 3) indicated that stormwater will be managed on site per a drainage report. Metro-North requests a copy of such be sent to Kevin Kenny P.E., Sr. Engineer-Hydrology at kkenny@mnr.org.*

  Response: Application materials have been forwarded to Metro-North.

KARC
PLANNING CONSULTANTS, INC.

Enclosed please find the following:

1. Cover Letter with responses to comments
2. Revised Engineer's Report
3. Revised partial Massing Study

We kindly request to discuss this matter at the January 27, 2026 Planning Board Meeting. Please advise if you require anything further.

Thank you.
Sincerely,

_____
Natalie Quinn, Agent for Applicant

PO Box 924 |Poughkeepsie NY 12602 | 845.874.7166 | natalie@karcpc.com
DBE Certified |WBE in NY and NJ |US SBA WOSB & EDWOSB Certified

SITE PLAN SUBMISSION SET

WATER STREET DEVELOPMENT

141 NORTH WATER STREET
CITY OF POUGHKEEPSIE, DUTCHESS COUNTY, NEW YORK

TAX MAP ID# 6062-59-771405

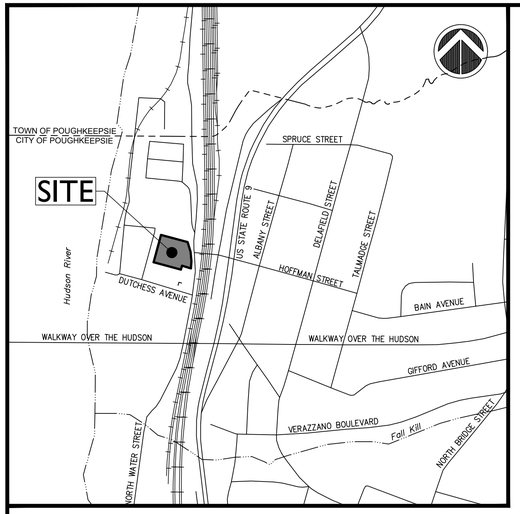

LOCATION MAP

SCALE: 1"=500'



VICINITY MAP

SCALE: 1"=200'

REVISED: DECEMBER 3, 2025

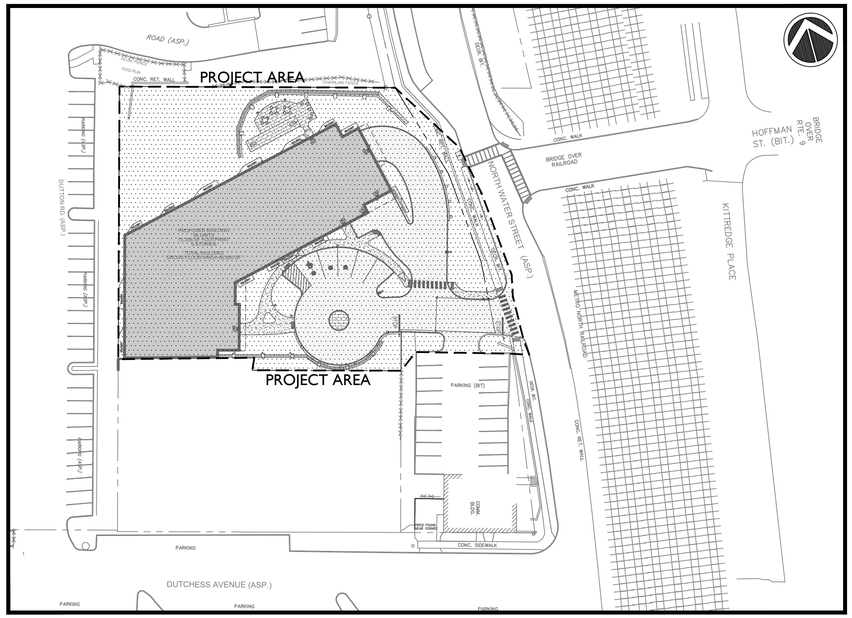

OVERALL SITE PLAN

SCALE: 1"=50'

CITY PLANNING BOARD
CITY OF POUGHKEEPSIE, NEW YORK
SITE PLAN APPROVAL
FILE NO:
PROJECT NAME:
PROJECT LOCATION:
APPLICANT:
OFFICIALLY APPROVED AT THE PLANNING BOARD
MEETING HELD THE _____DAY OF_____2_____
PLANNING CHAIR:
DESIGNEE:
DATE SIGNED:
CONDITION(S)

FIRE CHIEF

POLICE CHIEF

BUILDING INSPECTOR

CITY ENGINEER

COMMISSIONER OF PUBLIC WORKS

INDEX OF DRAWINGS

CV-1	COVER SHEET
EX-1	EXISTING CONDITIONS (UNDER SEPARATE COVER)
DM-1	DEMOLITION PLAN
SP-1	SITE PLAN
SG-1	SITE GRADING PLAN
SD-1	SITE DRAINAGE PLAN
UT-1	SITE UTILITIES
EC-1	EROSION AND SEDIMENTATION CONTROL PLAN
LL-1	PLANTING PLAN & DETAILS
LP-1	SITE LIGHTING PLAN
TT-1	TRUCK TURNING PLAN
DN-1	SITE DETAILS
DN-2	SITE DETAILS
DN-3	WATER / SANITARY DETAILS
DN-4	STORMWATER DETAILS
DN-5	EROSION CONTROL DETAILS
DN-6	SC-800 STANDARD DETAIL
S010	RETAINING WALL
S011	RETAINING WALL DETAILS

CIVIL ENGINEER:

LRC Engineering & Surveying

- Civil Engineering
- Land Surveying
- Landscape Architecture
- Land Planning
- Laser Scanning & BIM
- Subsurface Utility Engineering

Land Resource Consultants
Engineering & Surveying, LLC
D.B.A. Loureiro NY, P.C.

85 Civic Center Plaza, Suite 204
Poughkeepsie NY 12601
Tel: 845.243.2880

160 West Street, Suite E
Cromwell, CT 06416
Tel: 860.635.2877

www.lrcconsult.com

STATE OF NEW YORK
RODNEY E. MORRISON
074194
LICENSED PROFESSIONAL ENGINEER

Rodney Morrison P.E. #074194

OWNER / APPLICANT:

141 NORTH WATER STREET LLC
135 NORTH WATER STREET
POUGHKEEPSIE, NY 12601

PLANNER:

KARC
PO BOX 924
POUGHKEEPSIE, NY 12602

KARC
PLANNING CONSULTANTS, INC.

ARCHITECT:

ADG ARCHITECTS
25 WALLKILL AVENUE
MONTGOMERY, NY 12549
845-294-2724

ADG ARCHITECTS

SURVEYOR:

LARRY L. LYNN, LAND SURVEYOR, PC
66 MIDDLEBUSH RD, SUITE G107
WAPPINGERS FALLS, NY 12590
845-463-2733

REVISION NOTE #3: 2025-12-03
REVISION NOTE #2: 2025-09-30
REVISION NOTE #1: 2025-09-09
ORIGINALLY SUBMITTED: 2025-07-22

CV-1

SHEET 1 OF 16

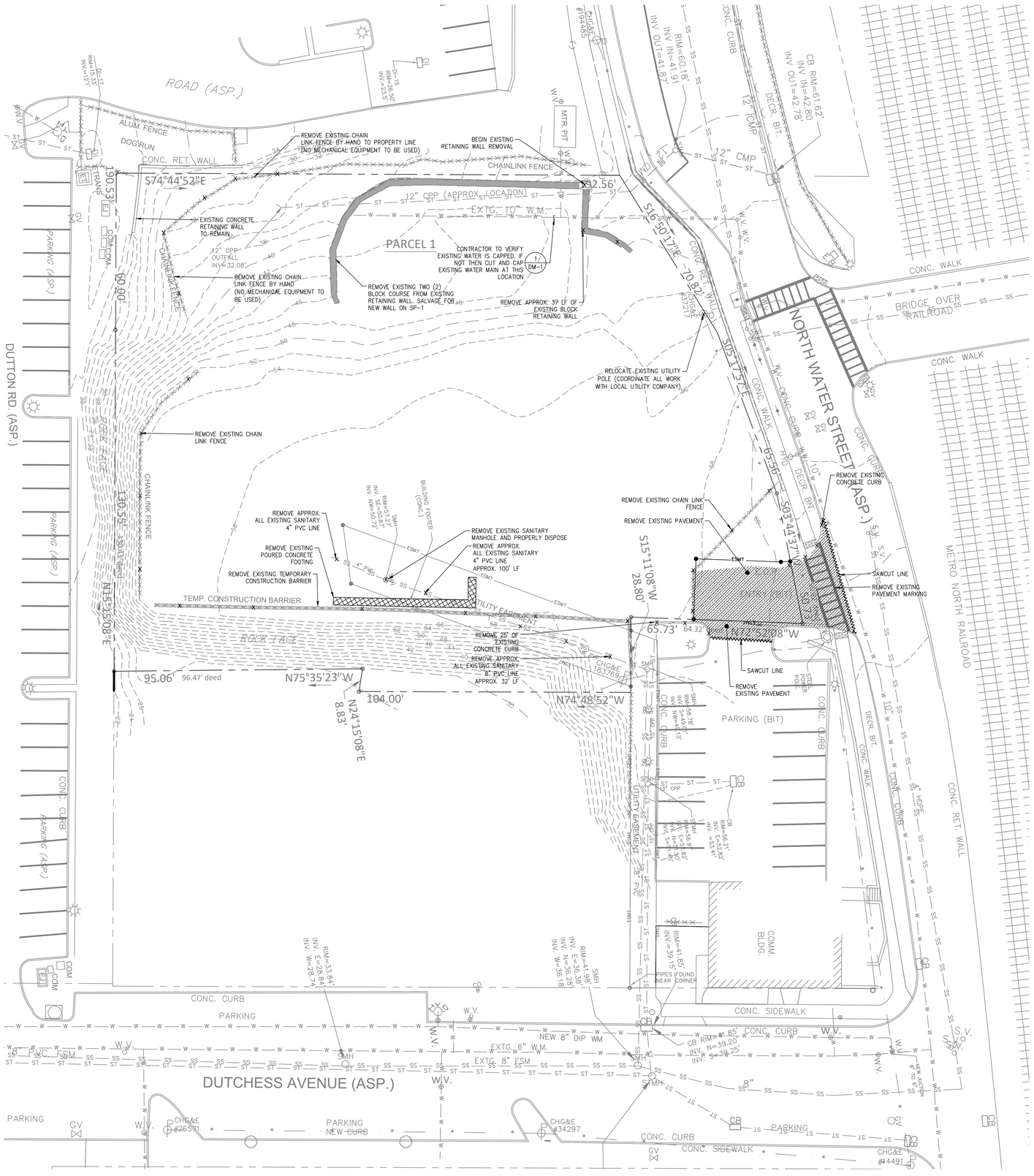

LEGEND

——— — — ———	EXISTING PROPERTY LINE
XXXXXXXXX	ITEM(S) TO BE REMOVED
~~	SAWCUT LINE
▨▨▨▨▨▨▨▨▨▨	BUILDING/STRUCTURE TO BE REMOVED
▨▨▨▨▨▨▨▨▨▨	WALK / DRIVE TO BE REMOVED

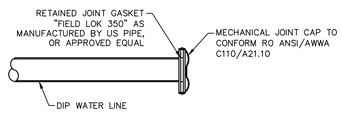

1 CAPPED END FOR DIP WATERMAIN DETAIL
SCALE: N.T.S.

DEMOLITION NOTES:

1. CONTRACTOR SHALL NOTIFY "UDig NY" AT 1-800-962-7962 AT LEAST TWO FULL WORKING DAYS PRIOR TO COMMENCEMENT OF ANY WORK IN ACCORDANCE WITH UFPO CODE RULE 53, 16 NYCRR PART 753.
2. ANY ITEM THAT MAY CONFLICT WITH SITE DEVELOPMENT AND IS NOT IDENTIFIED ON THIS PLAN SHALL BE BROUGHT TO THE ATTENTION OF THE OWNER AND DESIGN ENGINEER AS SOON AS POSSIBLE.
3. ADDITIONAL UNDERGROUND FACILITIES MAY BE PRESENT WITHIN THE LIMITS OF THE PROPOSED WORK. THE CONTRACTOR SHALL CONTACT ANY AND ALL PERSONNEL RESPONSIBLE FOR DETERMINING THE LOCATIONS.
4. CONFORM TO APPLICABLE CODE FOR DEMOLITION OF STRUCTURES, SAFETY OF ADJACENT STRUCTURES, DUST CONTROL, RUNOFF CONTROL, AND HAULING, DISPOSAL AND STORAGE OF DEBRIS.
5. PROVIDE, ERECT, AND MAINTAIN TEMPORARY BARRIERS AND SECURITY DEVICES.
6. MAINTAIN EXISTING UTILITIES TO REMAIN IN SERVICE AND PROTECT THEM AGAINST DAMAGE DURING SELECTIVE DEMOLITION OPERATIONS. DO NOT INTERRUPT EXISTING UTILITIES SERVING OPERATING FACILITIES, EXCEPT WHEN AUTHORIZED IN WRITING BY OWNER AND AUTHORITIES HAVING JURISDICTION.
7. WHEN DISTURBED, EXISTING FACILITIES SHALL BE REPAIRED OR REPLACED IN KIND AND IN ACCORDANCE WITH THE REQUIREMENTS OR THE DIRECTION OF THE AUTHORITY HAVING JURISDICTION. ASSOCIATED COSTS SHALL BE BORNE BY THE CONTRACTOR.
8. LOCATE AND IDENTIFY ALL EXISTING UTILITIES WITHIN THE CONSTRUCTION AREA. DISCONNECT AND SEAL OR CAP OFF UTILITY SERVICES THAT WILL BE AFFECTED BY THIS PROJECT. NOTIFY AFFECTED UTILITY COMPANIES BEFORE STARTING WORK AND COMPLY WITH THEIR REQUIREMENTS. VERIFY THAT UTILITIES HAVE BEEN DISCONNECTED AND CAPPED.
9. DEMOLISH AND REMOVE COMPONENTS IN AN ORDERLY AND CAREFUL MANNER.
10. PROTECT EXISTING FEATURES THAT ARE NOT TO BE DEMOLISHED.
11. CONDUCT OPERATIONS WITH MINIMUM INTERFERENCE TO PUBLIC OR PRIVATE ACCESS WAY.
12. MAINTAIN EGRESS AND ACCESS AT ALL TIMES. DO NOT CLOSE OR OBSTRUCT ROADWAYS, OR SIDEWALKS WITHOUT PERMITS.
13. CEASE OPERATIONS IMMEDIATELY IF ADJACENT STRUCTURES APPEAR TO BE IN DANGER. NOTIFY AUTHORITY HAVING JURISDICTION.
14. ROUGH GRADE AND COMPACT AREAS AFFECTED BY DEMOLITION TO MAINTAIN SITE GRADES AND CONTOURS.
15. FIELD VERIFY EXISTING CONDITIONS AND CORRELATE WITH REQUIREMENTS INDICATED ON DEMOLITION PLAN TO DETERMINE EXTENT OF SELECTIVE DEMOLITION REQUIRED.
16. MAINTAIN EXISTING UTILITIES TO REMAIN IN SERVICE AND PROTECT THEM AGAINST DAMAGE DURING SELECTIVE DEMOLITION OPERATION.
17. CONDUCT SELECTIVE DEMOLITION OPERATIONS AND REMOVE DEBRIS TO ENSURE MINIMUM INTERFERENCE WITH WORK.
18. CONDUCT DEMOLITION OPERATIONS TO PREVENT INJURY TO PEOPLE AND DAMAGE TO ADJACENT BUILDINGS AND FACILITIES TO REMAIN. ENSURE SAFE PASSAGE OF PEOPLE AROUND SELECTIVE DEMOLITION AREA.
19. USE WATER MIST, TEMPORARY ENCLOSURES AND OTHER SUITABLE METHODS TO LIMIT THE SPREAD OF DUST AND DIRT. COMPLY WITH GOVERNING ENVIRONMENTAL PROTECTION REGULATIONS. DO NOT USE WATER WHEN IT MAY DAMAGE EXISTING CONSTRUCTION, SUCH AS ICE, FLOODING, OR POLLUTION.
20. REMOVE, TRANSPORT AND REMOVE DEBRIS IN A MANNER THAT WILL PREVENT SPILLAGE ON ADJACENT SURFACES AND AREAS AND MEET ALL APPROPRIATE DISPOSAL AND TRUCKING LAWS.
21. CLEAN ADJACENT STRUCTURES AND IMPROVEMENTS OF DUST, DIRT AND DEBRIS CAUSED BY SELECTIVE DEMOLITION OPERATIONS. RETURN ADJACENT AREAS TO CONDITION EXISTING BEFORE START OF SELECTIVE DEMOLITION.
22. PROMPTLY DISPOSE OF DEMOLISHED MATERIALS. ALL DEBRIS RESULTING FROM DEMOLITION ACTIVITIES SHALL BE DISPOSED OF OFF-SITE AT A FACILITY APPROVED TO RECEIVE THE DEBRIS. DO NOT ALLOW DEMOLISHED MATERIALS TO ACCUMULATE ON-SITE. DO NOT BURN DEMOLISHED MATERIALS ON-SITE.
23. A MINIMUM OF TEN FEET OF EXISTING PIPE SHALL BE REMOVED AROUND ALL EXISTING MANHOLES, WHERE NEW PIPES ARE PROPOSED TO CONNECT.
24. IF ANY STORM DRYWELLS OR PREVIOUSLY UNIDENTIFIED UNDERGROUND STRUCTURES ARE IDENTIFIED AND EXHIBIT A SEWAGE/SEPTIC ODOR NOTIFY SITE ENGINEER AND TREAT AS SANITARY WASTE FOR DISPOSAL.
25. NO BLASTING IS ALLOWED.
26. COORDINATE ALL WORK ON EXISTING ENTRANCE WITH ADJOINING PROPERTY OWNER.

BEFORE UNDERTAKING ANY DIGGING, DRILLING, BLASTING OR DISTURBANCE TO THE GROUND IN ANYWAY, FOR ANY REASON, ALL INDIVIDUALS MUST CONTACT DIG SAFELY NEW YORK AT 811 OR WWW.CALL811.COM

GRAPHIC SCALE
20 10 0 20
SCALE IN FEET

STATE OF NEW YORK — RODNEY E. MORRISON — LICENSED PROFESSIONAL ENGINEER — 074194

No.	Revisions
1.	2025-09-09 SITE PLAN FOR ZBA SUBMISSION
2.	2025-09-30 CITY PLANNING BOARD SUBMISSION
3.	2025-12-03 CITY PLANNING BOARD SUBMISSION

LRC Engineering & Surveying
- Civil Engineering
- Land Surveying
- Landscape Architecture
- Land Planning
- Laser Scanning & BIM
- Subsurface Utility Engineering

Land Resource Consultants Engineering & Surveying, LLC
D.B.A. Lourenco NY, P.C.
85 Civic Center Plaza, Suite 204
Poughkeepsie NY 12601
Tel: 845.243.2880
160 West Street, Suite E
Cromwell, CT 06416
Tel: 860.635.2877
www.lrcconsult.com

DEMOLITION PLAN

WATER STREET DEVELOPMENT

141 NORTH WATER STREET
CITY OF POUGHKEEPSIE, DUTCHESS COUNTY, NEW YORK

Design/Calcs	BLS	CAD File	DM22298501.dwg
Drawn	SMC	Project No.	22-2985
Checked	KFC	Date	2025-07-22
Approved	LRC	Scale	1"=20'

Sheet No. DM-1 SHEET 2 OF 18

X:\JOBS\Jobs 2022\22-2985-141 North Water Street Pok-Sunrise Developers Corp\DWG\DM22298501.dwg 12/1/2025 9:56 AM SCurran

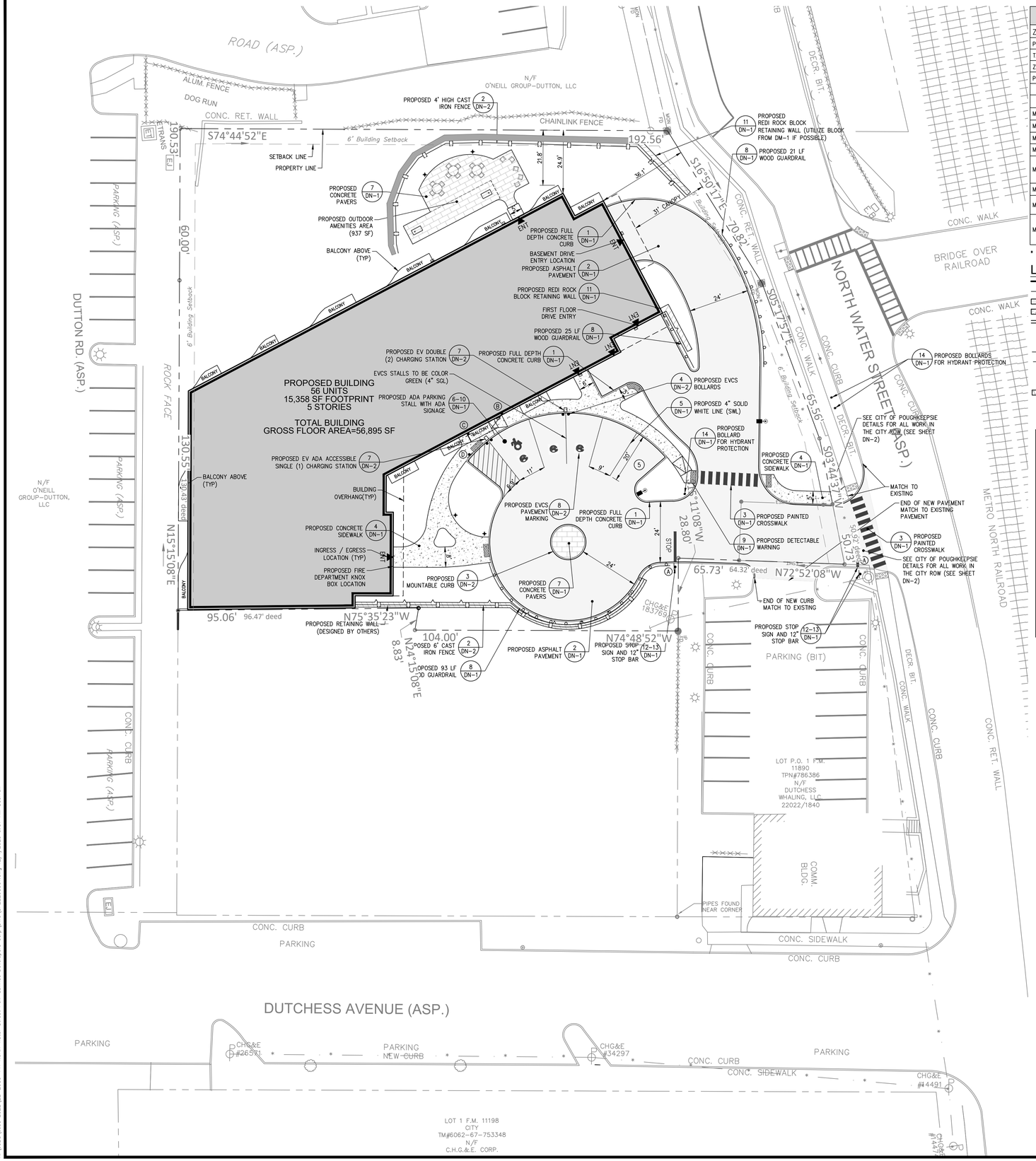

ZONING SUMMARY TABLE

ZONING INFORMATION	
PARCEL SIZE	1.028 ACRES TOTAL
TAX MAP IDENTIFICATION	6062-59-771405
ZONING DISTRICT	W – WATERFRONT
PROPOSED USE	RESIDENTIAL

ITEM	REQUIRED	EXISTING	PROPOSED
MINIMUM LOT AREA (SF)	NONE	1.028 ACRES	1.028 ACRES
MINIMUM LOT WIDTH (FT)	NONE	169 FT	169 FT
MAXIMUM LOT COVERAGE	50%	3.45%	65.39% *
MINIMUM LOT FRONTAGE (FT)	50 FT	187.11 FT	187.11 FT
MINIMUM REQUIRED YARDS	NONE IF PROVIDED, 6FT	N/A	36.1 FT (EAST) 24.9 FT (NORTH) 0 FT WEST / 0 FT SOUTH
MAXIMUM FAR	1.25	N/A	1.25
MAXIMUM HEIGHT	5 STORIES 60 FT	N/A	5 STORIES 59'-11 7/8"
MINIMUM PARKING	1.25 / UNIT 60 UNITS = 75 SPACES	NONE	BASEMENT=34 SPACES FIRST FLOOR=31 SPACES OUTSIDE=5 SPACES TOTAL=70 SPACES

* DENOTES VARIANCE REQUIRED

SEE ARCH PLANS FOR BASEMENT AND FIRST FLOOR PARKING LAYOUTS

LEGEND

- EXISTING PROPERTY LINE
- BUILDING SETBACK LINE
- PROPOSED ASPHALT SURFACE
- PROPOSED CONCRETE SIDEWALK
- PROPOSED CONCRETE CURB
- PROPOSED SIGN
- PROPOSED DOOR LOCATION
- PROPOSED FENCE
- PROPOSED GUARDRAIL
- PROPOSED CROSSWALK
- PROPOSED CONCRETE PAVERS
- PROPOSED BOLLARD LIGHT
- PROPOSED LIGHTPOLE

SIGN LEGEND

NO.	LEGEND	MUTCD DESIGNATION	DIMENSIONS	QTY.
A	STOP	R1-1	30" x 30"	2
B	RESERVED PARKING	R7-8	12" X 18"	1
C	NO PARKING ANYTIME	R7-1	12" X 18"	1
D	ACCESSIBLE PARKING USE LAST		12"X18"	1

NOTE: SIGNAGE TO BE CONSISTENT WITH TOWN/STATE AND MUTCD STANDARDS

EASEMENTS

ACCESS EASEMENT, AREA=0.021± ACRES

UTILITY EASEMENT, AREA=0.053± ACRES (FORMERLY PARCEL 2)

UTILITY EASEMENT, AREA=0.031± ACRES (FORMERLY PARCEL 2)

PROPOSED STORM WATER EASEMENT=.008± ACRES

NOTES:

1. EXISTING EASEMENTS ASSOCIATED WITH THIS PROJECT ARE SHOWN ON APPLICABLE PLAN SHEETS AND ARE LISTED ABOVE. ALL EXISTING EASEMENTS ARE PROVIDED ON THE PLAN SHEET ENTITLED "EXISTING CONDITIONS / TOPOGRAPHIC SURVEY".
2. NO EXISTING WATERCOURSES, MARCHES, WOODED AREAS, ROCK OUTCROPS, TREES WITH A DIA. OF 8" OR MORE ARE ASSOCIATED WITH THIS PROJECT.
3. SITE IS NOT IN FEMA 100 YEAR FLOODPLAIN
4. A FIRE DEPARTMENT KNOX BOX LOCATION IS PROVIDED AT THE SOUTHWEST ENTRY LOCATION.
5. MAINTENANCE RECORDS FOR STROMWATER PRACTICES SHALL BE SUBMITTED TO THE CITY ENGINEERING DEPARTMENT ON AN ANNUAL BASIS.

SURVEY MAP REFERENCE

EXISTING CONDITIONS / TOPOGRAPHIC INFORMATION TAKEN FROM PLAN ENTITLED "141 NORTH WATER STREET, LLC" DATED MAY 27, 2025 BY LARRY L. LYNN, LS, PLS# 050531

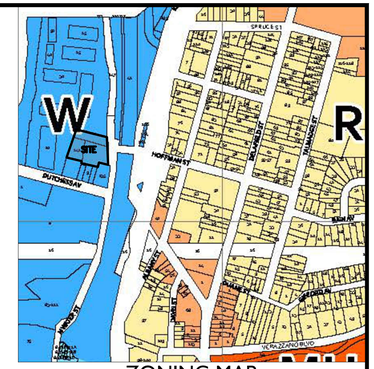
W
R
SITE
NORTH WATER
MAIN
BUTTERMILK
WASHINGTON
MARKET
CATHERINE
CHURCH
SCHATZELL
SCHATZELL
MORGAN
MORGAN
MARKET
HOWARD
HOWARD
MORGAN
MORGAN
MARKET
MARKET
MARKET

COMPACTION AND BACKFILL NOTES

UNLESS OTHERWISE SPECIFIED OR APPROVED BY THE SITE ENGINEER, ALL SITE SUBGRADE AND BACKFILL FOR ALL STRUCTURES INCLUDING, BUT NOT LIMITED TO, PARKING LOT SUBGRADE, ROAD SUBGRADE, CONCRETE PADS AND SIDEWALKS, WATER LINES AND STRUCTURES, SEWER LINES AND STRUCTURES, STORM LINES AND STRUCTURES, TRASH PADS/ENCLOSURES, AND SITE ELECTRICAL AND CONDUIT, SHALL BE COMPACTED IN ACCORDANCE WITH THE NEW YORK STATE DEPARTMENT OF TRANSPORTATION (NYSDOT) STANDARD FOR CONSTRUCTION AND MATERIALS, DATED JANUARY 1, 2022 AND ALL ADDENDA THERETO.

GRADING AND DRAINAGE NOTES

1. ANY DEMOLISHED OR CLEARED MATERIALS MUST BE REMOVED AND DISPOSED OF OFF SITE. ANY BURNING ON SITE SHALL BE SUBJECT TO LOCAL ORDINANCES. THESE INCLUDE ANY OBJECTS NOTED ON THE PLANS, INCLUDING BUT NOT LIMITED TO, TREES, STUMPS, FENCES, WALLS, ETC.
2. CONTRACTOR SHALL NOTIFY ALL UTILITY COMPANIES HAVING UNDERGROUND UTILITIES ON SITE OR IN THE RIGHT-OF-WAY PRIOR TO EXCAVATION. ALL UTILITIES MUST BE LOCATED AND MARKED OUT PRIOR TO THE START OF ANY SITE GRADING.
3. SITE GRADING SHALL NOT PROCEED UNTIL ALL EROSION CONTROL MEASURES HAVE BEEN INSTALLED AND INSPECTED.
4. CONTRACTOR TO FIELD VERIFY ALL EXISTING UTILITIES PRIOR TO THE START OF ANY CONSTRUCTION

LEGEND

- PROPERTY LINE
- 160 — EXISTING MAJOR CONTOUR
- 162 — EXISTING MINOR CONTOUR
- ×163.25 — EXISTING SPOT GRADE
- EXISTING CATCH BASIN
- EXISTING STORM LINE
- PROPOSED CATCH BASIN
- PROPOSED DRYWELL
- PROPOSED STORM LINE
- ×163.25 — PROPOSED SPOT GRADE

GRAPHIC SCALE

20 10 0 20

SCALE IN FEET

No.	Revisions
1.	2025-09-09 SITE PLAN FOR ZBA SUBMISSION
2.	2025-09-30 CITY PLANNING BOARD SUBMISSION
3.	2025-12-03 CITY PLANNING BOARD SUBMISSION

LRC Engineering & Surveying

- Civil Engineering
- Land Surveying
- Landscape Architecture
- Land Planning
- Laser Scanning & BIM
- Subsurface Utility Engineering

Land Resource Consultants Engineering & Surveying, LLC
D.B.A. Loureiro NY, P.C.

85 Civic Center Plaza, Suite 204
Poughkeepsie NY 12601
Tel: 845.243.2880

160 West Street, Suite E
Cromwell, CT 06416
Tel: 860.635.2877

www.lrcconsult.com

STATE OF NEW YORK — RODNEY E. MORRISON — 074184 — LICENSED PROFESSIONAL ENGINEER

SITE GRADING PLAN

WATER STREET DEVELOPMENT

141 NORTH WATER STREET
CITY OF POUGHKEEPSIE, DUTCHESS COUNTY, NEW YORK

Design/Calcs	BLS	CAD File	SG22298501.dwg	Sheet No.
Drawn	SMC	Project No.	22-2985	SG-1
Checked	KFC	Date	2025-07-22	SHEET 4 OF 18
Approved	LRC	Scale	1"=20'	

X:\JOBS\Jobs 2022\22-2985-141 North Water Street Pok-Sunrise Developers Corp\DWG\SG22298501.dwg 12/1/2025 9:38 AM SGorron

COMPACTION AND BACKFILL NOTES

UNLESS OTHERWISE SPECIFIED OR APPROVED BY THE SITE ENGINEER, ALL SITE SUBGRADE AND BACKFILL FOR ALL STRUCTURES INCLUDING, BUT NOT LIMITED TO, PARKING LOT SUBGRADE, ROAD SUBGRADE, CONCRETE PADS AND SIDEWALKS, WATER LINES AND STRUCTURES, SEWER LINES AND STRUCTURES, STORM LINES AND STRUCTURES, TRASH PADS/ENCLOSURES, AND SITE ELECTRICAL AND CONDUIT, SHALL BE COMPACTED IN ACCORDANCE WITH THE NEW YORK STATE DEPARTMENT OF TRANSPORTATION (NYSDOT) STANDARD FOR CONSTRUCTION AND MATERIALS, DATED JANUARY 1, 2022 AND ALL ADDENDA THERETO.

GRADING AND DRAINAGE NOTES

1. ANY DEMOLISHED OR CLEARED MATERIALS MUST BE REMOVED AND DISPOSED OF OFF SITE. ANY BURNING ON SITE SHALL BE SUBJECT TO LOCAL ORDINANCES. THESE INCLUDE ANY OBJECTS NOTED ON THE PLANS, INCLUDING BUT NOT LIMITED TO, TREES, STUMPS, FENCES, WALLS, ETC.
2. CONTRACTOR SHALL NOTIFY ALL UTILITY COMPANIES HAVING UNDERGROUND UTILITIES ON SITE OR IN THE RIGHT-OF-WAY PRIOR TO EXCAVATION. ALL UTILITIES MUST BE LOCATED AND MARKED OUT PRIOR TO THE START OF ANY SITE GRADING.
3. SITE GRADING SHALL NOT PROCEED UNTIL ALL EROSION CONTROL MEASURES HAVE BEEN INSTALLED AND INSPECTED.
4. CONTRACTOR TO FIELD VERIFY ALL EXISTING UTILITIES PRIOR TO THE START OF ANY CONSTRUCTION

LEGEND

- PROPERTY LINE
- EXISTING MAJOR CONTOUR
- EXISTING MINOR CONTOUR
- EXISTING SPOT GRADE
- EXISTING CATCH BASIN
- EXISTING STORM LINE
- PROPOSED CATCH BASIN
- PROPOSED DRYWELL
- PROPOSED STORM LINE

GRAPHIC SCALE
20 10 0 20
SCALE IN FEET

Revisions		
1.	2025-09-09	SITE PLAN FOR ZBA SUBMISSION
2.	2025-09-30	CITY PLANNING BOARD SUBMISSION
3.	2025-12-03	CITY PLANNING BOARD SUBMISSION

LRC Engineering & Surveying

- Civil Engineering
- Land Surveying
- Landscape Architecture
- Land Planning
- Laser Scanning & BIM
- Subsurface Utility Engineering

Land Resource Consultants Engineering & Surveying, LLC
D.B.A. Lorenzo N.Y. P.C.
85 Civic Center Plaza, Suite 204
Poughkeepsie NY 12601
Tel: 845.243.2880
160 West Street, Suite E
Cromwell, CT 06416
Tel: 860.635.2877
www.lrcconsult.com

SITE DRAINAGE PLAN

WATER STREET DEVELOPMENT

141 NORTH WATER STREET
CITY OF POUGHKEEPSIE, DUTCHESS COUNTY, NEW YORK

Design/Calcs	BLS	CAD File	SD22298501.dwg	Sheet No.
Drawn	SMC	Project No.	22-2985	SD-1
Checked	KFC	Date	2025-07-22	SHEET 5 OF 18
Approved	LRC	Scale	1"=20'	

STATE OF NEW YORK
RODNEY E. MORRISON
074184
LICENSED PROFESSIONAL ENGINEER

X:\JOBS\Jobs 2022\22-2985-141 North Water Street Pok-Sunrise Developers Corp\DWG\SD22298501.dwg 12/1/2025 10:52 AM Scurron



CITY OF POUGHKEEPSIE WATER NOTES

1. ALL WATER MAINS SHALL BE CEMENT LINED DUCTILE IRON PIPE, CLASS 52 PUSH-ON JOINT, UNLESS OTHERWISE SPECIFIED BY OR APPROVED BY THE CITY OF POUGHKEEPSIE WATER DEPARTMENT. JOINTING SHALL EMPLOY "MEGALUG" CONNECTIONS, FIELD LOCK GASKET, OR AS ALTERNATIVELY SPECIFIED BY THE CITY OF POUGHKEEPSIE WATER DEPARTMENT. ALL WATER PIPING CONSTRUCTION SHALL BE TO THE SPECIFICATIONS OF THE CITY OF POUGHKEEPSIE WATER DEPARTMENT. WET TAP OF PUBLIC WATER SYSTEM SHALL BE APPROVED AND SUPERVISED BY THE CITY OF POUGHKEEPSIE WATER DEPARTMENT. TAPPING SLEEVE SHALL BE STAINLESS STEEL OR APPROVED EQUAL. ALL MAINLINE VALVES SHALL BE RESILIENT WEDGE OR APPROVED EQUAL.
2. THE WATER LINE MAY BE FLEXED WITHIN PIPE SPECIFICATIONS OR LAID DEEPER IN AREAS WHERE A CROSSING WITH A SANITARY LINE OCCURS, TO ACHIEVE THE REQUIRED 1.5' VERTICAL SEPARATION DISTANCE. IF THIS DISTANCE CANNOT BE REASONABLY ACHIEVED, THE CONTRACTOR SHALL USE PRESSURE RATED SANITARY PIPE OF EQUAL OR GREATER RATING THAN THE PRESSURE CLASS FOR THE WATER LINE.
3. MINIMUM VERTICAL SEPARATION BETWEEN WATER MAINS AND SEWER PIPE SHALL BE 18 INCHES MEASURED FROM THE OUTSIDE OF THE PIPES AT THE POINT OF CROSSING. ONE FULL STANDARD LAYING LENGTH OF WATER MAIN SHALL BE CENTERED UNDER OR OVER THE SEWER SO THAT BOTH JOINTS WILL BE AS FAR FROM THE SEWER LINE AS POSSIBLE. IN ADDITION, WHEN THE WATER MAIN PASSES UNDER A SEWER, ADEQUATE STRUCTURAL SUPPORT (COMPACTED SELECT FILL) SHALL BE PROVIDED FOR THE SEWER TO PREVENT EXCESSIVE DEFLECTION OF JOINTS AND SETTLING OF THE SEWER PIPE ON THE WATER MAIN. MINIMUM HORIZONTAL SEPARATION BETWEEN PARALLEL WATER MAINS AND SEWER PIPES (INCLUDING MANHOLES AND VAULTS) SHALL BE 10 FEET MEASURED FROM THE OUTSIDE OF THE PIPES, MANHOLES, OR VAULTS.
4. ALL WATER MAINS SHALL HAVE A MINIMUM OF (5) FIVE FEET OF COVER FROM THE TOP OF THE MAIN TO FINISHED GRADE. THE CONTRACTOR SHALL CHECK ALL FINISHED GRADE STAKES BEFORE TRENCHING TO ENSURE THAT ALL INSTALLED WATER MAINS WILL HAVE THE REQUIRED COVER.
5. THE SUPPLIER OF WATER MUST RECEIVE AT LEAST 48-HOUR ADVANCE NOTIFICATION REQUESTING SAMPLING SERVICES. SAMPLING WILL NOT BE PERFORMED PRIOR TO RECEIPT FROM A NEW YORK STATE LICENSED OR REGISTERED DESIGN PROFESSIONAL (ENGINEER, ARCHITECT, OR LAND SURVEYOR WITH A SPECIAL EXEMPTION UNDER SECTION 7208(N) OF THE EDUCATION LAW) CERTIFYING THAT THE WATER SUPPLY IMPROVEMENTS, TESTING AND DISINFECTION PROCEDURES WERE COMPLETED IN ACCORDANCE WITH THE APPROVED PLANS, REPORTS, SPECIFICATIONS, AND ANY APPROVED AMENDMENTS. A NYSDOH CERTIFIED LABORATORY WILL COLLECT SAMPLES FOR FREE CHLORINE RESIDUAL, TOTAL AND FECAL COLIFORM AND 24-HOUR BACTERIAL PLATE COUNT. THE CERTIFICATE OF COMPLIANCE, TESTING, AND SAMPLING RESULTS SHALL BE PROVIDED TO THE CITY WATER MAINTENANCE SUPERVISOR AND DUTCHESS COUNTY DEPARTMENT OF HEALTH AS A CONDITION OF APPROVAL FOR OPERATION.
6. THE CONTRACTOR SHALL COORDINATE THE TESTING WITH THE WATER DEPARTMENT SO AS TO MAINTAIN THE AMOUNT OF SERVICE INTERRUPTION TO EXISTING USERS TO THE LEAST EXTENT PRACTICABLE. WATER MAIN INSTALLATION AND TESTING SHALL BE PERFORMED UNDER THE SUPERVISION OF THE PROJECT ENGINEER OR HIS DESIGNEE AS NECESSARY TO MEET CONDITIONS IN NOTE 5 ABOVE.
7. THE WATER MAIN SHALL BE PRESSURE LEAKAGE TESTED IN ACCORDANCE WITH THE MINIMUM REQUIREMENTS OF THE AWWA STANDARD C600 (LATEST REVISION) OR IN ACCORDANCE WITH MORE STRINGENT REQUIREMENTS IMPOSED BY THE SUPPLIER OF WATER. TEST TO FIRST VALVE WITHIN BUILDING.
8. THE WATER MAIN SHALL BE DISINFECTED EQUAL TO AWWA STANDARD FOR DISINFECTING WATER MAINS DESIGNATION C651 (LATEST REVISION). FOLLOWING DISINFECTION, THE WATER MAIN SHALL BE FLUSHED UNTIL THE CHLORINE CONCENTRATION IN THE WATER LEAVING THE MAIN IS NO HIGHER THAN THAT GENERALLY PREVAILING IN THE SYSTEM. THE PROJECT ENGINEER OR HIS DESIGNEE SHALL ALSO WITNESS DISINFECTION AND FLUSHING.
9. ALL WATER MAIN FITTINGS NOT RECEIVING 24-HOUR CHLORINE DISINFECTION CONTACT TIME MUST BE SWAB-DISINFECTED 30 MINUTES PRIOR TO INSTALLATION.
10. THE SAMPLING POINT(S) MUST BE DECONTAMINATED BY FLAMING.
11. FIRE HYDRANTS ARE NOT ACCEPTABLE SAMPLING POINTS, UNLESS OTHERWISE APPROVED BY SITE ENGINEER AND CITY OF POUGHKEEPSIE WATER DEPARTMENT.
12. FIRE HYDRANT WEEP HOLES (DRAINS) SHALL BE PLUGGED WHEN GROUND WATER IS ENCOUNTERED WITHIN SEVEN FEET OF THE FINISHED GRADE. WHEN DRAINS ARE PLUGGED, THE BARRELS MUST BE PUMPED DRY AFTER USE DURING FREEZING WEATHER. SUCH HYDRANTS SHALL BE IDENTIFIED BY MARKINGS AS APPROVED BY THE CITY OF POUGHKEEPSIE.
13. PROPOSED WATER METERS LOCATED WITHIN THE METER PIT OR BUILDING SHALL BE A COMPATIBLE REMOTE STYLE TYPE (SENSUS), AND SHALL BE APPROVED BY THE CITY OF POUGHKEEPSIE WATER DEPARTMENT PRIOR TO INSTALLATION. WATER METER SHALL BE EQUIPPED WITH (RADIO TYPE REMOTE READER) TRANSCEIVER PROVIDED BY METER MANUFACTURER AND INSTALLED AND PROGRAMMED BY THE CITY OF POUGHKEEPSIE WATER DEPARTMENT.
14. THE WATER LINE SHALL BE INSTALLED AT A CONTINUOUS GRADE WITH NO ABRUPT HIGH POINTS OR LOW POINTS.
15. FINAL WATER DISTRIBUTION SYSTEM AND CERTIFICATION IS SUBJECT TO REVIEW, REVISION AND APPROVAL BY THE CITY OF POUGHKEEPSIE WATER DEPARTMENT AND THE DCDOH PRIOR TO APPROVAL TO OPERATE.
16. ALL WATER MAINS AND RELATED APPURTENANCES SHALL BE CONSTRUCTED TO THE LATEST STANDARDS AND SPECIFICATIONS OF THE CITY OF POUGHKEEPSIE.
17. THE WATER MAIN SHALL NOT BE PLACED INTO SERVICE UNTIL SO AUTHORIZED BY THE CITY OF POUGHKEEPSIE.
18. ALL WATER SERVICE CONSTRUCTION SHALL BE SUBJECT TO INSPECTION BY THE CITY WATER DEPARTMENT PRIOR TO BACKFILLING. BEDDING AND PIPE ZONE MATERIAL SHALL BE COMPOSED OF CRUSHED STONE OR LIGHT GRAVEL HAVING A GRADATION LIMIT OF 3/4" MINUS. AN ACCEPTABLE MATERIAL SHALL MEET THE FOLLOWING REQUIREMENT:

SIEVE DESIGNATION	% PASSING
3/4"	100
NO.40	0-70
NO. 200	0-10

19. TRENCH BACKFILL SHALL BE WELL-GRADED SOIL AND GRAVEL MATERIAL. ALL PARTICLES SHALL HAVE A GRADATION OF 2" OR LESS. AN ACCEPTABLE MATERIAL SHALL MEET THE FOLLOWING REQUIREMENT:

SIEVE DESIGNATION	% PASSING
2 INCH	100
1/4 INCH	30-65
NO. 40	5-40
NO. 200	0-15

20. BEDDING AND BACKFILL MATERIAL SHALL BE STOCKPILED IN AMOUNTS NECESSARY FOR REASONABLE BACKFILLING REQUIREMENTS. A SIEVE ANALYSIS OF BEDDING OR BACKFILL MAY BE REQUIRED AT THE REQUEST OF THE CITY OF POUGHKEEPSIE.
21. THE SITE UTILITY CONTRACTOR SHALL BE RESPONSIBLE FOR ALL BURIED PIPING TO THE LOCATION OF THE PROPOSED BUILDING CONNECTION POINT (I.E. INSIDE THE BUILDING). THIS INCLUDES THE TESTING AND CERTIFICATION OF ALL WATER SERVICE WORK FROM THE CITY WATER CONNECTION POINT TO THE PROPOSED BUILDINGS INTERIOR CONNECTION POINT.
22. INDICATOR TAPE SHALL BE PLACED 12" BELOW FINISHED GRADE DIRECTLY ABOVE ALL WATERLINES.
23. ALL COPPER WATER SERVICE PIPING INSTALLATION, BACKFILL AND TESTING SHALL BE REVIEWED AND APPROVED BY THE CITY OF POUGHKEEPSIE WATER MAINTENANCE SUPERVISOR OR HIS DESIGNEE. BEDDING, PIPE ZONE, AND BACKFILL MATERIAL MUST BE SAND ONLY.
24. THE PIPE SUPPORTS FOR THE METER PIT SHALL BE MADE OF GALVANIZED STEEL AND SHALL BE ADJUSTABLE. THE SUPPORTS ARE TO BE PLACED ONLY BENEATH SPOOL PIECES AND NOT UNDER CRITICAL EQUIPMENT, METERS, ETC.
25. THREE AS-BUILT DRAWINGS WHICH INCLUDE VERIFICATION OF THE WATER INFRASTRUCTURE WILL BE PROVIDED TO THE PLANNING DEPARTMENT FOR DISSEMINATION TO THE ENGINEERING AND WATER DEPARTMENTS PRIOR TO ANY EASEMENT DEDICATION TO THE CITY.

CITY OF POUGHKEEPSIE SANITARY SEWER NOTES

1. FLOOR DRAINS, IF CONSTRUCTED, SHALL BE CONNECTED TO THE SANITARY SEWER. FLOOR DRAINS DO NOT INCLUDE FOUNDATION/FOOTER DRAIN. ALL DISCHARGES TO THE SANITARY SEWER SHALL COMPLY WITH THE EFFLUENT LIMITS OF THE LOCAL AND/OR DUTCHESS COUNTY SANITARY CODE.
2. DEFLECTION TESTS SHALL BE PERFORMED ON ALL FLEXIBLE PIPES. THE TESTS SHALL BE CONDUCTED AFTER FINAL BACKFILL HAS BEEN IN PLACE AT LEAST 5 DAYS. NO PIPE SHALL EXCEED A DEFLECTION OF 5%. IF THE DEFLECTION TEST IS TO BE RUN USING A RIGID BALL OR MANDREL, IT SHALL HAVE A DIAMETER EQUAL TO 95% OF THE INSIDE DIAMETER OF THE PIPE. THE TEST SHALL BE PERFORMED WITHOUT MECHANICAL PULLING DEVICES.
3. SANITARY SEWERS AND APPURTENANCES SHALL BE CONSTRUCTED IN ACCORDANCE WITH THE LATEST STANDARDS AND SPECIFICATIONS OF THE CITY OF POUGHKEEPSIE. ALL SANITARY SEWER SYSTEM COMPONENTS SHALL BE INSTALLED BY OR UNDER THE SUPERVISION OF A CITY OF POUGHKEEPSIE LICENSED PLUMBER IN ACCORDANCE WITH THE CITY PLUMBING CODE.
4. MAJOR EARTHWORK SHALL BE COMPLETED PRIOR TO INSTALLATION OF ANY SANITARY SEWER MAINS AND APPURTENANCES. AIR CONNECTING SEWER LINES SHALL BE FLUSHED BEFORE TESTED.
5. MAXIMUM ALLOWABLE INFILTRATION OR EXFILTRATION SHALL NOT EXCEED 100 GALLONS PER INCH DIAMETER PER MILE OF PIPE PER DAY FOR THE SANITARY SEWER. IF AN AIR TEST IS USED, THE TEST, AS A MINIMUM, SHALL CONFORM TO THE PROCEDURE DESCRIBED IN THE ASTM -F-1417 (1992) ENTITLED "STANDARD PRACTICE FOR INSTALLATION ACCEPTANCE OF GRAVITY SEWER LINES USING LOW PRESSURE AIR" (RE-APPROVED 1998). SANITARY MANHOLES SHALL BE VISUALLY INSPECTED AND TESTED FOR LEAKAGE BY EXFILTRATION OR VACUUM. VACUUM TESTING OF MANHOLES SHALL COMPLY WITH THE METHOD OUTLINED IN THE NEW YORK STATE DEPARTMENT OF ENVIRONMENTAL CONSERVATION TECHNICAL INFORMATION PAMPHLET (TIP) NO.15 (REVISED).
6. SANITARY SEWER MAINS ARE TO BE POLYVINYL CHLORIDE (PVC) AND SANITARY LATERALS SHALL BE PVC, SDR-35, UNLESS OTHERWISE NOTED.
7. FINAL SEWER COLLECTION SYSTEM LAYOUT IS SUBJECT TO REVIEW, REVISION AND APPROVAL BY THE CITY OF POUGHKEEPSIE SEWER DEPARTMENT.
8. ALL SANITARY PIPE AND/OR MANHOLES SHALL BE A MINIMUM OF TEN (10) HORIZONTAL FEET FROM THE WATER MAIN. SANITARY PIPE SHALL HAVE A MINIMUM 18" SEPARATION FROM ANY WATER MAIN OR WATER SERVICE LINE. IF FOR SOME REASON THIS SEPARATION CANNOT BE ACHIEVED, SANITARY SEWER PIPE IN THE AREA SHALL BE SDR-26 PRESSURE RATED PIPE, (OR BE ENCASED PER THE DETAIL ON DN-3) AND ONE FULL LENGTH OF WATER MAIN SHALL BE CENTERED UNDER OR OVER THE SEWER. ALL SANITARY SEWER CONSTRUCTION SHALL BE TO SPECIFICATIONS OF THE CITY OF POUGHKEEPSIE SEWER DEPARTMENT.
9. ALL SANITARY TESTING SHALL BE PERFORMED UNDER THE SUPERVISION OF THE PROJECT ENGINEER, AND CERTIFICATES OF COMPLIANCE WITH THE INSTALLATION SPECIFICATIONS, TEST STANDARDS, APPROVED PLANS OR APPROVED AMENDMENTS SHALL BE PROVIDED TO THE APPROPRIATE SEWER AUTHORITY AND THE DCDOH AS A CONDITION OF APPROVAL FOR OPERATION.
10. ALL SANITARY SEWER CONSTRUCTION SHALL BE SUBJECT TO INSPECTION BY THE CITY SEWER SUPERINTENDENT PRIOR TO BACKFILLING. PIPE BEDDING AND PIPE ZONE MATERIAL SHALL BE COMPOSED OF CRUSHED STONE OR GRAVEL, FREE OF SOFT NONDURABLE PARTICLES WITH THE FOLLOWING GRADATION REQUIREMENTS:

SIEVE DESIGNATION	% PASSING
3/4"	100
NO.40	0-70
NO. 200	0-10

ALL TRENCH BACKFILL MATERIAL SHALL BE APPROVED BY THE SUPERINTENDENT OF SEWERS AND MUST MEET THE FOLLOWING GRADATION REQUIREMENT:

SIEVE DESIGNATION	% PASSING
2 INCH	100
1/4 INCH	30-65
NO.40	5-40
NO. 200	0-15

BEDDING AND BACKFILL MATERIAL SHALL BE STOCKPILED IN AMOUNTS NECESSARY FOR REASONABLE BACKFILLING REQUIREMENTS. A SIEVE ANALYSIS OF BEDDING OR BACKFILL MAY BE REQUIRED AT THE REQUEST OF THE CITY OF POUGHKEEPSIE.

11. ALL NEW SANITARY SEWER MANHOLE COVERS SHALL BE NOMINAL 26" DIAMETER CAST IRON AND SHALL READ "SANITARY SEWER". FRAMES SHALL BE 8" IN HEIGHT AND THE FRAME AND COVER SHALL BE SYRACUSE CASTINGS NO.1 009 OR AN APPROVED EQUAL.
12. INDICATOR TAPE SHALL BE PLACED 12" BELOW FINISHED GRADE DIRECTLY ABOVE ALL SANITARY LINES.
13. LOCATION OF SEWER LATERAL CLEAN OUTS ARE TO BE PLACED AS SHOWN ON THE APPROVED SITE PLAN AND NOT TO EXCEED EVERY 75' MEASURED FROM THE SEWER MAIN CONNECTION OR AS DETERMINED BY THE CITY OF POUGHKEEPSIE SUPERINTENDENT OF SEWERS WHERE LOCATIONS ARE NOT SPECIFICALLY SHOWN.
14. EXTERNAL DROP MANHOLES SHALL BE USED FOR SEWERS ENTERING AT AN ELEVATION OF 24 INCHES OR HIGHER AT THE INLET OF A SEWER MANHOLE.
15. THREE AS-BUILT DRAWINGS WHICH INCLUDE VERIFICATION OF THE SEWER INFRASTRUCTURE INCLUDING RIMS AND INVERTS WILL BE PROVIDED TO THE PLANNING DEPARTMENT FOR DISSEMINATION TO THE ENGINEERING AND SEWER DEPARTMENTS PRIOR TO ANY EASEMENT DEDICATION TO THE CITY.

CONTRACTOR NOTES

1. BACKFLOW PREVENTION IS REQUIRED FOR BOTH THE FIRE AND DOMESTIC WATER SERVICE CONNECTIONS.
2. TAPPING SLEEVE VALVE IS TO BE RIGHT OPEN PER CITY OF POUGHKEEPSIE DPW REQUIREMENTS.

LEGEND

- S — PROPOSED SANITARY SERVICE
- W — PROPOSED WATER SERVICE
- DCO — PROPOSED DOUBLE SANITARY CLEANOUT
- GV — PROPOSED WATER SHUT OFF VALVE
- PROPOSED SANITARY MANHOLE
- FDC — PROPOSED FIRE DEPARTMENT CONNECTION (FDC)

STATE OF NEW YORK — RODNEY E. MORRISON — 074194 — LICENSED PROFESSIONAL ENGINEER

Revisions		
1.	2025-09-09	SITE PLAN FOR ZBA SUBMISSION
2.	2025-09-30	CITY PLANNING BOARD SUBMISSION
3.	2025-12-03	CITY PLANNING BOARD SUBMISSION

LRC Engineering & Surveying
- Civil Engineering
- Land Surveying
- Landscape Architecture
- Land Planning
- Laser Scanning & BIM
- Subsurface Utility Engineering

Land Resource Consultants Engineering & Surveying, LLC
D.B.A. Loureiro NY, P.C.
85 Civic Center Plaza, Suite 204
Poughkeepsie NY 12601
Tel: 845.243.2880
160 West Street, Suite E
Cromwell, CT 06416
Tel: 860.635.2877
www.lrcconsult.com

SITE UTILITIES

WATER STREET DEVELOPMENT

141 NORTH WATER STREET
CITY OF POUGHKEEPSIE, DUTCHESS COUNTY, NEW YORK

Design/Calcs	BLS	CAD File	UT22298501.dwg	Sheet No.
Drawn	SMC	Project No.	22-2985	UT-1
Checked	KFC	Date	2025-07-22	SHEET 6 OF 18
Approved	LRC	Scale	1"=20'	

X:\JOBS\Jobs 2022\22-2985-141 North Water Street Pok-Sunrise Developers Corp\DWG\UT22298501.dwg 12/1/2025 10:53 AM SCurran

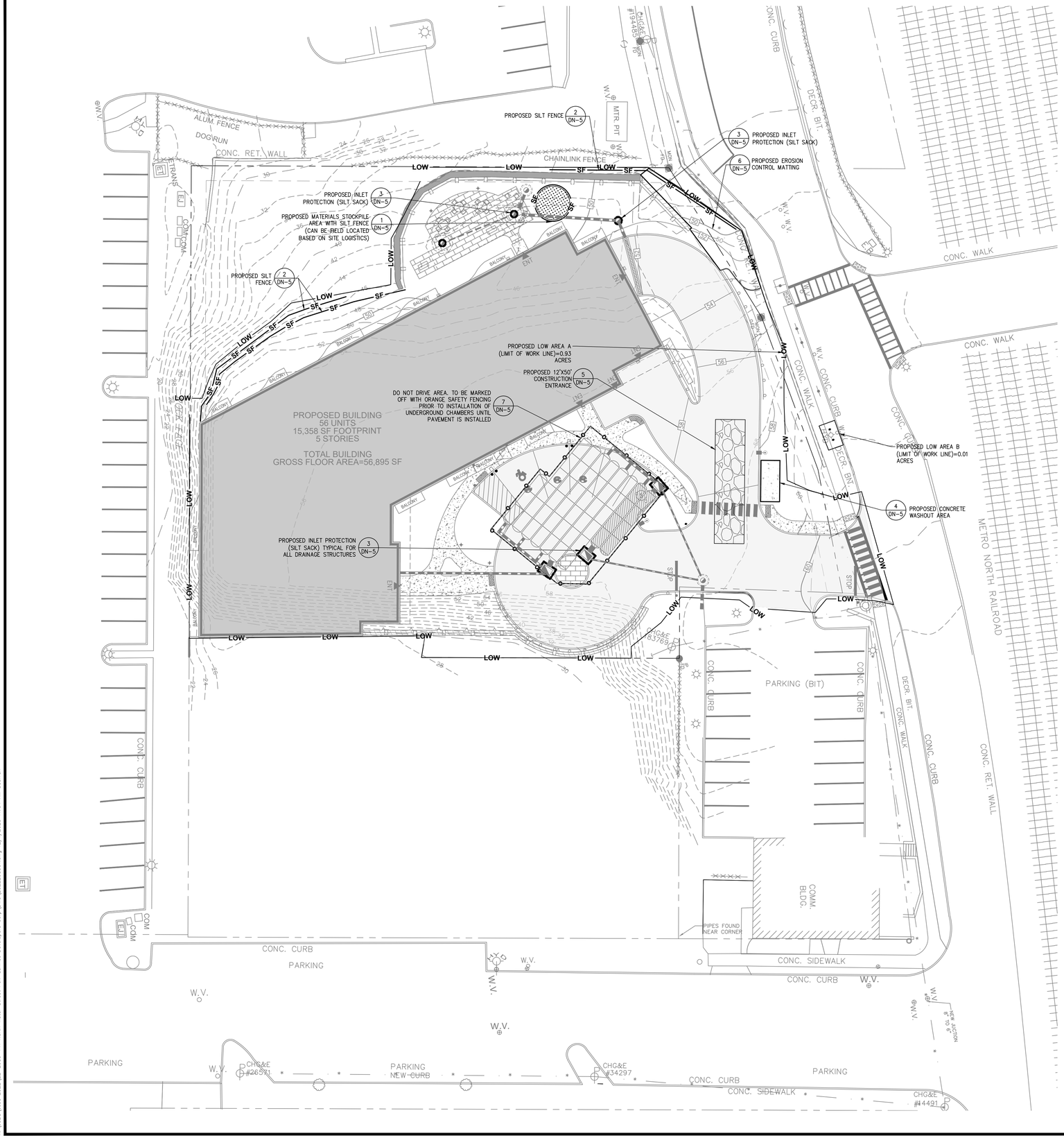

EROSION AND SEDIMENT CONTROL PLAN

1. ALL EROSION AND SEDIMENTATION CONTROL MEASURES SHALL BE CONSTRUCTED IN ACCORDANCE WITH THE STANDARDS AND SPECIFICATION OF THE NEW YORK STATE EROSION & SEDIMENT CONTROL "BLUE BOOK" LATEST EDITION.
2. EROSION AND SEDIMENT CONTROL MEASURES SHALL BE INSTALLED PRIOR TO CONSTRUCTION WHENEVER POSSIBLE.
3. ALL CONTROL MEASURES SHALL BE MAINTAINED IN EFFECTIVE CONDITION THROUGHOUT THE CONSTRUCTION PERIOD.
4. ADDITIONAL CONTROL MEASURES SHALL BE INSTALLED DURING THE CONSTRUCTION PERIOD IF NECESSARY OR REQUIRED.
5. SEDIMENT REMOVED FROM CONTROL STRUCTURES WILL BE DISPOSED OF IN A MANNER WHICH IS CONSISTENT WITH THE INTENT OF THIS PLAN.
6. DUST CONTROL AND ANTI-TRACKING MAINTENANCE TO BE ADDRESSED AND RESOLVED ON A DAILY BASIS.

OPERATION AND MAINTENANCE OF SEDIMENTATION AND EROSION CONTROL MEASURES

1. SILTATION FENCE
   ALL SILTATION FENCES SHALL BE INSPECTED ONCE EVERY SEVEN DAYS. ALL DETERIORATED FABRIC AND DAMAGED POSTS SHALL BE REPLACED AND PROPERLY REPOSITIONED IN ACCORDANCE WITH THIS PLAN

   SEDIMENT DEPOSITS SHALL BE REMOVED FROM BEHIND THE FENCE WHEN THEY EXCEED A HEIGHT OF ONE FOOT.
2. INLET PROTECTION
   ALL INLET PROTECTION DEVICES SHALL BE INSPECTED DAILY BY THE QUALIFIED INSPECTOR TO ENSURE THAT SEDIMENT IS NOT ENTERING ANY STORM DRAIN INLETS. PROTECTION DEVICES ARE TO BE REPAIRED AND/OR REPLACED IF NOT FUNCTIONING AS DESIGNED.
3. STABILIZED CONSTRUCTION ENTRANCE
   THE ACCESS SHALL BE MAINTAINED IN A CONDITION WHICH WILL PREVENT TRACKING OF SEDIMENT ONTO PUBLIC RIGHTS-OF-WAY OR STREETS. THIS MAY REQUIRE PERIODIC TOP DRESSING WITH ADDITIONAL AGGREGATE. ALL SEDIMENT SPILLED, DROPPED, OR WASHED ONTO PUBLIC RIGHTS-OF-WAY MUST BE REMOVED IMMEDIATELY.

   WHEN NECESSARY, WHEELS MUST BE CLEANED TO REMOVE SEDIMENT PRIOR TO ENTRANCE ONTO PUBLIC RIGHTS-OF-WAY. WHEN WASHING IS REQUIRED, IT SHALL BE DONE ON AN AREA STABILIZED WITH AGGREGATE, WHICH DRAINS INTO AN APPROVED SEDIMENT TRAPPING ALL SEDIMENT SHALL BE PREVENTED FROM ENTERING STORM DRAINS, DITCHES, OR WATERCOURSES.
4. CONCRETE WASHOUT
   ALL CONCRETE WASHOUT FACILITIES SHALL BE INSPECTED DAILY. DAMAGED OR LEAKING FACILITIES SHALL BE DEACTIVATED AND REPAIRED OR REPLACED IMMEDIATELY. EXCESS RAINWATER THAT HAS ACCUMULATED OVER HARDENED CONCRETE SHOULD BE PUMPED TO A STABILIZED AREA, SUCH AS A GRASS FILTER STRIP.

   ACCUMULATED HARDENED MATERIAL SHALL BE REMOVED WHEN 75% OF THE STORAGE CAPACITY OF THE STRUCTURE IS FILLED. ANY EXCESS WASH WATER SHALL BE PUMPED INTO A CONTAINMENT VESSEL AND PROPERLY DISPOSED OF OFF SITE.

   DISPOSE OF THE HARDENED MATERIAL OFF-SITE IN A CONSTRUCTION/DEMOLITION LANDFILL. ON-SITE DISPOSAL MAY BE ALLOWED IF THIS HAS BEEN APPROVED AND ACCEPTED AS PART OF THE PROJECTS SWPPP. IN THAT CASE, THE MATERIAL SHOULD BE RECYCLED AS SPECIFIED, OR BURIED AND COVERED WITH A MINIMUM OF 2 FEET OF CLEAN COMPACTED EARTHFILL THAT IS PERMANENTLY STABILIZED TO PREVENT EROSION.

   THE PLASTIC LINER SHALL BE REPLACED WITH EACH CLEANING OF THE WASHOUT FACILITY.

   INSPECT THE PROJECT SITE FREQUENTLY TO ENSURE THAT NO CONCRETE DISCHARGES ARE TAKING PLACE IN NON-DESIGNATED AREAS.

LOW AREAS

LOW AREA A=0.93 ACRES
LOW AREA B=0.01 ACRES

LOW TOTAL=0.94 ACRES

CITY OF POUGHKEEPSIE EROSION AND SILTATION CONTROL NOTES

1. All unvegetated areas in excess of 10% per direction of the Engineer, shall have temporary seeding of fast germinating rye, 10 to 15 #'s per 1,000 sq. ft.
2. Graded areas – upper elevations: Provide temporary drainage swales, 1% grade min., to direct runoff away from construction sites. Discharge areas to be acceptable to the Engineer.
3. Graded areas – lower elevations: Provide drainage swales, 1% min. grades, with staked and secured hay bale siltation. Location of hay bales and discharge areas per approval of Engineer.
4. Permanent seeded areas for erosion control: Mixture of perennial rye and blue and red fescue grasses (50/50), 15 to 25 #'s per 1,000 sq. ft., mulching at 5#'s per 1,000 sq. ft., fertilizer – 5.10.5 at 5#'s per 1,000 sq. ft. (if determined necessary by Engineer), with pegging and netting for grades in excess of 15%.
5. All permanent drainage interceptor swales to be seeded per Item 4 also.
6. All erosion control shall be in accordance with the latest "Urban Erosion and Sediment Control Guidebook" of the Dutchess County Soil and Water Conservation District.
7. All areas shall be seeded and mulched as soon as possible.
8. Grade as needed and feasible to permit the use of conventional equipment for seed bed preparation, seeding and mulch application.
9. Scarify all compacted soils prior to applying topsoil.
10. Apply topsoil per Standard #6 Table 6.1 of the Soil Erosion Control Guide Book.
11. Seed mix shall be as follows:
    Ky. Blue grass 20 lbs/ac.
    Creeping Red Fescue 40 lbs/ac.

LEGEND

- PROPERTY LINE
- SF — PROPOSED SILT FENCE
- PROPOSED INLET PROTECTION (SILT SACKS)
- LOW — PROPOSED LIMIT OF WORK (LOW)
- PROPOSED CONCRETE WASHOUT AREA
- PROPOSED CONSTRUCTION ENTRANCE
- PROPOSED EROSION CONTROL MATTING
- SF — PROPOSED SOIL MATERIALS STOCKPILE AREA WITH SILT FENCE
- PROPOSED ORANGE SAFETY FENCE

GRAPHIC SCALE
20 10 0 20
SCALE IN FEET

STATE OF NEW YORK — RODNEY E MORRISON — 074194 — LICENSED PROFESSIONAL ENGINEER

No.	Revisions
1.	2025-09-09 SITE PLAN FOR ZBA SUBMISSION
2.	2025-09-30 CITY PLANNING BOARD SUBMISSION
3.	2025-12-03 CITY PLANNING BOARD SUBMISSION

LRC Engineering & Surveying
- Civil Engineering
- Land Surveying
- Landscape Architecture
- Land Planning
- Laser Scanning & BIM
- Subsurface Utility Engineering

Land Resource Consultants Engineering & Surveying, LLC
D.B.A. Lourenso NY, P.C.
85 Civic Center Plaza, Suite 204
Poughkeepsie NY 12601
Tel: 845.243.2880
160 West Street, Suite E
Cromwell, CT 06416
Tel: 860.635.2877
www.lrcconsult.com

EROSION & SEDIMENTATION CONTROL PLAN

WATER STREET DEVELOPMENT

141 NORTH WATER STREET
CITY OF POUGHKEEPSIE, DUTCHESS COUNTY, NEW YORK

Design/Calcs	BLS	CAD File	EC22298501.dwg
Drawn	SMC	Project No.	22-2985
Checked	KFC	Date	2025-07-22
Approved	LRC	Scale	1"=20'

Sheet No. EC-1
SHEET 7 OF 18

X:\JOBS\Jobs 2022\22-2985-141 North Water Street Pde-Sunrise Developers Corp\DWG\EC22298501.dwg 12/1/2025 11:04 AM SCorren

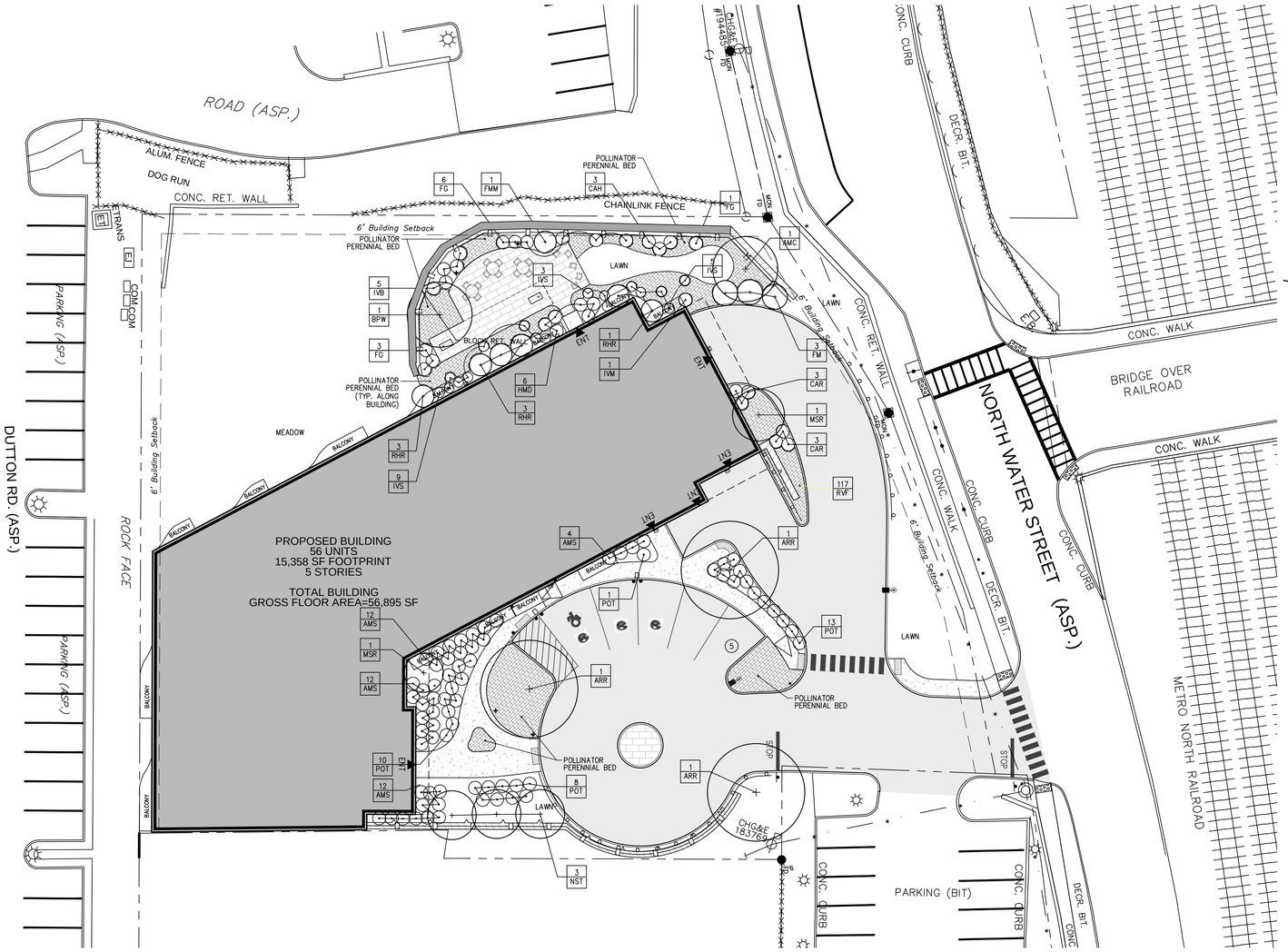

NOTE:

PRUNE TREES IN ACCORDANCE WITH APPROVED HORTICULTURAL STANDARDS (ANLA) IN ORDER TO PRESERVE THE NATURAL FORM OF THE SPECIFIC PLANTS.

IF APPLICABLE & APPROVED BY THE LANDSCAPE ARCHITECT, ONE-FOURTH TO ONE-THIRD OF THE WOOD SHALL BE REMOVED BY THINNING OUT TO BALANCE ROOT LOSS DUE TO TRANSPLANTING.

WIRE BASKET NOTE:
IN ADDITION TO REMOVING TOP ⅓ OF WIRE BASKET, SNIP HORIZONTAL AND VERTICAL WEAVES OF LOWER ⅔ OF REMAINING BASKET, TO BASE OF ROOT BALL, PRIOR TO BACKFILL.

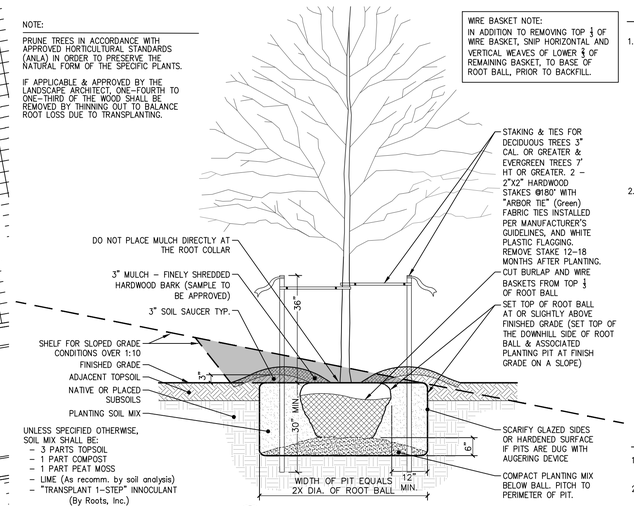

1 TREE PLANTING DETAIL
SCALE: 1/2" = 1'-0"

SEED MIXES:

1. LAWN SEEDING MIXTURE (LOW-MOW) - ALL DISTURBED AREAS NOT SHOWN AS PAVED, BUILDING FOOTPRINT OR OTHERWISE DEVELOPED SHALL BE SEEDED WITH THE LOW MOW SEETING SHOWN BELOW::

   15% KENTUCKY BLUEGRASS (POA PRATENSIS - SINGLE VARIETY)
   15% PERENNIAL RYEGRASS (LOLIUM PERENNE)
   30% CREEPING RED FESCUE (FESTUCA RUBRA)
   25% CHEWINGS FESCUE (FESCTUCA RUBRA "JAMESTOWN II")
   15% HARD FESCUE (FESTUCA OVINA "RELIANT II")

   SEEDING RATE: 4.5 LBS PER 1,000 S.F. (ADD 10% TO QUANTITY IF HYDROSEEDED).

   SEEDING DATES: AUGUST 15 - OCTOBER 1 AND APRIL 15 - JUNE 15 UNLESS OTHERWISE APPROVED BY THE OWNER OR LANDSCAPE ARCHITECT.

2. MEADOW SEEDING MIXTURE-LOW-GROWING WILDFLOWER & GRASS MIX - ERNMX-156

41.00 % FESTUCA OVINA	SHEEP FESCUE
27.80 % LOLIUM MULTIFLORUM	ANNUAL RYEGRASS
10.00 % BOUTELOUA CURTIPENDULA BUTTE	SIDEOATS GRAMA, BUTTE 30.86
6.30 % LINUM PERENNE	PERENNIAL BLUE FLAX
5.00 % CENTAUREA CYANUS	BACHELOR'S BUTTON - BLUE
1.50 % COREOPSIS LANCEOLATA	LANCELEAF COREOPSIS
1.50 % GAILLARDIA ARISTATA	PERENNIAL GAILLARDIA (BLANKETFLOWER)
1.50 % RUDBECKIA HIRTA	BLACKEYED SUSAN
1.10 % GAILLARDIA PULCHELLA	ANNUAL GAILLARDIA (INDIAN BLANKET)
1.00 % CHRYSANTHEMUM MAXIMUM	SHASTA DAISY
1.00 % ZIZIA AUREA, PA ECOTYPE	GOLDEN ALEXANDERS, PA ECOTYPE
0.50 % ASTER OBLONGIFOLIUS, PA ECOTYPE	AROMATIC ASTER, PA ECOTYPE
0.40 % PYCNANTHEMUM TENUIFOLIUM	NARROWLEAF MOUNTAINMINT
0.30 % ASCLEPIAS TUBEROSA, PA ECOTYPE	BUTTERFLY MILKWEED, PA ECOTYPE
0.30 % PAPAVER RHOEAS, RED	CORN POPPY, RED
0.30 % PAPAVER RHOEAS, SHIRLEY MIX	CORN POPPY/SHIRLEY MIX
0.20 % AGASTACHE FOENICULUM	ANISE (LAVENDER) HYSSOP
0.20 % PENSTEMON HIRSUTUS	HAIRY BEARDTONGUE
0.10 % ACHILLEA MILLEFOLIUM	COMMON YARROW

24-40 LBS PER ACRE

PLANTING NOTES:

1. THE LANDSCAPE PLAN AND RELATED DETAILS ARE FOR LANDSCAPING INFORMATION ONLY. PLEASE REFER TO THE SITE, GRADING & EROSION CONTROL PLANS FOR ALL OTHER INFORMATION.
2. THE CONTRACTOR SHALL GUARANTEE THAT ALL PLANTS, TREES, AND SHRUBS SHALL BE HEALTHY AND FREE OF DISEASE FOR A PERIOD OF ONE YEAR AFTER SUBSTANTIAL COMPLETION AND ACCEPTANCE BY OWNER OR LANDSCAPE ARCHITECT. CONTRACTOR SHALL REPLACE ANY DEAD OR UNHEALTHY PLANTS AT CONTRACTOR'S EXPENSE. PLANT MATERIAL REPLACEMENTS SHALL BE GUARANTEED FOR ONE FULL YEAR FROM DATE OF REPLACEMENT. FINAL ACCEPTANCE SHALL BE MADE IF ALL PLANTS MEET THE GUARANTEE REQUIREMENTS INCLUDING MAINTENANCE. MAINTENANCE RESPONSIBILITIES INCLUDE CULTIVATING, SPRAYING, WEEDING, WATERING, TIGHTENING GUYS, PRUNING, FERTILIZING, MULCHING, AND ANY OTHER OPERATIONS NECESSARY TO MAINTAIN PLANT VIABILITY. MAINTENANCE SHALL BEGIN IMMEDIATELY AFTER PLANTING AND CONTINUE UNTIL THE END OF THE ONE YEAR GUARANTEE PERIOD.
3. THE CONTRACTOR SHALL SUPPLY ALL LABOR, PLANTS, AND MATERIALS IN QUANTITIES SUFFICIENT TO COMPLETE THE WORK SHOWN ON THE DRAWINGS AND LISTED IN THE PLANT SCHEDULE. IN THE EVENT OF A DISCREPANCY BETWEEN QUANTITIES SHOWN IN THE PLANT SCHEDULE AND THOSE REQUIRED BY THE DRAWINGS, THE LARGER SHALL APPLY.
4. NO PLANT SHALL BE PLACED IN THE GROUND BEFORE ROUGH GRADING HAS BEEN COMPLETED AND APPROVED BY ENGINEER. STAKING THE LOCATION OF ALL TREES AND SHRUBS SHALL BE COMPLETED PRIOR TO PLANTING FOR APPROVAL BY THE OWNER OR LANDSCAPE ARCHITECT. STAKING OF THE INSTALLED TREE MUST BE COMPLETED THE SAME DAY AS IT IS INSTALLED. ALL TREES SHALL BE STAKED OR GUYED PER DETAIL. SEE THIS SHEET FOR PLANTING DETAILS.
5. COORDINATE PLANT MATERIAL LOCATIONS WITH SITE UTILITIES. SEE SITE LAYOUT, GRADING AND UTILITY DRAWINGS FOR STORM, SANITARY AND WATER LINES. SEE LIGHTING PLAN FOR ELECTRICAL AND LIGHTING LAYOUT AND DETAILS. UTILITY LOCATIONS ARE APPROXIMATE. EXERCISE CARE WHEN DIGGING IN AREAS OF POTENTIAL CONFLICT WITH UNDERGROUND OR OVERHEAD UTILITIES. THE CONTRACTOR IS RESPONSIBLE FOR ANY DAMAGE DUE TO CONTRACTOR'S NEGLIGENCE AND SHALL REPLACE OR REPAIR ANY DAMAGE AT CONTRACTOR'S EXPENSE.
6. TREE PLANTING PITS MUST BE FREE DRAINING. PAVEMENT, COMPACTED SUBGRADE, AND BLASTED ROCK SHALL BE REMOVED FROM WITHIN TRAFFIC ISLANDS TO BE LANDSCAPED TO A DEPTH OF 2' OR TO A GREATER DEPTH IF REQUIRED BY PLANTING DETAILS OR SPECIFICATIONS. REPLACE SOIL WITHIN ISLANDS WITH MODERATELY COMPACTED LOAM OR SANDY LOAM FREE FROM STONES AND RUBBISH 1" OR GREATER IN DIAMETER AND ANY OTHER MATERIAL HARMFUL TO PLANT GROWTH AND DEVELOPMENT. PLANTING INSTALLATION WITHIN ISLANDS SHALL BE AS DETAILED AND CONTAIN PLANTING MIX AS SPECIFIED.
7. TIME OF PLANTING: NEW PLANT MATERIALS SHALL BE INSTALLED BETWEEN APRIL 1 AND JUNE 1, OR AFTER SEPTEMBER 15TH AND NO LATER THAN OCTOBER 31ST.
8. PLANTING SOIL MIXTURE FOR TREES AND SHRUBS:
   - 1 PART PEAT MOSS
   - 3 PARTS TOPSOIL
   - FERTILIZER/LIME (APPLY AS RECOMMENDED BY SOIL ANALYSIS)
   - MYCORHIZA INOCULANT - "TRANSPLANT 1-STEP" AS MANUFACTURED BY ROOTS, INC. OR APPROVED EQUAL.
     USE PER MANUFACTURER'S RECOMMENDATIONS FOR TREES AND SHRUBS.

PERENNIALS

DECIDUOUS TREES:

CODE	QTY.	BOTANICAL NAME	COMMON NAME	ROOT	SIZE INSTALLED	SIZE MATURE	COMMENTS/BLOOM TIME
ARR	3	ACER RUBRUM 'RED SUNSET'	RED SUNSET RED MAPLE	B&B	2.5-3" cal.	40' ht.	Upright oval crown
AMC	1	AMELANCHIER CANADENSIS	SHADBLOW	B&B	8-10' ht.	25' ht.	Clump Form
BPW	1	BETULA POPULIFOLIA 'WHITESPIRE'	WHITESPIRE GRAY BIRCH	B&B	12-14' ht.	20-40'	Clump Form
MSR	1	MAGNOLIA STELLATA 'ROYAL STAR'	ROYAL STAR MAGNOLIA	B&B	6-8' ht.	12-20' ht	Clump/Early Spring (March)
NST	3	NYSSA SYLVATICA 'TUPELO TOWER'	TUPELO TOWER BLACK GUM	B&B	2-2 ½" cal.	20-40' ht	16' wide

SHRUBS:

CODE	QTY.	BOTANICAL NAME	COMMON NAME	ROOT	SIZE INSTALLED	SIZE MATURE	COMMENTS/BLOOM TIME
AAB	11	ARONIA ARBUTIFOLIA 'BRILLIANTISSIMA'B	BRILLIANTISSIMA RED CHOKEBERRY	CONT.	#3	6-10' ht.	
AMS	40	ARONIA MELANOCARPA 'SMNAMPEM'	LOW SCAPE SNOWFIRE CHOKEBERRY	CONT.	#1	3-4' ht.	
CAH	3	CLETHRA ALNIFOLIA 'HUMMINGBIRD'	HUMMINGBIRD SUMMERSWEET	CONT.	#7	3-4' ht.	
CAR	6	CLETHRA ALNIFOLIA 'RUBY SPICE'	RUBY SPICE SUMMERSWEET	CONT.	#7	4-6' ht.	
FG	10	FOTHERGILLA GARDENII	DWARF FOTHERGILLA	CONT.	#5	3-4' ht.	
FG	1	FOTHERGILLA GARDENII	LARGE FOTHERGILLA	CONT.	#5	6-10' ht.	
FMM	1	FOTHERGILLA MAJOR 'MOUNT AIRY'	MOUNT AIRY FOTHERGILLA	CONT.	#5	5-6' ht.	
HMD	6	HYDRANGEA MACROPHYLLA 'D.D.'	DOUBLE DOWN BIGLEAF HYDRANGEA	CONT.	#5	3-4' ht.	
IVB	5	ILEX VERTICILLATA 'BERRY POPPINS'	BERRY POPPINS WINTERBERRY	CONT.	#5.	3-4' ht.	
IVM	1	ILEX VERTICILLATA 'MR. POPPINS'	MR. POPPINS WINTERBERRY	CONT.	#5.	3-4' ht.	Male Pollinator
IVS	17	ITEA VIRGINICA 'SCENTLANDIA'	SCENTLANDIA SWEETSPIRE	CONT.	#5.	2-3' ht.	
POT	32	PHYSOCARPUS OPULIFOLIUS 'TINY WINE'	TINY WINE NINEBARK	CONT.	#3	3-4' ht./w	
RHR	3	RHODODENDRON 'HOLDEN'S RED'	HOLDEN'S RED RHODODENDRON	CONT.	#5	4-5' ht	6-8'w

PERENNIALS:

CODE	QTY.	BOTANICAL NAME	COMMON NAME	ROOT	SIZE INSTALLED	SIZE MATURE	COMMENTS/BLOOM TIME
RFV	117	RUDBECKIA FULGIDA 'VIETTES LITTLE SUZY'	VIETTES LITTLE SUZIE RUDBECKIA	CONT.	#SP5	12-14" ht.	18" O.C.

WIRE BASKET NOTE:
IN ADDITION TO REMOVING TOP ⅓ OF WIRE BASKET, SNIP HORIZONTAL AND VERTICAL WEAVES OF LOWER ⅔ OF REMAINING BASKET, TO BASE OF ROOT BALL, PRIOR TO BACKFILL.

UNLESS SPECIFIED OTHERWISE, SOIL MIX SHALL BE:
- 3 PARTS TOPSOIL
- 1 PART PEAT MOSS OR COMPOST
- LIME (As recommended by soil analysis)
- "TRANSPLANT 1-STEP" INNOCULANT (By Roots, Inc.)

NOTE: IN AREAS OF MASS PLANTING, EXCAVATE BED AREA CONTINUOUSLY, BACKFILL BETWEEN SHRUBS WITH PLANTING SOIL MIX, AND APPLY MULCH TO THE SURFACE TO THE ENTIRE BED.

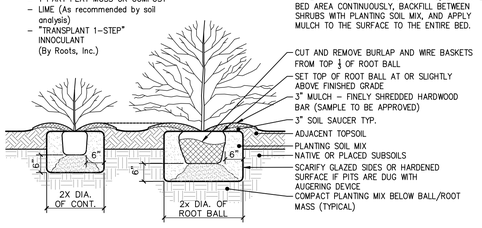

3 SHRUB PLANTING DETAIL
SCALE: 1/2" = 1'-0"

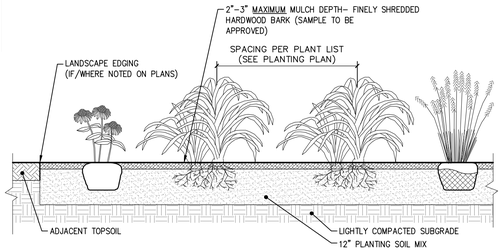

SECTION THROUGH PERENNIAL BED

PERENNIAL NOTES:
1. BULB/CORM PERENNIALS TO BE PLANTED IN FALL. POTTED PERENNIALS MAY BE PLANTED APRIL 15 TO OCTOBER 1.
2. ROTOTILL FERTILIZER AND LIME INTO SOIL PRIOR TO PLANTING AND IN ACCORDANCE TO SOIL ANALYSIS RECOMMENDATIONS.
3. DO NOT OVER COMPACT PLANTING BED. WATER THOROUGHLY AFTER PLANTING BULBS.
4. ADJUST PLANTING DEPTH AS RECOMMENDED BY BULB SUPPLIER.
5. PROVIDE DRAINAGE AS REQUIRED (PERF PIPE 4" ADS) WHEN SUBGRADE IS CLASSIFIED AS A HEAVY SOIL OR EXCESSIVELY COMPACTED.

UNLESS SPECIFIED OTHERWISE, PERENNIAL BED SOIL MIX SHALL BE:
- 3 PARTS TOPSOIL
- 1 PART MANURE (WEED FREE)
- 1 PART PEAT MOSS OR COMPOST
- LIME (As recommended by soil analysis)
- "MILORGANITE" AT 5 LBS. PER 100 SF.

4 ANNUAL/PERENNIAL AND GROUND COVER BEDS DETAIL
SCALE: 1/2" = 1'-0"

GRAPHIC SCALE
20 10 0 20
SCALE IN FEET

No.	Date	Revisions
1.	2025-09-09	SITE PLAN FOR ZBA SUBMISSION
2	2025-09-30	CITY PLANNING BOARD SUBMISSION
3	2025-12-03	CITY PLANNING BOARD SUBMISSION

LRC Engineering & Surveying
- Civil Engineering
- Land Surveying
- Landscape Architecture
- Land Planning
- Laser Scanning & BIM
- Subsurface Utility Engineering

Land Resource Consultants Engineering & Surveying, LLC
D.B.A. Loomis NY, P.C.
85 Civic Center Plaza, Suite 204
Poughkeepsie NY 12601
Tel: 845.243.2880
160 West Street, Suite E
Cromwell, CT 06416
Tel: 860.635.2877
www.lrcconsult.com

PLANTING PLAN & DETAILS

WATER STREET DEVELOPMENT

141 NORTH WATER STREET
CITY OF POUGHKEEPISE, DUTCHESS COUNTY, NEW YORK

Design/Calcs	BLS	CAD File	
Drawn	SMC	Project No.	22-2985
Checked	KFC	Date	2025-07-22
Approved	LRC	Scale	1"=20'

Sheet No. LL-1
SHEET 8 OF 18

X:\JOBS\Jobs 2022\22-2985-141 North Water Street Pok-Sunrise Developers Corp\DWG\LL22298501.dwg 12/1/2025 11:04 AM SOurran



SITE LIGHTING FIXTURE SCHEDULE:

Luminaire Schedule

Symbol	Qty	Tag	Label	Arrangement	Mounting Height	Description	BUG Rating	LLF	Luminaire Lumens	Luminaire Watts	Total Watts
	1	AT1	PT-3-BC	Single	12	VP-ST-1-36L-39-3K7-3-BC	B0-U0-G1	1.000	4199	45.5	45.5
	1	AT2	PT-5QW	Single	12	VP-ST-1-36L-39-3K7-5QW	B3-U0-G2	1.000	4827	39.1	39.1
	2	B1	B-3	Single	0	PA7R-NU3-12L-010-3K7	B0-U0-G0	1.000	809	14.08	28.16
	2	B2	B-3-BC	Single	0	PA7R-NU3HS-12L-010-3K7	B0-U0-G0	1.000	684	14	28
	1	B3	B-5	Single	0	PA7R-NU5-12L-010-3K7	B1-U0-G0	1.000	908	14	14
●	2	EX	EX-DCLD-3	Single	14	DCLD P20 G1 30K xxxxx MS 3LS	B1-U4-G2	1.000	2537	22	44
	7	WP	WP	Single	11	HLWPC2 P10 30K XX T3M	B1-U0-G1	1.000	2800	28	196

POST TOP LIGHT FIXTURE:

BEACON design . performance . technology

VIPER Area/Site
VIPER LUMINAIRE

DATE: | LOCATION:
TYPE: | PROJECT:
CATALOG #:



MICROSTRIKE | STRIKE OPTICS
SIZE 1

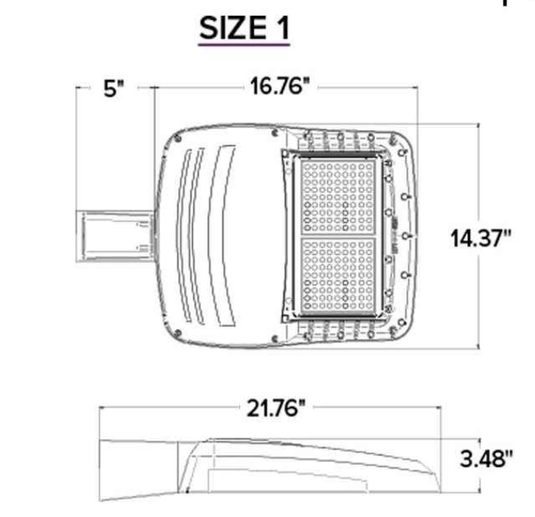

D E

STRIKE OPTIC – ORDERING GUIDE

Example: VP–ST–1–36L-39–3K7–2–UNV–A–BLT

CATALOG # VP-ST-1-36L-39-3K8-3/4F/5QM-X-UNV-BC

VP – Series: VP Viper Area – Optic Platform: ST Strike Optics – Size: 1 Size 1; 2 Size 2; 3 Size 3; 4 Size 4

Light Engine: 36L-39 39W - 5,500 Lumens; 36L-55 55W - 7,500 Lumens; 36L-85 85W - 10,000 Lumens; 36L-105 105W - 12,500 Lumens; 36L-120 120W - 15,000 Lumens; 72L-115 115W - 15,000 Lumens; 72L-145 145W - 18,000 Lumens; 72L-180 180W - 21,000 Lumens; 72L-210 210W - 24,000 Lumens; 72L-240 240W - 27,000 Lumens; 108L-215 215W - 27,000 Lumens; 108L-250 250W - 30,000 Lumens; 108L-280 280W - 33,000 Lumens; 108L-325 325W - 36,000 Lumens; 108L-365 365W - 40,000 Lumens; 162L-320 320W - 40,000 Lumens; 162L-365 365W - 44,000 Lumens; 162L-405 405W - 48,000 Lumens; 162L-445 445W - 52,000 Lumens; 162L-485 485W - 55,000 Lumens; 162L-545 545W - 60,000 Lumens; CLO Custom Lumen Output

CCT/CRI: 27K8 2700K, 80 CRI; 3K7 3000K, 70 CRI; 3K8 3000K, 80 CRI; 3K9 3000K, 90 CRI; 35K8 3500K, 80 CRI; 4K7 4000K, 70 CRI; 4K8 4000K, 80 CRI; 4K9 4000K, 90 CRI; 5K7 5000K, 70 CRI; 5K8 5000K, 80 CRI

Distribution: FR Auto Front Row; 2 Type 2; 3 Type 3; 4F Type 4 Forward; 4W Type 4 Wide; 5QN Type 5 Square Narrow; 5QW Type 5 Square Wide; 5QM Type 5 Square Medium; 5W Type 5 Wide (Round); 5RW Type 5 Rectangular; C Corner Optic; TC Tennis Court Optic

Optic Rotation: BLANK No Rotation; L Optic rotation left; R Optic rotation right

Voltage: UNV 120-277V; 120 120V; 208 208V; 240 240V; 277 277V; 347 347V; 480 480V

Mounting: A Arm mount for square pole (B3 Drill Pattern) (Does not include round pole adapter); A_ Arm mount for round pole; ASQU Universal arm mount for square pole; A_U Universal arm mount for round pole; AAU Adjustable arm for pole mounting (universal drill pattern); AA_U Adjustable arm mount for round pole; ADU Decorative upswept Arm (universal drill pattern); AD_U Decorative upswept arm mount for round pole; MAF Mast arm fitter for 2-3/8" OD horizontal arm; K Knuckle; T Trunnion; WB Wall Bracket, horizontal tenon with MAF; WM Wall mount bracket with decorative upswept arm; WA Wall mount bracket with adjustable arm

Color: BLT Black Matte Textured; BLS Black Gloss Smooth; DBT Dark Bronze Matte Textured; DBS Dark Bronze Gloss Smooth; GTT Graphite Matte Textured; LGS Light Grey Gloss Smooth; LGT Light Grey Gloss Textured; PSS Platinum Silver Smooth; WHT White Matte Textured; WHS White Gloss Smooth; VGT Verde Green Textured; Color Option: CC Custom Color

Options: F Fusing; E Battery Backup; 2PF Dual Power Feed; 2DR Dual Driver; TE Tooless Entry; BC Backlight Control; TB Terminal Block; LS Lumen Switch

Current — currentlighting.com/beacon
© 2024-2025 Current Lighting Solutions, LLC. All rights reserved. Information and specifications subject to change without notice. All values are design or typical values when measured under laboratory conditions.
Page 1 of 15 — Rev 07/07/25 — BEA_VIPERSPEC_R18

WALL MOUNTED FIXTURE:

HOLOPHANE® LEADER IN LIGHTING SOLUTIONS

Catalog Number | Notes | Type

HLWPC2
Wallpack® Full Cutoff LED



Mechanical
- Heavy grade A360 cast aluminum (aluminum with <1% copper)
- Exterior parts are protected by a zinc-infused Super Durable TGIC thermoset powder coat finish that provides superior resistance to corrosion and weathering
- Mounts to a standard junction box
- Wet location listed
- IP65 rated housing, down light only
- ¾" painted threaded entry(¾" - 14 NPT) on each side and on top, accepts ¾" and ½" conduit
- ¾" threaded plugs are painted on each side
- Vibration tested to 1.5G per ANSI C136.31.

Electrical
- Certified by UL or CSA
- Rated for -40°C (-40°F) minimum ambient
- A programmable electronic driver with 0-10V control leads
- Available in: 120-277V 50/60 Hz and 347-480V 50/60 Hz,
- Standard: 3000K, 4000K and 5000K CCT (>70 CRI)
- Optional >80 CRI (3000K, 4000K and 5000K CCT)
- Internally mounted emergency battery backup for operation in an ambient temperature ranging from -20°C (-4°F) to 30°C (86°F), available with P10 thru P40 performance packages, non CEC compliant
- All surge protection meets ANSI/IEEE C62.41.2 10kV/10kA
- Standard surge protection is 20kV/10kA per ANSI C136.2
- Optional surge protection is 10kV/5kA per ANSI C136.2

Optical
- Light engine housing is IP66 rated
- Acrylic optical system
- Type V: E (entry), M (medium), R (rectangle) & W (wide)
- Asymmetric

Controls
- Field adjustable output (AO)
- Button style photocontrol (PE)
- Motion sensor & ambient photocontrol combination for mounting low (8-15') (MASL) and high (15-30') (MASH) mounting heights

Certification and Standards
- Luminaire is CSA listed, US and Canada
- Suitable for operation in an ambient temperature up to 40°C/104°F per UL or CSA certification
- Design lights Consortium® (DLC) qualified product. Not all versions of this product may be DLC qualified. Please check the DLC Qualified Products List at www.designlights.org/QPL to confirm which versions are qualified.
- LM-79 compliant
- The projected LED Lumen Maintenance shall be based only on IES LM-80-08 and TM-21

Government Procurement
BAA – Buy America(n) Act: Product qualifies as a domestic end product under the Buy American Act as implemented in the FAR and DFARS. Product also qualifies as manufactured in the United States under DOT Buy America regulations.
BABA – Build America Buy America: Product qualifies as produced in the United States under the definitions of the Build America, Buy America Act.
Please refer to www.acuitybrands.com/buy-american for additional information.

Warranty
5-year limited warranty. This is the only warranty provided and no other statements in this specification sheet create any warranty of any kind. All other express and implied warranties are disclaimed. Complete warranty terms located at: www.acuitybrands.com/support/warranty/terms-and-conditions.

Note: Actual performance may differ as a result of end-user environment and application.
All values are design or typical values, measured under laboratory conditions at 25 °C.
Specifications subject to change without notice.

H F J G

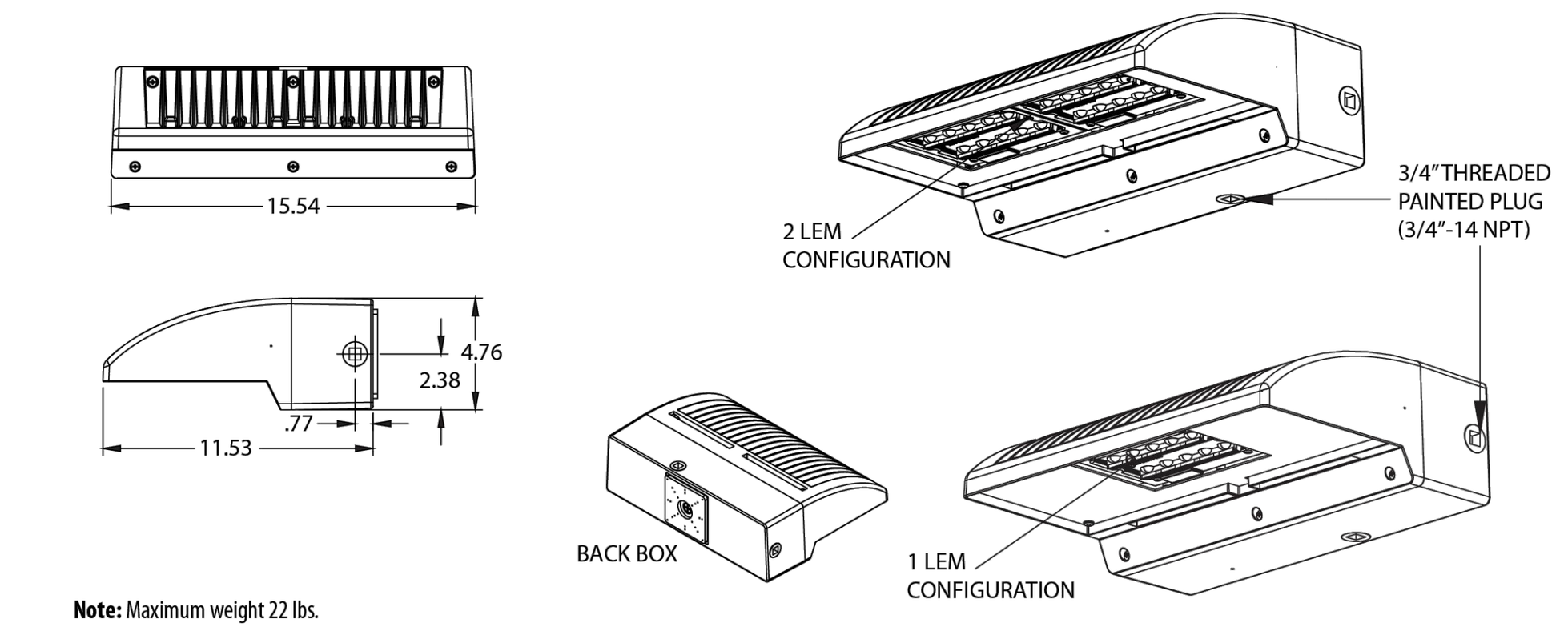

Note: Maximum weight 22 lbs.

AcuityBrands — Holophane | 1 Acuity Way, Decatur, GA 30035 | Phone: 866-HOLOPHANE | www.holophane.com | TechSupport-Lighting@Acuitybrands.com
© 2014-2025 Acuity Brands Lighting, Inc. All rights reserved. Rev. 09/02/25 Specifications subject to change without notice.
HLWPC2 Page 1 of 8

POST TOP LIGHT FIXTURE - SIMILAR TO EXISTING:

HOLOPHANE® LEADER IN LIGHTING SOLUTIONS

EX

Catalog Number DCLD-P2O-G1-30K-3LS-BK
Notes | Type EX



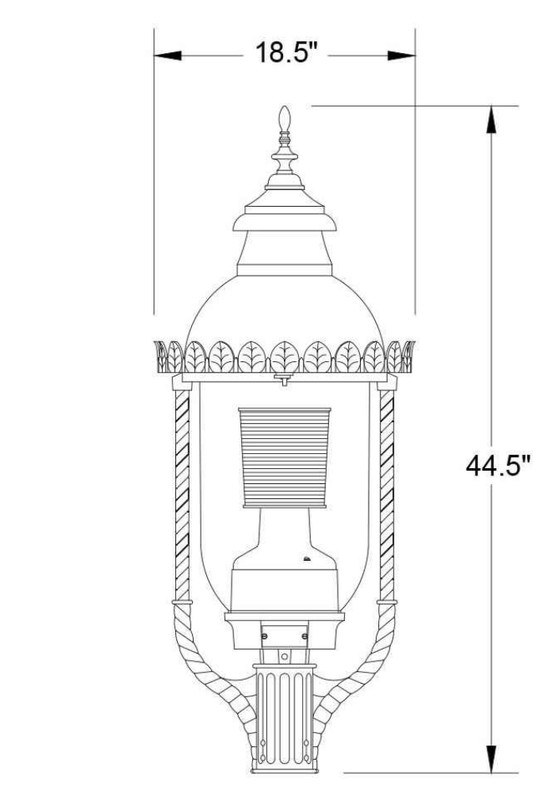

Maximum Weight: 30 lbs
Maximum Effective Projected Area (EPA): 2.19 sq ft

DCLD
Dorchester LED Standard Victorian Gas Light

ORDERING INFORMATION

Example: DCLD P20 G1 40K MVOLT VC 3LS GR

Series: DCLD Dorchester LED
LED Performance Package: P10 P10 LED Performance Package; P20 P20 LED Performance Package; P30 P30 LED Performance Package; P40 P40 LED Performance Package; P50 P50 LED Performance Package; *Refer to Option Matrix. Performance Package based on Optic*
Generation: G1 Generation 1
LED Color temperature: 27K 2700K CCT; 30K 3000K CCT; 40K 4000K CCT
Voltage: MVOLT Auto-Sensing 120-277V 50/60 HZ; HVOLT Auto-Sensing 347-480V 50/60 HZ
Housing Style: VC Victorian Style Standard Base

Optics: 3LS Type III, stalk; 5LS Type V, stalk
Housing Colors: BK Black; BZ Bronze; GH Graphite; GN Green; GR Grey; PP Prime Paint; WH White; CMC CustomMatchColor Finish; XX STD Finish, TBD; RALxxxxSDCR RAL Super Durable Corrision Resistant, 80% Gloss Paint, replace xxxx with RAL number.
Options:
DRIVER ELECTRICAL OPTIONS: 20KV Extreme surge protection 20kV/10kA, fail off with indicator light
PARTIALLY FROSTED OUTER CYLINDER OPTIONS: VCOC Visual Comfort Outer Cylinder, bottom 25% frosted
PREWIRED LEAD OPTIONS: L1H 1.5FT Prewired Leads; L03 3FT Prewired Leads; L10 10FT Prewired Leads; L20 20FT Prewired Leads
NEMA LABEL OPTIONS: NL1X1 1"X1" ANSI Wattage Label; NL3X3 3" x 3" ANSI Wattage Label

AcuityBrands — Holophane | One Lithonia Way, Conyers, GA 30012 | Phone: 866-HOLOPHANE | www.holophane.com | techsupportinf@acuitybrands.com
© 2020-2024 Acuity Brands Lighting, Inc. All rights reserved. Rev. 03/07/24 Specifications subject to change without notice.
DCLDs Page 1 of 4

BOLLARD LIGHT FIXTURE:

KIM LIGHTING® — B A C

DATE: | LOCATION: 137 N. Chestnut, Village of New Paltz, NY
TYPE: H | PROJECT: TRAIL LINK
CATALOG #: PA7R-CT-LV-Type V-12L-020-3K7-42A-DBT-UNV

PA7R
BOLLARD

ORDERING GUIDE

Example: PA7R-FT-NU-1-12L-010-5K7-24A-BLS-UNV-EM

CATALOG # PA7R-CT-NU-Type III, III HS or V-12L-020-3K7-42A-DBT-UNV

HOUSING

PA7R | CT | LV | CT | 12L-020-3K7

Model: PA7R Pavilion 7" Ø Round
Top: FT Flat Top; CT [1] Crowned Top
Optics: NU No Up-light; CH Clear Horizontal Lens; CL [2] Clear Vertical Lens; DL [2,3] Diffuse Vertical Lens; LV Louvers; GC Grille with clear vertical lens; GD [3] Grille with diffuse vertical lens
Distribution: 1 Type I; 2 Type II; 3 Type III; 3HS Type III + House side shield; 4 Type IV; 5 Type V
Light Engine [13]: 12L-010-AMB [10] 14W, Monochromatic Amber; 12L-010-3K7 14W (1000 nominal lm), 3000K, 70 CRI; 12L-010-4K7 14W (1000 nominal lm), 4000K, 70 CRI; 12L-010-5K7 14W (1000 nominal lm), 5000K, 70 CRI; 12L-020-AMB [10] 22W Monochromatic Amber; 12L-020-3K7 22W (2000 nominal lm), 3000K, 70 CRI; 12L-020-4K7 22W (2000 nominal lm), 4000K, 70 CRI; 12L-020-5K7 22W (2000 nominal lm), 5000K, 70 CRI; Consult factory for other CCTs (2700K - 6500K) and CRIs (80, 90 CRI)

42A | DBT | UNV

Body: 24A 24" OAH, Aluminum; 42A 42" OAH, Aluminum; 42BR-C 42" OAH, Brown Concrete; 42CH-C 42" OAH, Charcoal Concrete; 42NG-C 42" OAH, Natural Gray Concrete; 42WH-C 42" OAH, White Concrete; 42A-ROP [4] 42" OAH, Aluminum + Dual Receptacle Outlet Panel and Cover; 42A-ROP-L [4] 42" OAH, Aluminum + Dual Receptacle Outlet Panel and Locking Cover; 42A-2GEB 42" OAH, Aluminum + Integral Recessed 2 Gang Electrical Box; 42A-SG3 42" OAH, Aluminum + Speaker Grille Enclosure for 3" Ø speaker; 44A 44" Non-Impact Resistant OAH, Aluminum; 44A-ROP 44" Non-Impact Resistant OAH, Aluminum + Dual Receptacle Outlet Panel and Cover; 44A-ROP-L 44" Non-Impact Resistant OAH, Aluminum + Dual Receptacle Outlet Panel and Locking Cover; 44A-2GEB 44" Non-Impact Resistant OAH, Aluminum + Integral Recessed 2 Gang Electrical Box; 44A-SG3 44" Non-Impact Resistant OAH, Aluminum + Speaker Grille Enclosure for 3" Ø speaker; For Impact Rated 44" OAH Round Pavilion
Fixture Finish: BLS Black Gloss Smooth; BLT Black Matte Textured; DBS Dark Bronze Gloss Smooth; DBT Dark Bronze Matte Textured; GTT Graphite Matte Textured; LGS Light Grey Gloss Smooth; LGT Light Grey Matte Textured; PSS Platinum Silver Gloss Smooth; VGT Verde Green Matte Textured; WHS White Gloss Smooth; WHT White Matte Textured; Color Option: CC [11] Custom Color
Voltage: UNV 120-277V; 120 [6] 120V; 277 [6] 208-277V; 347 [6] 347V; 480 [6] 480V
Options: EM [7] Battery Backup; LR [8] Luminous Accent; SF [9] Single Fuse; DF [9] Double Fuse

1 Adds .6 / 15mm to OAH (over all height).
2 CL and DL configurations shall be IK04
3 Only Available with 1 Type I or 5 Type V distributions only.
4 For GFCI/USB limited voltage to 120VAC only.
6 Dedicated input voltage, required for MW Motions sensing.
7 0°C min starting temperature, 90+ minute run time, output equivalent to 12L-010-#K7
8 Adds +5 watts and 1" / 254mm to overall height.
9 SF for 120, 277 and 347 input voltage, DF for 208, 240 and 480 input voltage.
10 Turtle friendly
11 Consult factory for custom color, marine and corrosive finish options
12 5-step MacAdam Ellipse Binning standard. Consult factory for 3-step MacAdam Ellipse Binning.

Current — currentlighting.com/kimlighting
© 2024 HLI Solutions, Inc. All rights reserved. Information and specifications subject to change without notice. All values are design or typical values when measured under laboratory conditions.
Page 2 of 22 — Rev 06/04/24 — kl_pa7r_spec_R08

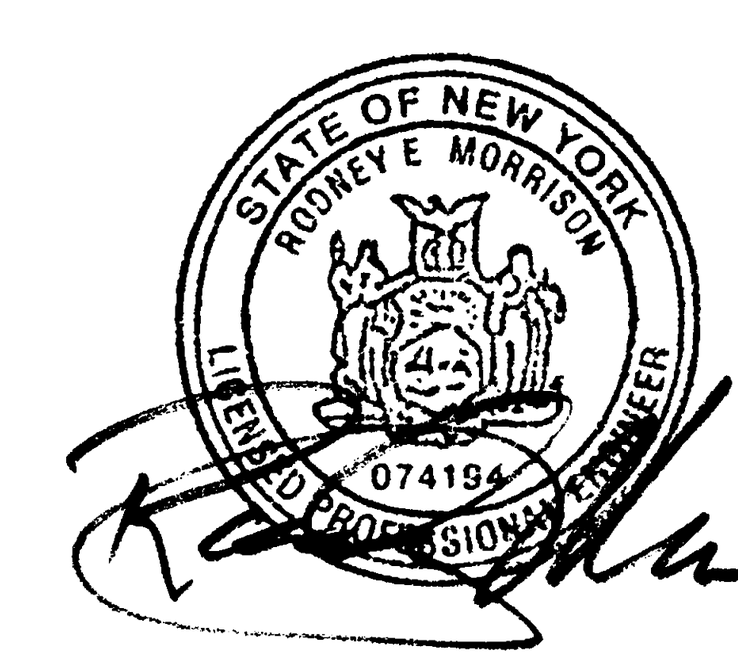

No.	Date	Revisions
1.	2025-09-09	SITE PLAN FOR ZBA SUBMISSION
2.	2025-09-30	CITY PLANNING BOARD SUBMISSION
3.	2025-12-03	CITY PLANNING BOARD SUBMISSION

LRC Engineering & Surveying
- Civil Engineering
- Land Surveying
- Landscape Architecture
- Land Planning
- Laser Scanning & BIM
- Subsurface Utility Engineering

Land Resource Consultants Engineering & Surveying, LLC
D.B.A. Loureiro NY, P.C.
85 Civic Center Plaza, Suite 204
Poughkeepsie NY 12601
Tel: 845.243.2880
160 West Street, Suite E
Cromwell, CT 06416
Tel: 860.635.2877
www.lrcconsult.com

SITE LIGHTING PLAN

WATER STREET DEVELOPMENT

141 NORTH WATER STREET
CITY OF POUGHKEEPISE, DUTCHESS COUNTY, NEW YORK

Design/Calcs	BLS	CAD File		Sheet No.
Drawn	SMC	Project No.	22–2985	LP-1
Checked	KFC	Date	2025–07–22	
Approved	LRC	Scale	1"=20'	SHEET 9 OF 18

X:\JOBS\Jobs 2022\22-2985-141 North Water Street Pok-Sunrise Developers Corp\DWG\LP22298501.dwg 12/1/2025 11:05 AM SCurran

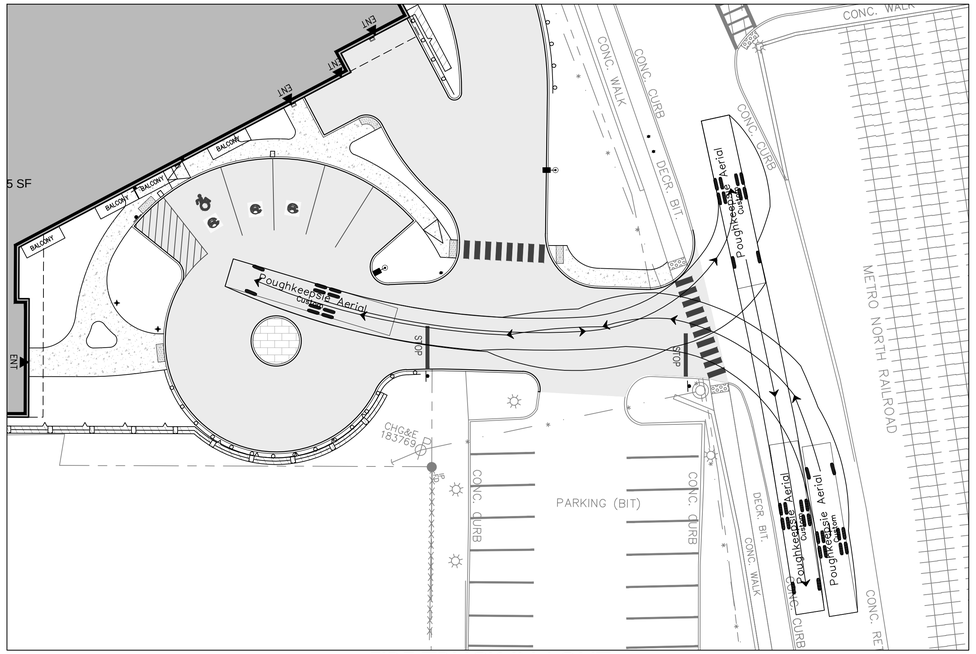

FIRE TRUCK IN / OUT

1"=20'

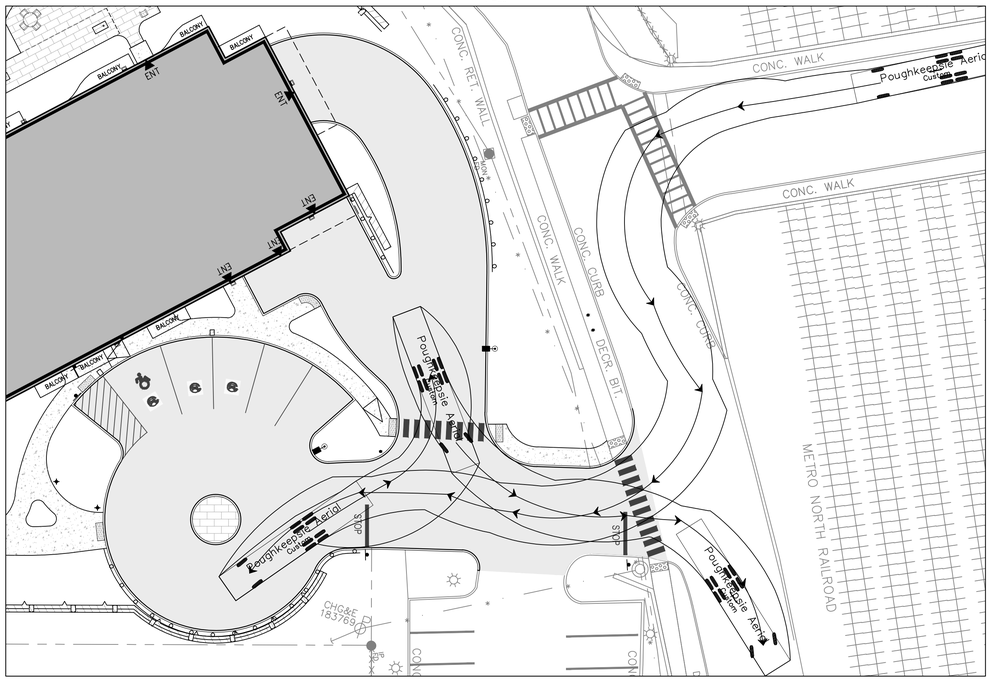

FIRE TRUCK IN

1"=20'

GRAPHIC SCALE

20 10 0 20

SCALE IN FEET

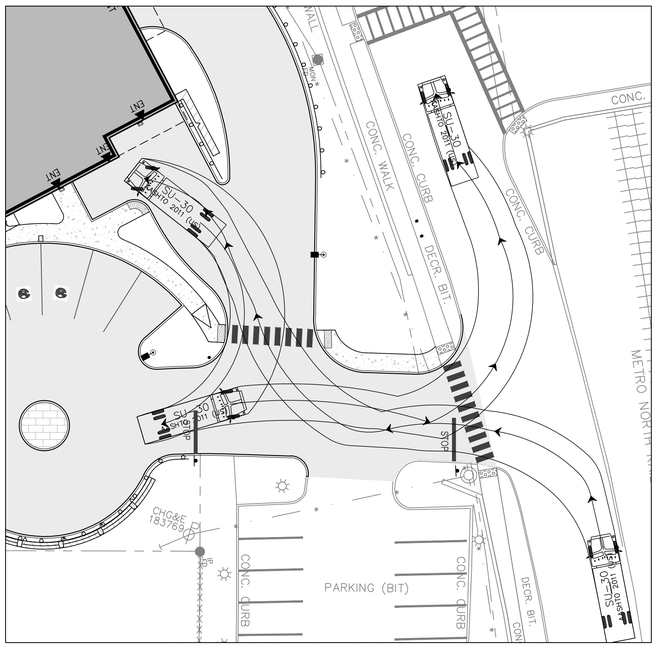

REFUSE ENCLOSURE MOVEMENT

1"=20'

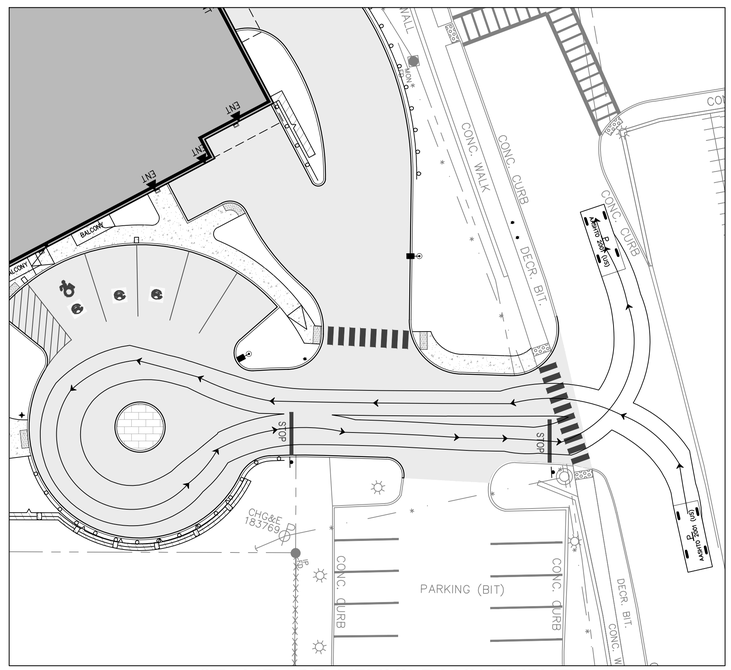

STANDARD VEHICLE MOVEMENT

1"=20'

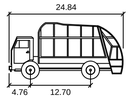

Refuse Vehicle

	feet
Width	: 7.87
Track	: 7.41
Lock to Lock Time	: 6.0
Steering Angle	: 26.5

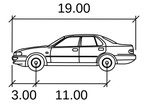

P

	feet
Width	: 7.00
Track	: 6.00
Lock to Lock Time	: 6.0
Steering Angle	: 31.6

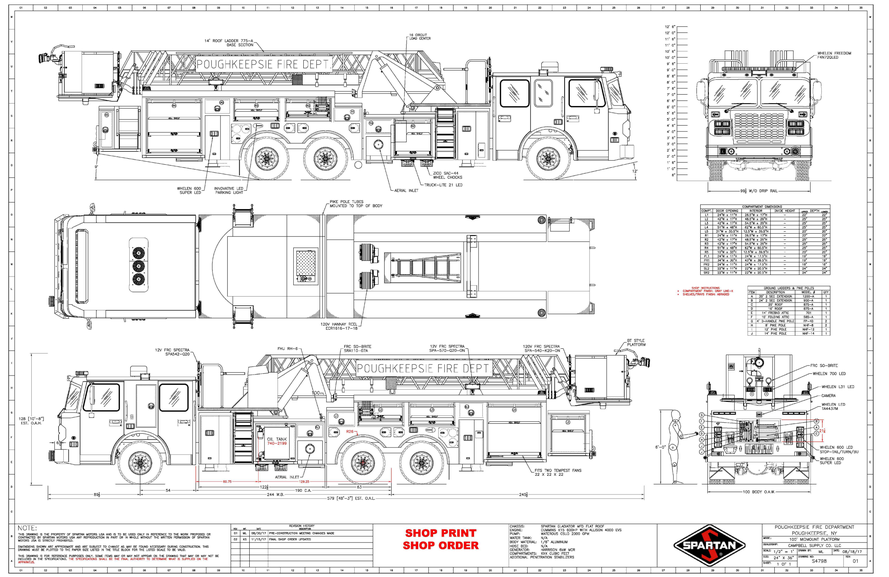

SPARTAN FIRE TRUCK UTILIZED FOR ALL FIRE TRUCK MOVEMENTS

STATE OF NEW YORK
RODNEY E. MORRISON
074154
LICENSED PROFESSIONAL ENGINEER

No.	Date	Revisions
1.	2025-09-09	SITE PLAN FOR ZBA SUBMISSION
2.	2025-09-30	CITY PLANNING BOARD SUBMISSION
3.	2025-12-03	CITY PLANNING BOARD SUBMISSION

LRC Engineering & Surveying

- Civil Engineering
- Land Surveying
- Landscape Architecture
- Land Planning
- Laser Scanning & BIM
- Subsurface Utility Engineering

Land Resource Consultants Engineering & Surveying, LLC
D.B.A. Loureiro NY, P.C.
85 Civic Center Plaza, Suite 204
Poughkeepsie NY 12601
Tel: 845.243.2880
160 West Street, Suite E
Cromwell, CT 06416
Tel: 860.635.2877
www.lrcconsult.com

TRUCK TURNING PLAN

WATER STREET DEVELOPMENT

141 NORTH WATER STREET
CITY OF POUGHKEEPSIE, DUTCHESS COUNTY, NEW YORK

Design/Calcs	BLS	CAD File	
Drawn	SMC	Project No.	22-2985
Checked	KFC	Date	2025-07-22
Approved	LRC	Scale	1"=20'

Sheet No. TT-1

SHEET 10 OF 18

X:\JOBS\Jobs 2022\22-2985-141 North Water Street Pok-Sunrise Developers Corp\DWG\TT22298501.dwg 12/1/2025 11:06 AM SGurron

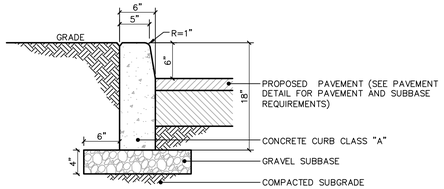

NOTES:

1. COMPACT NATIVE MATERIAL PRIOR TO INSTALLATION OF STONE SUBBASE. SEE NOTE SHEET SC-1 FOR COMPACTION REQUIREMENTS.

1 ON-SITE CONCRETE CURB DETAIL
SCALE: 1" = 1'-0"

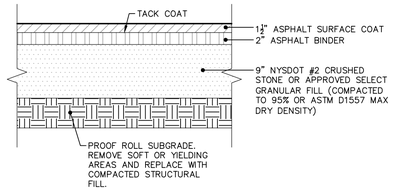

2 STANDARD ASPHALT PAVING DETAIL
SCALE: 1" = 1'-0"

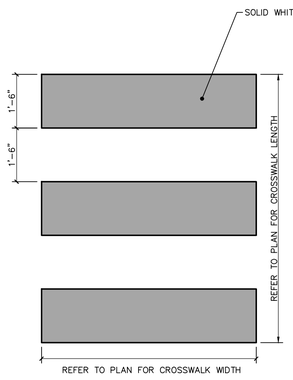

3 CROSSWALK STRIPING DETAIL
SCALE: 1/2" = 1'-0"

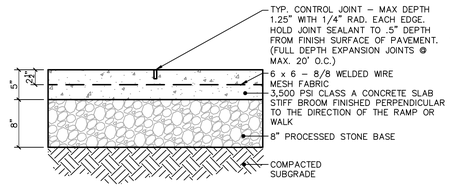

4 CONCRETE SIDEWALK SECTION DETAIL
SCALE: 1" = 1'-0"

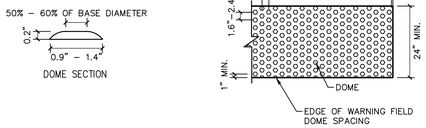

NOTES:

1. THE DETAILS PROVIDED ARE NOT DRAWN TO SCALE, THE QUANTITY OF DOMES DEPICTED ON THE DETECTABLE WARNING UNIT (THE DOMES AND THE ENTIRE 24" LEVEL SURFACE) IS FOR ILLUSTRATION ONLY.
2. THE SIZE OF THE DETECTABLE WARNING FIELD SHALL BE 24" IN THE DIRECTION OF TRAVEL AND SHALL EXTEND THE FULL WIDTH OF THE CURB RAMP OR FLUSH SURFACE.
3. THE ROWS OF DOMES SHALL BE ALIGNED TO BE PERPENDICULAR OR RADIAL TO THE GRADE BREAK BETWEEN THE RAMP LANDING OR CURB RAMP AND THE STREET.
4. WHERE DOMES ARE ARRAYED RADIALLY THEY MAY DIFFER IN DOME DIAMETER AND CENTER-TO- CENTER SPACING WITHIN THE RANGES SPECIFIED ON THIS SHEET.
5. THE DETECTABLE WARNING FIELD SHALL BE THE COLOR SPECIFIED IN THE CONTRACT DOCUMENTS OR MEET THE REQUIREMENTS OF THE STANDARD SPECIFICATIONS.
6. DETECTABLE WARNING SHALL BE LOCATED SO THAT THE EDGE OR CORNER OF THE WARNING FIELD NEAREST TO THE ROADWAY IS 5" TO 9" FROM THE FRONT OF THE CURB OR THE ROADWAY EDGE (12" WHERE TRAVERSABLE CURB IS USED). INSTALL THE DETECTABLE WARNING FIELD BEHIND THE FLUSH CURB.
7. THE EDGE OF THE DETECTABLE WARNING FIELD NEAREST TO A RAILROAD CROSSING SHALL BE 6'-0" MINIMUM AND 15'-0" MAXIMUM FROM THE CENTERLINE OF THE NEAREST RAIL.

DETECTABLE WARNING TILE SPECS

"DURALAST" CAST IRON WARNING TILES AS FABRICATED BY EAST JORDAN IRON WORKS, 800-626-4653; NATURAL FINISH (NO POWDER COATING)

NOTE: UNIT SIZE FOR RECTANGULAR APPLICATIONS IS 24"x24" AND FOR RADIAL APPLICATIONS IS 18"x24"

9 DETECTABLE WARNING DETAIL
SCALE: 1/2" = 1'-0"

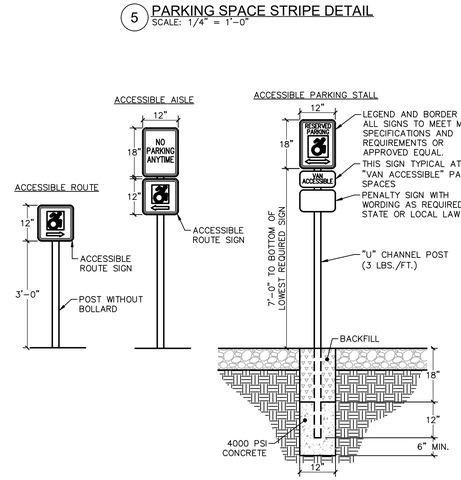

5 PARKING SPACE STRIPE DETAIL
SCALE: 1/4" = 1'-0"

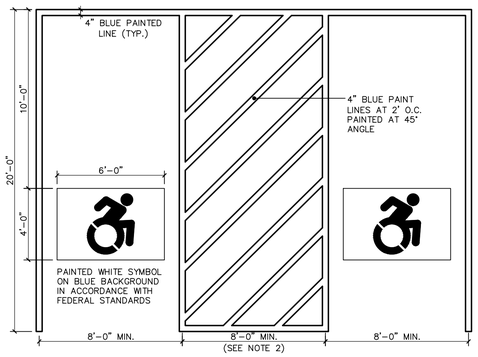

NOTES:

1. SEE SITE PLAN FOR ACCESSIBLE SPACE LOCATION AND DIMENSIONS.
2. PROVIDE 2 COATS OF PAINT ON ALL SURFACES.

6 TYPICAL ACCESSIBLE PARKING SPACE DETAIL
SCALE: 1/4"=1'-0"

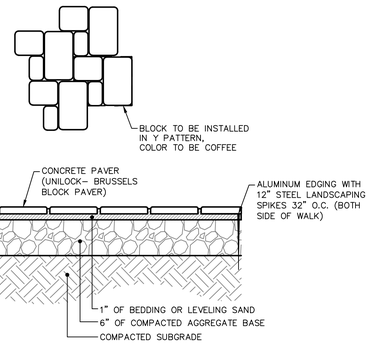

NOTES:

1. INSTALL PER MANUFACTURERS SPECIFICATIONS.
2. DIMENSIONS WILL VARY BY MANUFACTURER. PRODUCT TO MATCH DETAIL OR APPROVED EQUIVALENT.

7 CONCRETE PAVER DETAIL
SCALE: 1" = 1'-0"

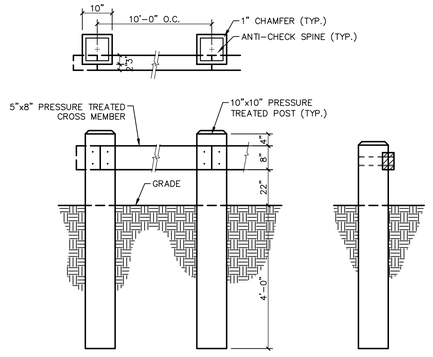

8 WOODEN GUIDERAIL DETAIL
SCALE: 1/2" = 1'-0"

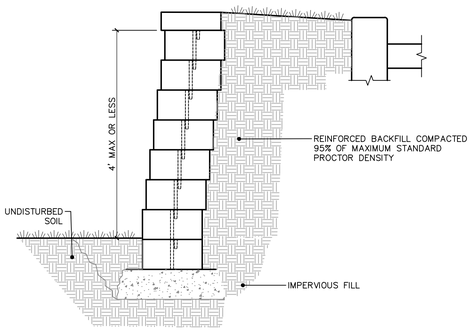

11 SEG BLOCK RETAINING WALL DETAIL
SCALE: N.T.S.

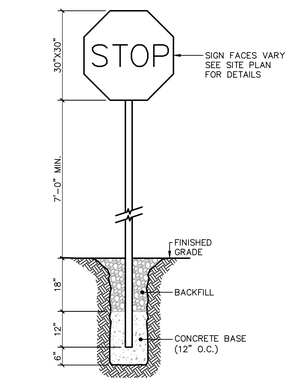

NOTE:

1. CONSTRUCT SIGN IN ACCORDANCE WITH CURRENT NYSDOT AND MUTCD STANDARDS.

12 SIGN WITH CONCRETE BASE DETAIL
SCALE: 1/2" = 1'-0"

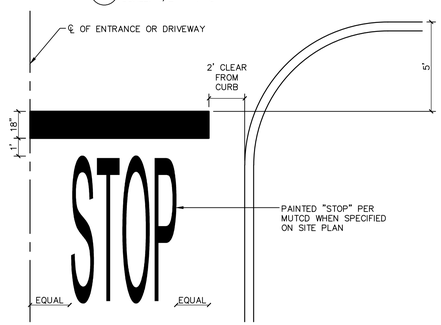



13 STOP BAR DETAIL
SCALE: 1/4"=1'-0"

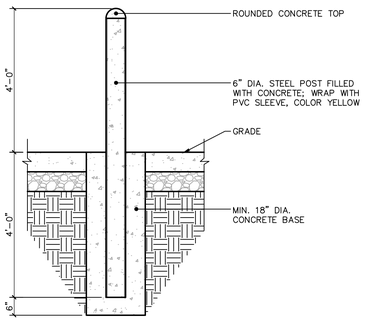

14 CONCRETE FILLED STEEL BOLLARD
SCALE: 1/2" = 1'-0"

10 ACCESSIBLE PARKING & ACCESS SIGNS
SCALE: 1/2" = 1'-0"

No.	Date	Revisions
1.	2025-09-09	SITE PLAN FOR ZBA SUBMISSION
2.	2025-09-30	CITY PLANNING BOARD SUBMISSION
3.	2025-12-03	CITY PLANNING BOARD SUBMISSION

LRC Engineering & Surveying

- Civil Engineering
- Land Surveying
- Landscape Architecture
- Land Planning
- Laser Scanning & BIM
- Subsurface Utility Engineering

Land Resource Consultants Engineering & Surveying, LLC
D.B.A. Loureiro NY, P.C.
85 Civic Center Plaza, Suite 204
Poughkeepsie NY 12601
Tel: 845.243.2880
160 West Street, Suite E
Cromwell, CT 06416
Tel: 860.635.2877
www.lrcconsult.com

SITE DETAILS

WATER STREET DEVELOPMENT

141 NORTH WATER STREET
CITY OF POUGHKEEPSIE, DUTCHESS COUNTY, NEW YORK

Design/Calcs	BLS	CAD File	DN22298501-SITE.dwg	Sheet No.	DN-1
Drawn	SMC	Project No.	22-2985		
Checked	KFC	Date	2025-07-22		
Approved	LRC	Scale	AS NOTED	SHEET 11 OF	18

X:\JOBS\Jobs 2022\22-2985-141 North Water Street Pok-Sunrise Developers Corp\DWG\DN22298501-SITE.dwg 12/1/2025 11:07 AM Sourcin

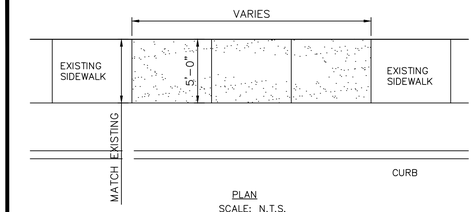

NOTES:
1. WHERE MATERIAL IS NOT USED THE CITY OF POUGHDEEPSIE WILL BE CREDITED IN AREAS WHERE MORE THAN THE SPECIFIED AMOUNT OF MATERIAL IS USED. MAJOR GRADE CHANGES WILL BE APROVED BY THE CITY ENGINEERING DEPT. AND WILL BE PAYED UNDER APROPRIATE ITEMS.

SIDEWALK DETAIL REPLACE & NEW

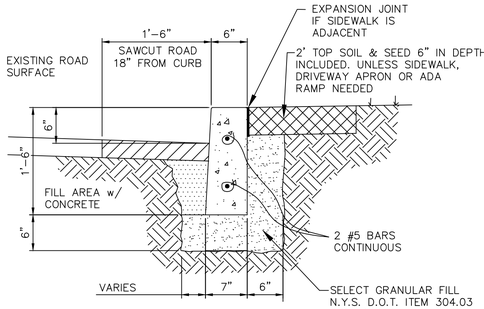

FORMED CURB DETAIL

SCALE: 1"=1'-0"

CITY OF POUGHKEEPSIE ENGINEERING DEPARTMENT		SIDEWALK DETAIL
62 CIVIC CENTER PLAZA POUGHKEEPSIE, NY 12602	PROJECT: 001-DET DATE: 5-16-00 SCALE: AS NOTED DRAWN BY: JP	

DETAILS PROVIDED BY THE CITY OF POUGHKEEPSIE. FOR ALL WORK TO BE PERFORMED IN THE CITY ROW.

CITY OF POUGHKEEPSIE ENGINEERING DEPARTMENT		FORMED CURB DETIAL
62 CIVIC CENTER PLAZA POUGHKEEPSIE, NY 12602	FILE NO.: 001-DET DATE: 3-6-00 SCALE: AS NOTED DRAWN BY: JP	

DETAILS PROVIDED BY THE CITY OF POUGHKEEPSIE. FOR ALL WORK TO BE PERFORMED IN THE CITY ROW.

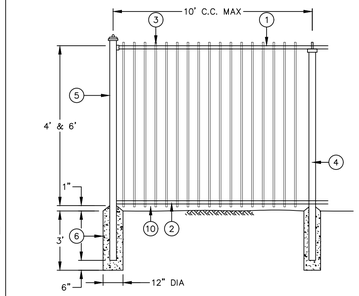

1. TOP RAIL 1" X 1" BLACK POWDERCOATED ALUMINUM TUBES
2. BOTTOM RAIL 1" X 1" BLACK POWDERCOATED ALUMINUM TUBES
3. 5/8TH X 5/8TH BLACK POWDERCOATED ALUMINUM TUBES SPACED EQUALLY ACROSS PANEL (4" SPACING MAX)
4. INTERMEDIATE POST 2" X 2" BLACK POWDERCOATED ALUMINUM
5. CORNER POST 2.5" X 2.5" BLACK POWDERCOATED ALUMINUM
6. CONCRETE FOOTING 36" DEEP WITH 12" DIA. AT END POST AND 10" DIA. AT INTERMEDIATE POST. HOLE CORE IN UNDISTURBED OR COMPACTED SOIL.
7. MAX FENCE CLEARANCE 2" FROM GRADE

2 CAST IRON TYPE FENCE DETAIL

NOT TO SCALE (MADE OF ALUMINUM)

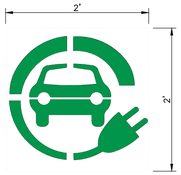

8 EV CHARGING STATION PAVEMENT MARKING DETAIL

SCALE: 1" = 1'-0"

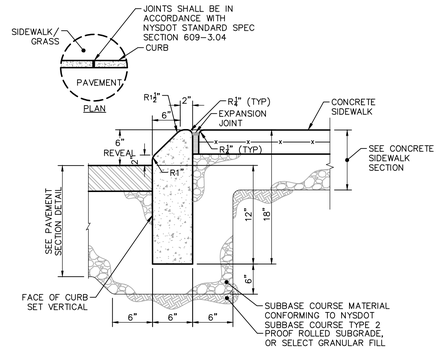

NOTES
1. CONCRETE CURB SHALL BE IN ACCORDANCE WITH NYSDOT STANDARD SPECIFICATION SECTION 609.
2. PRECAST CONCRETE CURB MAY BE SUBSTITUTED WHEN ALTERNATE CONSTRUCTION DETAILS ARE SUBMITTED BY THE CONTRACTOR AND APPROVED BY THE ENGINEER.

3 CAST IN PLACE MOUNTABLE CURB DETAIL

SCALE: NOT TO SCALE

4 CONCRETE FILLED STEEL BOLLARD (EVCS)

SCALE: 1/2" = 1'-0"

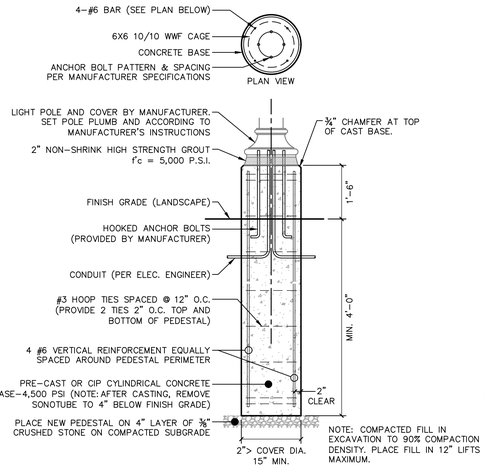

5 CONC. LIGHT POLE BASE-ROUND

SCALE: 1/2" = 1'-0"

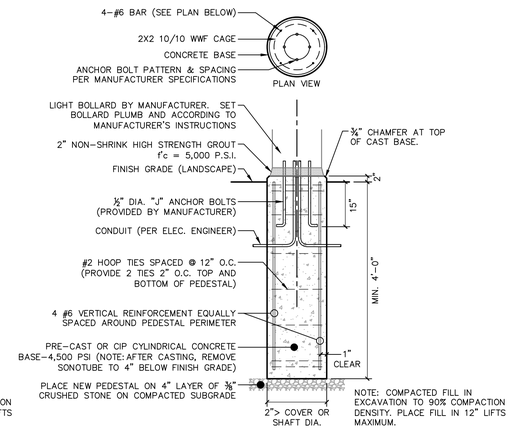

6 CONC. LIGHT BOLLARD BASE-ROUND

SCALE: 1/2" = 1'-0"

-chargepoint+

ChargePoint® Express 280



Architectural Drawings

Note: Images are not to scale. Measurements appear in metric units (mm), followed by imperial equivalents (inches).

Express 280

Express 280, with Tall CMK, and dual CCS1 connectors.

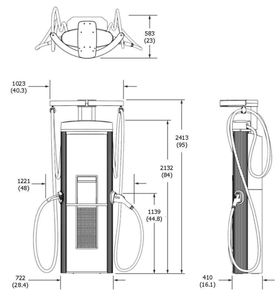

ChargePoint, Inc. reserves the right to alter product offerings and specifications at any time without notice and is not responsible for typographical or graphical errors that may appear in this document.

ChargePoint, Inc. | Copyright © 2024

5

7 EV CHARGING STATION UNIT

NOT TO SCALE

Revisions		
1.	2025-09-09	SITE PLAN FOR ZBA SUBMISSION
2.	2025-09-30	CITY PLANNING BOARD SUBMISSION
3.	2025-12-03	CITY PLANNING BOARD SUBMISSION



LRC Engineering & Surveying

- Civil Engineering
- Land Surveying
- Landscape Architecture
- Land Planning
- Laser Scanning & BIM
- Subsurface Utility Engineering

Land Resource Consultants Engineering & Surveying, LLC
D.B.A. Lourenco NY, P.C.

85 Civic Center Plaza, Suite 204
Poughkeepsie NY 12601
Tel: 845.243.2880

160 West Street, Suite E
Cromwell, CT 06416
Tel: 860.635.2877
www.lrceonsult.com

SITE DETAILS

WATER STREET DEVELOPMENT

141 NORTH WATER STREET
CITY OF POUGHKEEPSIE, DUTCHESS COUNTY, NEW YORK

Design/Calcs	BLS	CAD FIL	DN22298502-SITE.dwg	Sheet No.
Drawn	SMC	Project No.	22-2985	DN-2
Checked	KFC	Date	2025-07-22	SHEET 12 OF 18
Approved	LRC	Scale	AS NOTED	

X:\JOBS\Jobs 2022\22-2985-141 North Water Street Pak-Sunrise Developers Corp\DWG\DN22298502-SITE.dwg 12/1/2025 11:07 AM SCurran

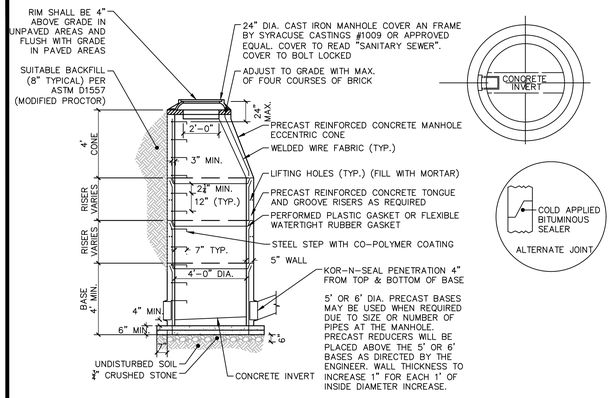

1 SANITARY SEWER MANHOLE DETAIL
SCALE: 1/4" = 1'-0"

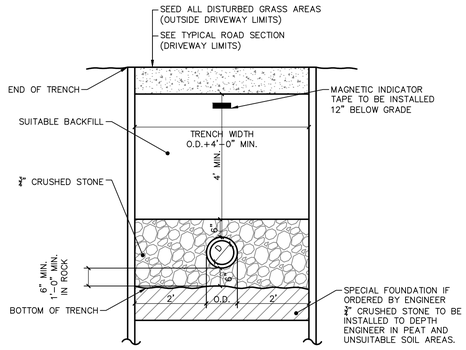

NOTES:
1. IF COVER IS LESS THAN 4 FEET, INSULATION IS REQUIRED.
2. SEE THIS SHEET FOR SUBGRADE AND BACKFILL PLACEMENT AND COMPACTION REQUIREMENTS.

2 SANITARY SEWER TRENCH DETAIL
SCALE: 1/2" = 1'-0"

NOTES:

1. DOUBLE CLEANOUT TO BE INSTALLED ON ALL SEWER LATERALS WITHIN 10 FEET OF BUILDING FACE.
2. ANY LOCATIONS WITHIN PAVED AREAS SHALL HAVE COVERS THAT ARE H-20 LOAD RATED. ALL COVERS WHETHER IN PAVEMENT OR GRASS SHALL BE LABELED "SEWER".
3. ALL RISERS ARE TO MATCH THE SIZE OF THE SANITARY LINE.
4. IN LAWN AREAS INSTALL CONCRETE COLLAR 3 INCHES BELOW GRADE. COVER WITH TOP SOIL OR OTHER SURFACE TREATMENT AS DESIGNATED ON LANDSCAPE PLANS.

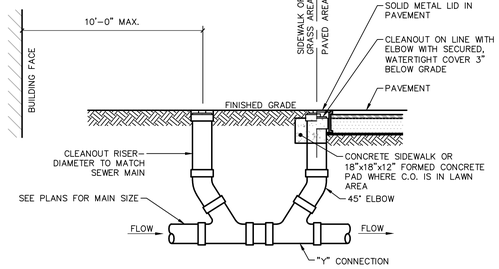

3 DOUBLE SANITARY SEWER CLEANOUT DETAIL
SCALE: N.T.S.

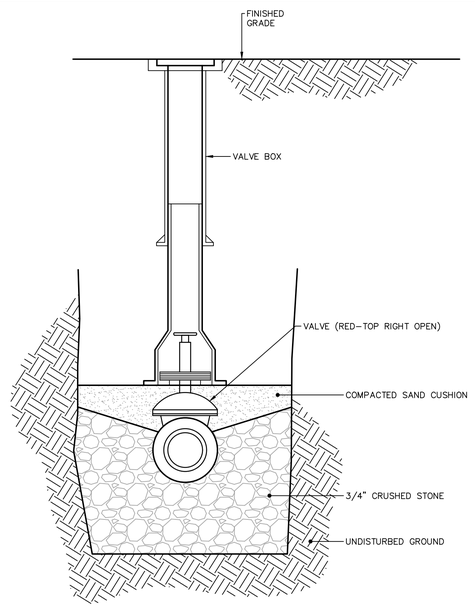

4 VALVE AND VALE BOX DETAIL
SCALE: 1" = 1'-0"

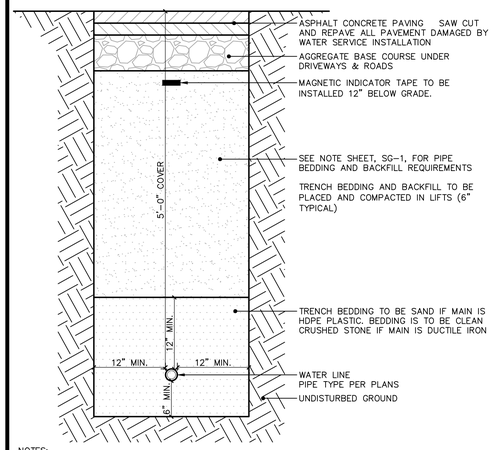

NOTES:
1. SEE NOTE SHEET SG-1 FOR SUBGRADE AND BACKFILL PLACEMENT AND COMPACTION REQUIREMENTS.
2. SEE WATER NOTES ON SHEET SG-1 FOR ADDITION DETAILS

5 WATER MAIN TRENCH DETAIL
SCALE: 1" = 1'-0"

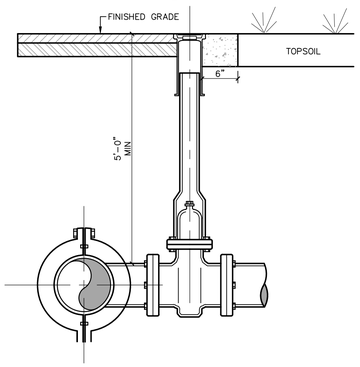

NOTES:
1. WET TAP OF WATER MAIN SHALL BE PERFORMED UNDER THE SUPERVISION OF THE ENGINEER, AND THE CITY OF POUGHKEEPSIE WATER DEPARTMENT.
2. TAPPING SLEEVE AND VALVE SUPPORT SHALL BE COORDINATED WITH THE ENGINEER TO SUIT FIELD CONDITIONS.
3. MINIMUM DISTANCE TO JOINTS, FITTINGS, OR OTHER WET TAPS OR STOPS SHALL BE 3 FEET.
4. VALVE OPERATING DIRECTION SHALL BE CLOCKWISE TO OPEN (TURNING RIGHT TO OPEN).
5. STAINLESS STEEL TAPPING SLEEVE SHALL BE SELECTED TO FIT EXISTING PIPE MATERIAL (C.I., D.I., A.C.) AND OUTSIDE DIAMETERS.
6. TAPPING SLEEVE, RESILIENT WEDGE VALVE & VALVE BOX SHALL BE IN ACCORDANCE WITH CITY OF POUGHKEEPSIE STANDARDS & AS MANUFACTURED BY (MUELLER) OR APPROVED EQUIVALENT.
7. ALL JOINTS SHALL UTILIZE MEGA LUG RETAINER GLAND.
8. PIPE BEDDING AND BACKFILL TO BE INSTALLED IN ACCORDANCE WITH PIPE TRENCHING DETAIL.

6 WATER TAPPING SLEEVE AND VALVE DETAIL
SCALE: 1" = 1'-0"

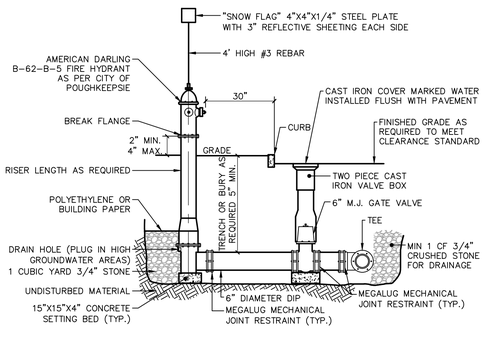

NOTES:
1. PROPOSED LOCATIONS OF HYDRANTS TO BE FIELD LOCATED (STAKED) AND APPROVED BY WATER SUPERINTENDENT PRIOR TO INSTALLATION
2. HYDRANT WITH PROPER RISER LENGTH (DEPTH OF BURY) SHALL BE INSTALLED AS REQUIRED TO MEET THE 2" MIN. TO 4" MAX. CLEARANCE BETWEEN THE CENTER OF THE BREAK FLANGES AND THE ASPHALT CONCRETE PAD.
3. ALL HYDRANTS TO MEET SPECIFICATIONS OF CITY OF POUGHKEEPSIE STANDARDS.
4. FIRE HYDRANT TO BE FLOW TESTED AND BANDED IN ACCORDANCE WITH NFPA STANDARDS.
5. HYDRANTS TO BE AMERICAN DARLING B-62-B-5 (NO SUBSTITUTIONS OR EXCEPTIONS).

7 HYDRANT AND VALVE ASSEMBLY DETAIL
SCALE: 1/2" = 1'-0"

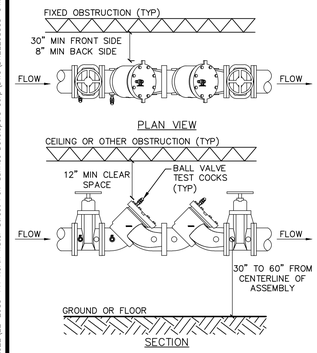

NOTES:
1. ASSEMBLY TO BE INSTALLED HORIZONTALLY.
2. WATTS SERIES LF709 6" DOUBLE CHECK VALVE OR APPROVED EQUAL.
3. DCV TO BE INSTALLED IN MECHANICAL SPACE AND MUST MEET ALL CLEARANCES AS OUTLINED ABOVE.
4. ASSEMBLY TO BE TESTED BY A LICENSED BACKFLOW PREVENTION DEVICE TESTER AFTER INSTALLATION AND PRIOR TO ACTIVATION OF NEW WATER SUPPLY. THE RESULTS MUST BE SUBMITTED TO THE CITY OF POUGHKEEPSIE AS PART OF THE ENGINEER'S CERTIFICATION.
5. ASSEMBLY MUST BE TESTED ANNUALLY BY A LICENSED BACKFLOW PREVENTION TESTER. COPIES OF THE TEST RESULTS MUST BE SUBMITTED TO THE OWNER, CITY OF POUGHKEEPSIE WATER DEPARTMENT.

FIRE SUPPLY DOUBLE CHECK VALVE DETAIL
SCALE: N.T.S.

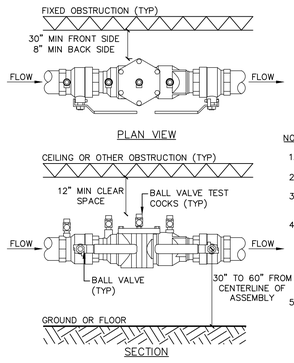

NOTES:
1. ASSEMBLY TO BE INSTALLED HORIZONTALLY.
2. WATTS SERIES LF007 4" DOUBLE CHECK VALVE OR APPROVED EQUAL.
3. DCV TO BE INSTALLED IN MECHANICAL SPACE AND MUST MEET ALL CLEARANCES AS OUTLINED ABOVE.
4. ASSEMBLY TO BE TESTED BY A LICENSED BACKFLOW PREVENTION DEVICE TESTER AFTER INSTALLATION AND PRIOR TO ACTIVATION OF NEW WATER SUPPLY. THE RESULTS MUST BE SUBMITTED TO THE CITY OF POUGHKEEPSIE AS PART OF THE ENGINEER'S CERTIFICATION.
5. ASSEMBLY MUST BE TESTED ANNUALLY BY A LICENSED BACKFLOW PREVENTION TESTER. COPIES OF THE TEST RESULTS MUST BE SUBMITTED TO THE OWNER, CITY OF POUGHKEEPSIE WATER DEPARTMENT,

DOMESTIC DOUBLE CHECK VALVE DETAIL
SCALE: N.T.S.

No.	Date	Revisions
1.	2025-09-09	SITE PLAN FOR ZBA SUBMISSION
2.	2025-09-30	CITY PLANNING BOARD SUBMISSION
3.	2025-12-03	CITY PLANNING BOARD SUBMISSION

STATE OF NEW YORK — MEGHEN E. MORRISON — 074194 — LICENSED PROFESSIONAL ENGINEER

LRC Engineering & Surveying
- Civil Engineering
- Land Surveying
- Landscape Architecture
- Land Planning
- Laser Scanning & BIM
- Subsurface Utility Engineering

Land Resource Consultants Engineering & Surveying, LLC
D.B.A. Loureiro NY, P.C.
85 Civic Center Plaza, Suite 204
Poughkeepsie NY 12601
Tel: 845.243.2880
160 West Street, Suite E
Cromwell, CT 06416
Tel: 860.635.2877
www.lrcconsult.com

WATER / SANITARY DETAILS

WATER STREET DEVELOPMENT

141 NORTH WATER STREET
CITY OF POUGHKEEPSIE, DUTCHESS COUNTY, NEW YORK

Design/Calcs	BLS	CADD File	22298503-UTILITY.dwg	Sheet No.
Drawn	SMC	Project No.	22-2985	DN-3
Checked	KFC	Date	2025-07-22	SHEET 13 OF 18
Approved	LRC	Scale	AS NOTED	

X:\JOBS\Jobs 2022\22-2985-141 North Water Street Pok-Sunrise Developers Corp\DWG\DN22298503-UTILITY.dwg 12/1/2025 11:08 AM SDurrah

NOTES:

1. PRECAST CONCRETE CATCH BASIN SECTIONS AS MANUFACTURED BY FORT MILLER OR APPROVED EQUAL.
2. CATCH BASIN SHALL BE PRECAST CONCRETE. DESIGNED FOR H20 VEHICULAR LOADING AND 25% IMPACT.
3. FRAME AND COVER SHALL BE DESIGNED FOR H20 VEHICULAR LOADING AND 25% IMPACT. FRAME TO BE GENERAL FOUNDRIES, INC. MODEL #23408 OR APPROVED EQUAL.
4. CONCRETE CATCH BASIN CASTING CLEAR OPENING DIMENSION MUST MATCH FRAME AND GRATE CLEAR OPENING DIMENSION.
5. CATCH BASINS HAVING A DEPTH GREATER THAN 48" FROM FINISHED SURFACE TO THE TOP OF THE CONCRETE BASE SHALL BE PROVIDED WITH STEPS.
6. BACKFILL USING TRENCH BACKFILL, COMPACTED IN 6" LIFTS.
7. SUMPS FOR CATCH BASINS SHALL BE 24".

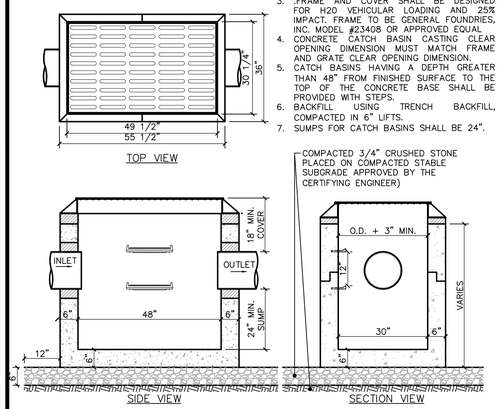

1 CURB LESS TYPE CATCH BASIN DETAIL
SCALE: 1/2" = 1'-0"

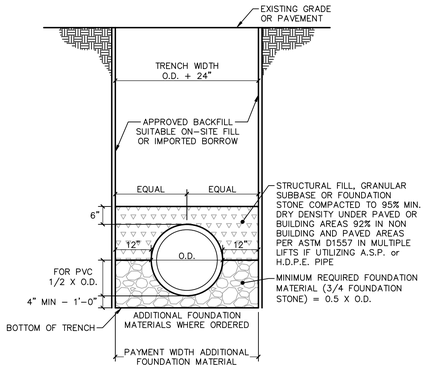

2 TYPICAL STORM SEWER TRENCH SECTION
SCALE: 1/2" = 1'-0"

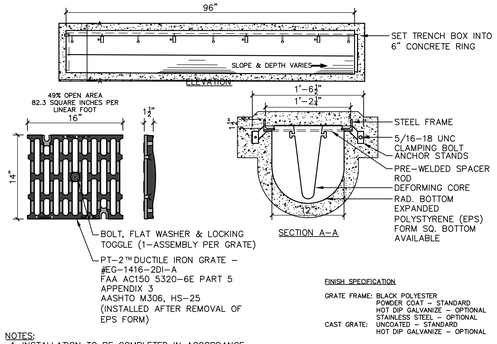

NOTES:
1. INSTALLATION TO BE COMPLETED IN ACCORDANCE WITH MANUFACTURER'S SPECIFICATIONS AND INSTALLATION INSTRUCTIONS.

4 ECONODRAIN SERIES #12 DETAIL
SCALE: 1" = 1'-0"

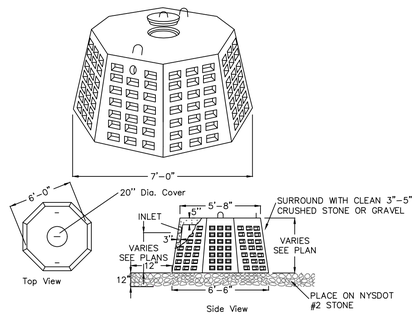

SPECIFICATIONS	PRECAST DRY WELLS MODEL
Concrete Minimum Strength: 4,000 psi at 28 days Reinforcement: #3 Rebar Air Entrainment: 5% Capacity: AS NOTED Weight = 3600 lbs Sidewall Area: 60 square feet Load Rating: 300 psf (H20 loading on request)	Woodard's Concrete Products, Inc. 629 Lyhott Road, Dalville, NY 12065 (845) 381-3471 / Fax 381-1050

5 PRECAST DRYWELL DETAIL
NOT TO SCALE
(DETAIL PROVIDED BY WOODARDS)

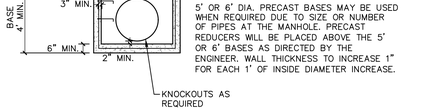

6 STORM DRAINAGE MANHOLE DETAIL
SCALE: 1/4" = 1'-0"

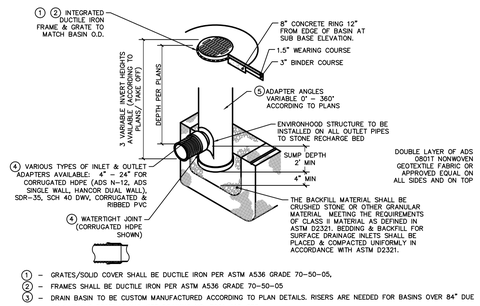

1 - GRATES/SOLID COVER SHALL BE DUCTILE IRON PER ASTM A536 GRADE 70-50-05.
2 - FRAMES SHALL BE DUCTILE IRON PER ASTM A536 GRADE 70-50-05
3 - DRAIN BASIN TO BE CUSTOM MANUFACTURED ACCORDING TO PLAN DETAILS. RISERS ARE NEEDED FOR BASINS OVER 84" DUE TO SHIPPING RESTRICTIONS. SEE DRAWING NO. 7001-110-065
4 - DRAINAGE CONNECTION STUB JOINT TIGHTNESS SHALL CONFORM TO ASTM D3212 FOR CORRUGATED HDPE (ADS & HANCOR DUAL WALL) & SDR 35 PVC
5 - ADAPTERS CAN BE MOUNTED ON ANY ANGLE 0° TO 360°. TO DETERMINE MINIMUM ANGLE BETWEEN ADAPTERS SEE DRAWING NO. 7001-110-013.

THIS PRINT DISCLOSES SUBJECT MATTER IN WHICH NYLOPLAST HAS PROPRIETARY RIGHTS. THE RECEIPT OR POSSESSION OF THIS PRINT DOES NOT CONFER, TRANSFER, OR LICENSE THE USE OF THE DESIGN OR TECHNICAL INFORMATION SHOWN HEREIN REPRODUCTION OF THIS PRINT OR ANY INFORMATION CONTAINED HEREIN, OR MANUFACTURE OF ANY ARTICLE HEREFROM, FOR THE DISCLOSURE TO OTHERS IS FORBIDDEN, EXCEPT BY SPECIFIC WRITTEN PERMISSION FROM NYLOPLAST.	DRAWN BY EBC DATE 4-3-06 APPD BY CJA DATE 4-3-06 DWG SIZE A	Nyloplast 3130 VERONA AVE BUFORD, GA 30518 PHN (770) 932-2443 FAX (770) 932-2490 www.nyloplast-us.com TITLE 24 IN DRAIN BASIN QUICK SPEC INSTALLATION DETAIL DWG NO. 7001-110-192 REV B	

NOTE:
1. SEE NOTES SHEET NS-1 FOR SUBGRADE AND BACKFILL COMPACTION REQUIREMENTS

7 NYLOPLAST 24" DRAIN BASIN DETAIL
SCALE: NTS

NOTES:
1. INVERT SHALL BE FILLETED.
2. REINFORCEMENT FOR MANHOLE AND SLAB TOP SHALL BE DESIGNED BY A LICENSED NEW YORK STATE PROFESSIONAL ENGINEER PRIOR TO CONSTRUCTION. SHOP DRAWINGS SHALL BE SUBMITTED FOR REVIEW. STRUCTURE SHALL BE DESIGNED FOR HS20-44 VEHICULAR LOADING PLUS 25% IMPACT.
3. CONCRETE TO TEST 4000 P.S.I. AT 28 DAYS IN CONFORMANCE WITH A.S.T.M. C-478.

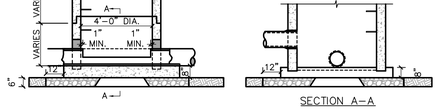

9 DOGHOUSE STORM MANHOLE DETAIL
SCALE: 1/4"=1'-0"



Revisions		
1	2025-09-09	SITE PLAN FOR ZBA SUBMISSION
2	2025-09-30	CITY PLANNING BOARD SUBMISSION
3	2025-12-03	CITY PLANNING BOARD SUBMISSION

LRC Engineering & Surveying
- Civil Engineering
- Land Surveying
- Landscape Architecture
- Land Planning
- Laser Scanning & BIM
- Subsurface Utility Engineering

Land Resource Consultants Engineering & Surveying, LLC
D.B.A. Lourenzo NY, P.C.
85 Civic Center Plaza, Suite 204
Poughkeepsie NY 12601
Tel: 845.243.2880
160 West Street, Suite E
Cromwell, CT 06416
Tel: 860.635.2877
www.lrcconsult.com

STORMWATER DETAILS

WATER STREET DEVELOPMENT

141 NORTH WATER STREET
CITY OF POUGHKEEPSIE, DUTCHESS COUNTY, NEW YORK

Design/Calcs	BLS	CADD File	2298504-STORM.dwg	Sheet No. DN-4
Drawn	SMC	Project No.	22-2985	
Checked	KFC	Date	2025-07-22	
Approved	LRC	Scale	AS NOTED	SHEET 14 OF 18

K:\JOBS\Jobs 2022\22-2985-141 North Water Street Pdk-Sunrise Developers Corp\DWG\DN2298504-STORM.dwg 12/1/2025 11:08 AM SCurran

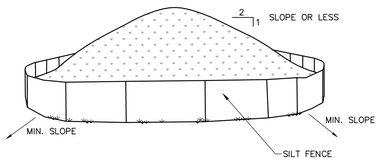

NOTES:
1. AREA CHOSEN FOR STOCKPILING OPERATIONS SHALL BE DRY AND STABLE.
2. MAXIMUM SLOPE OF STOCKPILE SHALL BE 1V:2H.
3. UPON COMPLETION OF SOIL STOCKPILING, EACH PILE SHALL BE SURROUNDED WITH SILT FENCING, THEN STABILIZED WITH VEGETATION OR COVERED.
4. SEE SPECIFICATIONS FOR INSTALLATION OF SILT FENCE.
5. HAYBALES OR SILT SOCKS TO BE USED WHERE STOCKPILES ARE LOCATED ON PAVED AREAS.

1 MATERIALS STOCKPILE DETAIL
SCALE: N.T.S.

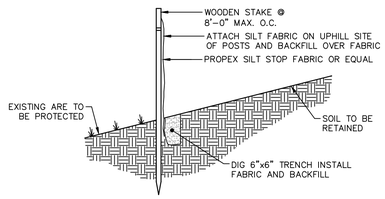

NOTE: FOR SLOPES > 5:1; PERPENDICULAR WINGS PLACED EVERY 100'
FOR SLOPES > 3:1 TO 5:1; PERPENDICULAR WINGS PLACED EVERY 75'
FOR SLOPES > 2:1 TO 3:1; PERPENDICULAR WINGS PLACED EVERY 50'

2 SILT FENCE DETAIL
SCALE: N.T.S.

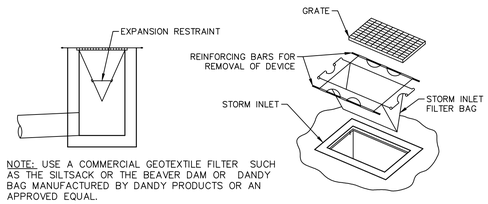

NOTE: USE A COMMERCIAL GEOTEXTILE FILTER SUCH AS THE SILTSACK OR THE BEAVER DAM OR DANDY BAG MANUFACTURED BY DANDY PRODUCTS OR AN APPROVED EQUAL.

3 SILT SACK DETAIL
SCALE: N.T.S.

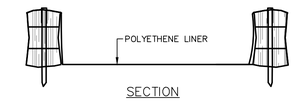

SECTION

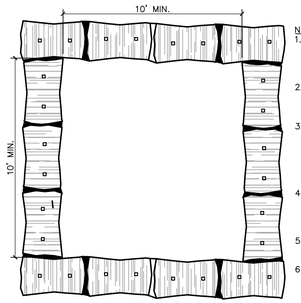

PLAN

NOTES:
1. CONCRETE WASHOUT SIGN TO BE INSTALLED WITHIN 30 FEET OF THE TEMPORARY CONCRETE WASHOUT FACILITY.
2. REMOVE HARDENED CONCRETE WHEN WITHIN 4" FROM TOP OF STRUCTURE.
3. CONSTRUCT NEW FACILITIES ONCE CURRENT FACILITIES ARE TWO-THIRDS FULL. IF CONCRETE HAS NOT HARDENED CONSTRUCT NEW FACILITIES ONCE CURRENT FACILITY IS TWO-THIRDS FULL.
4. LINERS, HAYBALES, ET.C SHALL BE INSPECTED FOR DAMAGE. ANY DAMAGE SHALL BE REPAIRED PROMPTLY.
5. SEPARATE FACILITIES TO BE USED FOR VEHICLE WASHING IF NEEDED.
6. NO CONCRETE IS TO BE WASHOUT OUT ON THE GROUND IN ANY LOCATION.

4 ABOVE GROUND TEMPORARY CONCRETE WASHOUT DETAIL
SCALE: 1/4"=1'-0"

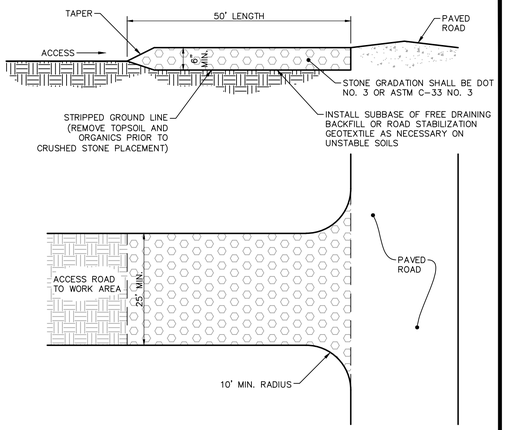

5 CONSTRUCTION ENTRANCE DETAIL
SCALE: 1/16" = 1'-0"

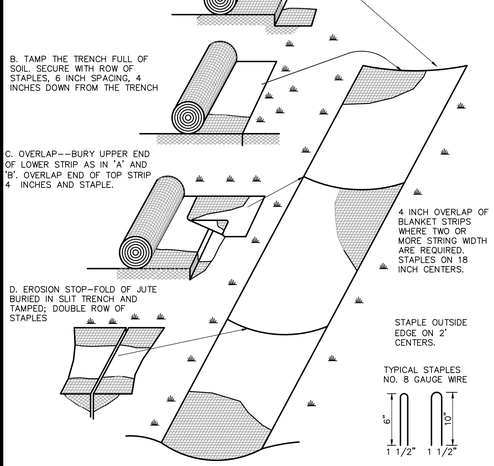

NOTES:

1. BLANKET IS TO BE INSTALLED ON ANY FINISHED SLOPES THAT ARE 4:1 OR GREATER.
2. 4:1 SLOPES OR STEEPER WHERE INDICATED ON THE CONTRACT DRAWINGS:

EROSION CONTROL BLANKET SHALL BE NORTH AMERICAN GREEN SC 150 OR SHALL BE A GREEN, WOOD FIBER MAT CONSTRUCTED FROM 100% ASPEN CURLED FIBERS WITH A GREEN PHOTO-DEGRADABLE NETTING APPLIED TO ONE SIDE. EROSION CONTROL BLANKET TO BE AS MANUFACTURED BY AMERICAN EXCELSIOR COMPANY, ARLINGTON, TX, "QUICK GRASS" OR APPROVED EQUAL.

6 EROSION CONTROL BLANKET DETAIL
SCALE: N.T.S.

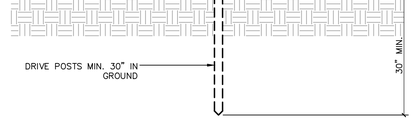

PLAN



SECTIONAL ELEVATION

7 ORANGE CONSTRUCTION FENCE DETAIL
SCALE: 1/2" = 1'-0"

X:\JOBS\Jobs 2021\22-2985-141 North Water Street Pkg-Sunrise Developers Corp\DWG\DN22298505-E&S.dwg 12/1/2025 11:08 AM Scurron

STATE OF NEW YORK
RODNEY E. MORRISON
LICENSED PROFESSIONAL ENGINEER
074154

Revisions		
1.	2025-09-09	SITE PLAN FOR ZBA SUBMISSION
2.	2025-09-30	CITY PLANNING BOARD SUBMISSION
3.	2025-12-03	CITY PLANNING BOARD SUBMISSION

LRC Engineering & Surveying
- Civil Engineering
- Land Surveying
- Landscape Architecture
- Land Planning
- Laser Scanning & BIM
- Subsurface Utility Engineering

Land Resource Consultants Engineering & Surveying, LLC
D.B.A. Loureiro NY, P.C.
85 Civic Center Plaza, Suite 204
Poughkeepsie NY 12601
Tel: 845.243.2880
160 West Street, Suite E
Cromwell, CT 06416
Tel: 860.635.2877
www.lrceonsult.com

EROSION CONTROL DETAILS

WATER STREET DEVELOPMENT

141 NORTH WATER STREET
CITY OF POUGHKEEPSIE, DUTCHESS COUNTY, NEW YORK

Design/Calcs	BLS	CAD File	N22298505-E&S.dwg	Sheet No. DN-5
Drawn	SMC	Project No.	22-2985	
Checked	KFC	Date	2025-07-22	
Approved	LRC	Scale	AS NOTED	SHEET 15 OF 18

Advanced Drainage Systems, Inc.

SiteAssist®
FOR STORMTECH
INSTALLATION INSTRUCTIONS
VISIT OUR WEBSITE

SC-800 STORMTECH CHAMBER SPECIFICATIONS

1. CHAMBERS SHALL BE STORMTECH SC-800.
2. CHAMBERS SHALL BE ARCH-SHAPED AND SHALL BE MANUFACTURED FROM VIRGIN, IMPACT-MODIFIED POLYPROPYLENE COPOLYMERS.
3. CHAMBERS SHALL MEET THE REQUIREMENTS OF ASTM F2418, "STANDARD SPECIFICATION FOR POLYPROPYLENE (PP) CORRUGATED WALL STORMWATER COLLECTION CHAMBERS".
4. CHAMBER ROWS SHALL PROVIDE CONTINUOUS, UNOBSTRUCTED INTERNAL SPACE WITH NO INTERNAL SUPPORTS THAT WOULD IMPEDE FLOW OR LIMIT ACCESS FOR INSPECTION.
5. THE STRUCTURAL DESIGN OF THE CHAMBERS, THE STRUCTURAL BACKFILL AND THE INSTALLATION REQUIREMENTS SHALL ENSURE THAT THE LOAD FACTORS SPECIFIED IN THE AASHTO LRFD BRIDGE DESIGN SPECIFICATIONS, SECTION 12.12, ARE MET FOR: 1) LONG-DURATION DEAD LOADS AND 2) SHORT-DURATION LIVE LOADS, BASED ON THE AASHTO DESIGN TRUCK WITH CONSIDERATION FOR IMPACT AND MULTIPLE VEHICLE PRESENCES.
6. CHAMBERS SHALL BE DESIGNED AND ALLOWABLE LOAD CONFIGURATIONS DETERMINED IN ACCORDANCE WITH ASTM F2787, "STANDARD PRACTICE FOR STRUCTURAL DESIGN OF THERMOPLASTIC CORRUGATED WALL STORMWATER COLLECTION CHAMBERS". LOAD CONFIGURATIONS SHALL INCLUDE: 1) INSTANTANEOUS (<1 MIN) AASHTO DESIGN TRUCK LIVE LOAD ON MINIMUM COVER 2) MAXIMUM PERMANENT (75-YR) COVER LOAD AND 3) ALLOWABLE COVER WITH PARKED (1-WEEK) AASHTO DESIGN TRUCK.
7. REQUIREMENTS FOR HANDLING AND INSTALLATION:
   - TO MAINTAIN THE WIDTH OF CHAMBERS DURING SHIPPING AND HANDLING, CHAMBERS SHALL HAVE INTEGRAL, INTERLOCKING STACKING LUGS.
   - TO ENSURE A SECURE JOINT DURING INSTALLATION AND BACKFILL, THE HEIGHT OF THE CHAMBER JOINT SHALL NOT BE LESS THAN 2".
   - TO ENSURE THE INTEGRITY OF THE ARCH SHAPE DURING INSTALLATION, a) THE ARCH STIFFNESS CONSTANT SHALL BE GREATER THAN OR EQUAL TO 750 LBS/FT/%. THE ASC IS DEFINED IN SECTION 6.2.8 OF ASTM F2418. AND b) TO RESIST CHAMBER DEFORMATION DURING INSTALLATION AT ELEVATED TEMPERATURES (ABOVE 73° F / 23° C), CHAMBERS SHALL BE PRODUCED FROM REFLECTIVE GOLD OR YELLOW COLORS.
8. ONLY CHAMBERS THAT ARE APPROVED BY THE SITE DESIGN ENGINEER WILL BE ALLOWED. UPON REQUEST BY THE SITE DESIGN ENGINEER OR OWNER, THE CHAMBER MANUFACTURER SHALL SUBMIT A STRUCTURAL EVALUATION FOR APPROVAL BEFORE DELIVERING CHAMBERS TO THE PROJECT SITE AS FOLLOWS:
   - THE STRUCTURAL EVALUATION SHALL BE SEALED BY A REGISTERED PROFESSIONAL ENGINEER.
   - THE STRUCTURAL EVALUATION SHALL DEMONSTRATE THAT THE SAFETY FACTORS ARE GREATER THAN OR EQUAL TO 1.95 FOR DEAD LOAD AND 1.75 FOR LIVE LOAD, THE MINIMUM REQUIRED BY ASTM F2787 AND BY SECTIONS 3 AND 12.12 OF THE AASHTO LRFD BRIDGE DESIGN SPECIFICATIONS FOR THERMOPLASTIC PIPE.
   - THE TEST DERIVED CREEP MODULUS AS SPECIFIED IN ASTM F2418 SHALL BE USED FOR PERMANENT DEAD LOAD DESIGN EXCEPT THAT IT SHALL BE THE 75-YEAR MODULUS USED FOR DESIGN.
9. CHAMBERS AND END CAPS SHALL BE PRODUCED AT AN ISO 9001 CERTIFIED MANUFACTURING FACILITY.
10. MANIFOLD SIZE TO BE DETERMINED BY SITE DESIGN ENGINEER. SEE TECHNICAL NOTE 6.32 FOR MANIFOLD SIZING GUIDANCE. DUE TO THE ADAPTATION OF THIS CHAMBER SYSTEM TO SPECIFIC SITE AND DESIGN CONSTRAINTS, IT MAY BE NECESSARY TO CUT AND COUPLE ADDITIONAL PIPE TO STANDARD MANIFOLD COMPONENTS IN THE FIELD.
11. ADS DOES NOT DESIGN OR PROVIDE MEMBRANE LINER SYSTEMS. TO MINIMIZE THE LEAKAGE POTENTIAL OF LINER SYSTEMS, THE MEMBRANE LINER SYSTEM SHOULD BE DESIGNED BY A KNOWLEDGEABLE GEOTEXTILE PROFESSIONAL AND INSTALLED BY A QUALIFIED CONTRACTOR.

IMPORTANT - NOTES FOR THE BIDDING AND INSTALLATION OF THE SC-800 SYSTEM

1. STORMTECH SC-800 CHAMBERS SHALL NOT BE INSTALLED UNTIL THE MANUFACTURER'S REPRESENTATIVE HAS COMPLETED A PRE-CONSTRUCTION MEETING WITH THE INSTALLERS.
2. STORMTECH SC-800 CHAMBERS SHALL BE INSTALLED IN ACCORDANCE WITH THE "STORMTECH SC-310/SC-740/SC-800/DC-780 CONSTRUCTION GUIDE".
3. CHAMBERS ARE NOT TO BE BACKFILLED WITH A DOZER OR AN EXCAVATOR SITUATED OVER THE CHAMBERS. STORMTECH RECOMMENDS 3 BACKFILL METHODS:
   - STONESHOOTER LOCATED OFF THE CHAMBER BED.
   - BACKFILL AS ROWS ARE BUILT USING AN EXCAVATOR ON THE FOUNDATION STONE OR SUBGRADE.
   - BACKFILL FROM OUTSIDE THE EXCAVATION USING A LONG BOOM HOE OR EXCAVATOR.
4. THE FOUNDATION STONE SHALL BE LEVELED AND COMPACTED PRIOR TO PLACING CHAMBERS.
5. JOINTS BETWEEN CHAMBERS SHALL BE PROPERLY SEATED PRIOR TO PLACING STONE.
6. MAINTAIN MINIMUM - 3" (75 mm) SPACING BETWEEN THE CHAMBER ROWS.
7. EMBEDMENT STONE SURROUNDING CHAMBERS MUST BE A CLEAN, CRUSHED, ANGULAR STONE OR RECYCLED CONCRETE; AASHTO M43 #3, 357, 4, 467, 5, 56, OR 57.
8. THE CONTRACTOR MUST REPORT ANY DISCREPANCIES WITH CHAMBER FOUNDATION MATERIALS BEARING CAPACITIES TO THE SITE DESIGN ENGINEER.
9. ADS RECOMMENDS THE USE OF "FLEXSTORM CATCH IT" INSERTS DURING CONSTRUCTION FOR ALL INLETS TO PROTECT THE SUBSURFACE STORMWATER MANAGEMENT SYSTEM FROM CONSTRUCTION SITE RUNOFF.

NOTES FOR CONSTRUCTION EQUIPMENT

1. STORMTECH SC-800 CHAMBERS SHALL BE INSTALLED IN ACCORDANCE WITH THE "STORMTECH SC-310/SC-740/SC-800/DC-780 CONSTRUCTION GUIDE".
2. THE USE OF CONSTRUCTION EQUIPMENT OVER SC-800 CHAMBERS IS LIMITED:
   - NO EQUIPMENT IS ALLOWED ON BARE CHAMBERS.
   - NO RUBBER TIRED LOADERS, DUMP TRUCKS, OR EXCAVATORS ARE ALLOWED UNTIL PROPER FILL DEPTHS ARE REACHED IN ACCORDANCE WITH THE "STORMTECH SC-310/SC-740/SC-800/DC-780 CONSTRUCTION GUIDE".
   - WEIGHT LIMITS FOR CONSTRUCTION EQUIPMENT CAN BE FOUND IN THE "STORMTECH SC-310/SC-740/SC-800/DC-780 CONSTRUCTION GUIDE".
3. FULL 36" (900 mm) OF STABILIZED COVER MATERIALS OVER THE CHAMBERS IS REQUIRED FOR DUMP TRUCK TRAVEL OR DUMPING.

USE OF A DOZER TO PUSH EMBEDMENT STONE BETWEEN THE ROWS OF CHAMBERS MAY CAUSE DAMAGE TO THE CHAMBERS AND IS NOT AN ACCEPTABLE BACKFILL METHOD. ANY CHAMBERS DAMAGED BY THE "DUMP AND PUSH" METHOD ARE NOT COVERED UNDER THE STORMTECH STANDARD WARRANTY.

CONTACT STORMTECH AT 1-800-821-6710 WITH ANY QUESTIONS ON INSTALLATION REQUIREMENTS OR WEIGHT LIMITS FOR CONSTRUCTION EQUIPMENT.

UNDERDRAIN DETAIL
NTS

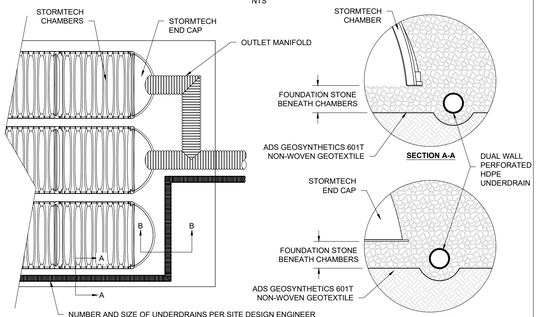

UNDERDRAIN DETAIL

INSERTA TEE DETAIL
NTS

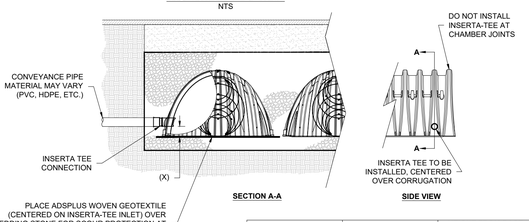

CHAMBER	MAX DIAMETER OF INSERTA TEE	HEIGHT FROM BASE OF CHAMBER (X)
SC-310	6" (150 mm)	4" (100 mm)
SC-740	10" (250 mm)	4" (100 mm)
SC-800	10" (250 mm)	4" (100 mm)
DC-780	10" (250 mm)	4" (100 mm)
MC-3500	12" (300 mm)	6" (150 mm)
MC-4500	12" (300 mm)	8" (200 mm)
MC-7200	12" (300 mm)	8" (200 mm)
INSERTA TEE FITTINGS AVAILABLE FOR SDR 26, SDR 35, SCH 40 IPS GASKETED & SOLVENT WELD, N-12, HP STORM, C-900 OR DUCTILE IRON		

NOTES:
- PART NUMBERS WILL VARY BASED ON INLET PIPE MATERIALS. CONTACT STORMTECH FOR MORE INFORMATION.
- CONTACT ADS ENGINEERING SERVICES IF INSERTA TEE INLET MUST BE RAISED AS NOT ALL INVERTS ARE POSSIBLE.

INSERTA-TEE SIDE INLET DETAIL

SC-800 TECHNICAL SPECIFICATION
NTS

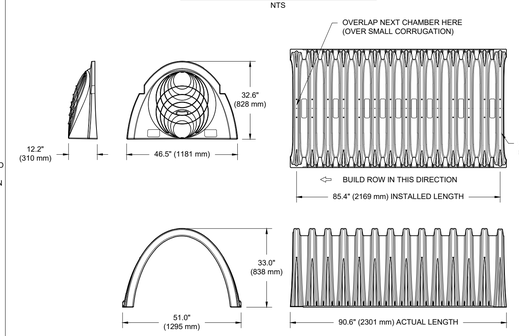

NOMINAL CHAMBER SPECIFICATIONS

SIZE (W X H X INSTALLED LENGTH)	51.0" X 33.0" X 85.4"	(1295 mm X 838 mm X 2169 mm)
CHAMBER STORAGE	50.6 CUBIC FEET	(1.43 m³)
MINIMUM INSTALLED STORAGE*	78.4 CUBIC FEET	(2.22 m³)
WEIGHT	81.8 lbs.	(37.1 kg)

NOMINAL END CAP SPECIFICATIONS

SIZE (W X H X INSTALLED LENGTH)	46.5" X 32.6" X 10.5"	(1181 mm X 828 mm X 267 mm)
END CAP STORAGE	3.4 CUBIC FEET	(0.09 m³)
MINIMUM INSTALLED STORAGE**	14.7 CUBIC FEET	(0.42 m³)
WEIGHT	15.7 lbs.	(7.1 kg)

* ASSUMES 6" (150 mm) STONE ABOVE AND BELOW CHAMBER, 3" (75 mm) BETWEEN CHAMBERS
**ASSUMES 6" (150 mm) STONE ABOVE AND BELOW END CAPS, 3" (75 mm) BETWEEN ROWS, 12" (300 mm) BEYOND END CAPS

PRE-CORED HOLES AT BOTTOM OF END CAP FOR PART NUMBERS ENDING WITH "BPC"
PRE-CORED HOLES AT TOP OF END CAP FOR PART NUMBERS ENDING WITH "TPC"

PART #	STUB	B	C
SC800EPE06TPC	6" (150 mm)	21.4" (544 mm)	
SC800EPE06BPC		---	0.9" (23 mm)
SC800EPE08TPC	8" (200 mm)	19.2" (488 mm)	---
SC800EPE08BPC		---	1.0" (25 mm)
SC800EPE10TPC	10" (250 mm)	17.0" (432 mm)	---
SC800EPE10BPC		---	1.2" (30 mm)
SC800EPE12TPC	12" (300 mm)	14.4" (366 mm)	---
SC800EPE12BPC		---	1.6" (41 mm)
SC800EPE15TPC	15" (375 mm)	11.3" (287 mm)	---
SC800EPE15BPC		---	1.7" (43 mm)
SC800EPE18TPC	18" (450 mm)	8.0" (203 mm)	---
SC800EPE18BPC		---	2.0" (51 mm)
SC800ECEZ	24" (600 mm)	---	2.3" (58 mm)

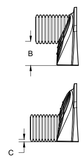

NOTE: ALL DIMENSIONS ARE NOMINAL

SC-800 TECHNICAL SPECIFICATIONS

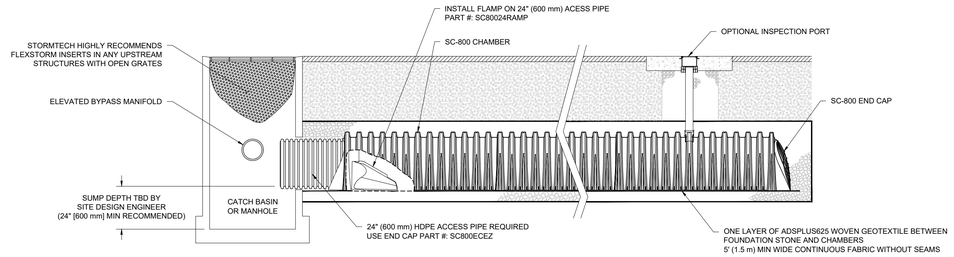

SC-800 ISOLATOR ROW PLUS DETAIL
NTS

SC-800 ISOLATOR ROW PLUS DETAIL

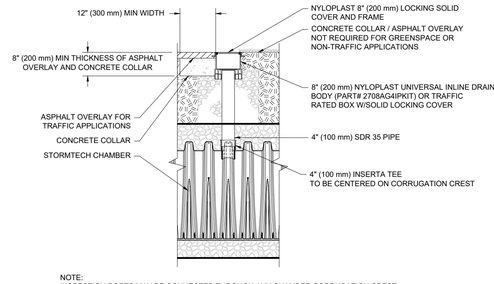

NOTE:
INSPECTION PORTS MAY BE CONNECTED THROUGH ANY CHAMBER CORRUGATION CREST.

4" PVC INSPECTION PORT DETAIL (SC SERIES CHAMBER)
NTS

INSPECTION & MAINTENANCE

STEP 1) INSPECT ISOLATOR ROW PLUS FOR SEDIMENT
- A. INSPECTION PORTS (IF PRESENT)
  - A.1. REMOVE/OPEN LID ON NYLOPLAST INLINE DRAIN
  - A.2. REMOVE AND CLEAN FLEXSTORM FILTER IF INSTALLED
  - A.3. USING A FLASHLIGHT AND STADIA ROD, MEASURE DEPTH OF SEDIMENT AND RECORD ON MAINTENANCE LOG
  - A.4. LOWER A CAMERA INTO ISOLATOR ROW PLUS FOR VISUAL INSPECTION OF SEDIMENT LEVELS (OPTIONAL)
  - A.5. IF SEDIMENT IS AT, OR ABOVE, 3" (80 mm) PROCEED TO STEP 2. IF NOT, PROCEED TO STEP 3.
- B. ALL ISOLATOR PLUS ROWS
  - B.1. REMOVE COVER FROM STRUCTURE AT UPSTREAM END OF ISOLATOR ROW PLUS
  - B.2. USING A FLASHLIGHT, INSPECT DOWN THE ISOLATOR ROW PLUS THROUGH OUTLET PIPE
    - i) MIRRORS ON POLES OR CAMERAS MAY BE USED TO AVOID A CONFINED SPACE ENTRY
    - ii) FOLLOW OSHA REGULATIONS FOR CONFINED SPACE ENTRY IF ENTERING MANHOLE
  - B.3. IF SEDIMENT IS AT, OR ABOVE, 3" (80 mm) PROCEED TO STEP 2. IF NOT, PROCEED TO STEP 3.

STEP 2) CLEAN OUT ISOLATOR ROW PLUS USING THE JETVAC PROCESS
- A. A FIXED CULVERT CLEANING NOZZLE WITH REAR FACING SPREAD OF 45° (1.1 m) OR MORE IS PREFERRED
- B. APPLY MULTIPLE PASSES OF JETVAC UNTIL BACKFLUSH WATER IS CLEAN
- C. VACUUM STRUCTURE SUMP AS REQUIRED

STEP 3) REPLACE ALL COVERS, GRATES, FILTERS, AND LIDS; RECORD OBSERVATIONS AND ACTIONS.

STEP 4) INSPECT AND CLEAN BASINS AND MANHOLES UPSTREAM OF THE STORMTECH SYSTEM.

NOTES

1. INSPECT EVERY 6 MONTHS DURING THE FIRST YEAR OF OPERATION. ADJUST THE INSPECTION INTERVAL BASED ON PREVIOUS OBSERVATIONS OF SEDIMENT ACCUMULATION AND HIGH WATER ELEVATIONS.
2. CONDUCT JETTING AND VACTORING ANNUALLY OR WHEN INSPECTION SHOWS THAT MAINTENANCE IS NECESSARY.

4" PVC INSPECTION PORT DETAIL (SC SERIES CHAMBER)

ACCEPTABLE FILL MATERIALS: STORMTECH SC-800 CHAMBER SYSTEMS

	MATERIAL LOCATION	DESCRIPTION	AASHTO MATERIAL CLASSIFICATIONS	COMPACTION / DENSITY REQUIREMENT
D	**FINAL FILL:** FILL MATERIAL FOR LAYER 'D' STARTS FROM THE TOP OF THE 'C' LAYER TO THE BOTTOM OF FLEXIBLE PAVEMENT OR UNPAVED FINISHED GRADE ABOVE. NOTE THAT PAVEMENT SUBBASE MAY BE PART OF THE 'D' LAYER.	ANY SOIL/ROCK MATERIALS, NATIVE SOILS, OR PER ENGINEER'S PLANS. CHECK PLANS FOR PAVEMENT SUBGRADE REQUIREMENTS.	N/A	PREPARE PER SITE DESIGN ENGINEER'S PLANS. PAVED INSTALLATIONS MAY HAVE STRINGENT MATERIAL AND PREPARATION REQUIREMENTS.
C	**INITIAL FILL:** FILL MATERIAL FOR LAYER 'C' STARTS FROM THE TOP OF THE EMBEDMENT STONE ('B' LAYER) TO 15" (375 mm) ABOVE THE TOP OF THE CHAMBER. NOTE THAT PAVEMENT SUBBASE MAY BE A PART OF THE 'C' LAYER.	GRANULAR WELL-GRADED SOIL/AGGREGATE MIXTURES, <35% FINES OR PROCESSED AGGREGATE. MOST PAVEMENT SUBBASE MATERIALS CAN BE USED IN LIEU OF THIS LAYER.	AASHTO M145[1] A-1, A-2-4, A-3 OR AASHTO M43[1] 3, 357, 4, 467, 5, 56, 57, 6, 67, 68, 7, 78, 8, 89, 9, 10	BEGIN COMPACTIONS AFTER 12" (300 mm) OF MATERIAL OVER THE CHAMBERS IS REACHED. COMPACT ADDITIONAL LAYERS IN 6" (150 mm) MAX LIFTS TO A MIN. 95% PROCTOR DENSITY FOR WELL GRADED MATERIAL AND 95% RELATIVE DENSITY FOR PROCESSED AGGREGATE MATERIALS. ROLLER GROSS VEHICLE WEIGHT NOT TO EXCEED 12,000 lbs (53 kN). DYNAMIC FORCE NOT TO EXCEED 20,000 lbs (89 kN).
B	**EMBEDMENT STONE:** FILL SURROUNDING THE CHAMBERS FROM THE FOUNDATION STONE ('A' LAYER) TO THE 'C' LAYER ABOVE.	CLEAN, CRUSHED, ANGULAR STONE OR RECYCLED CONCRETE[3]	AASHTO M43[1] 3, 357, 4, 467, 5, 56, 57	NO COMPACTION REQUIRED.
A	**FOUNDATION STONE:** FILL BELOW CHAMBERS FROM THE SUBGRADE UP TO THE FOOT (BOTTOM) OF THE CHAMBER.	CLEAN, CRUSHED, ANGULAR STONE OR RECYCLED CONCRETE[3]	AASHTO M43[1] 3, 357, 4, 467, 5, 56, 57	PLATE COMPACT OR ROLL TO ACHIEVE A FLAT SURFACE[2,3]

PLEASE NOTE:
1. THE LISTED AASHTO DESIGNATIONS ARE FOR GRADATIONS ONLY. THE STONE MUST ALSO BE CLEAN, CRUSHED, ANGULAR. FOR EXAMPLE, A SPECIFICATION FOR #4 STONE WOULD STATE: "CLEAN, CRUSHED, ANGULAR NO. 4 (AASHTO M43) STONE".
2. STORMTECH COMPACTION REQUIREMENTS ARE MET FOR 'A' LOCATION MATERIALS WHEN PLACED AND COMPACTED IN 6" (150 mm) (MAX) LIFTS USING TWO FULL COVERAGES WITH A VIBRATORY COMPACTOR.
3. WHERE INFILTRATION SURFACES MAY BE COMPROMISED BY COMPACTION, FOR STANDARD DESIGN LOAD CONDITIONS, A FLAT SURFACE MAY BE ACHIEVED BY RAKING OR DRAGGING WITHOUT COMPACTION EQUIPMENT. FOR SPECIAL LOAD DESIGNS, CONTACT STORMTECH FOR COMPACTION REQUIREMENTS.
4. ONCE LAYER 'C' IS PLACED, ANY SOIL/MATERIAL CAN BE PLACED IN LAYER 'D' UP TO THE FINISHED GRADE. MOST PAVEMENT SUBBASE SOILS CAN BE USED TO REPLACE THE MATERIAL REQUIREMENTS OF LAYER 'C' OR 'D' AT THE SITE DESIGN ENGINEER'S DISCRETION.
5. WHERE RECYCLED CONCRETE AGGREGATE IS USED IN LAYERS 'A' OR 'B' THE MATERIAL SHOULD ALSO MEET THE ACCEPTABILITY CRITERIA OUTLINED IN TECHNICAL NOTE 6.20 "RECYCLED CONCRETE STRUCTURAL BACKFILL".

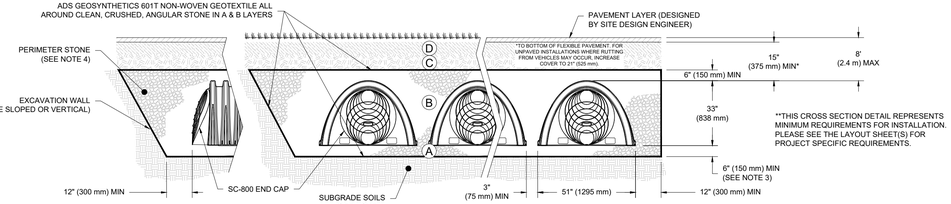

NOTES:

1. CHAMBERS SHALL MEET THE REQUIREMENTS OF ASTM F2418, "STANDARD SPECIFICATION FOR POLYPROPYLENE (PP) CORRUGATED WALL STORMWATER COLLECTION CHAMBERS".
2. SC-800 CHAMBERS SHALL BE DESIGNED IN ACCORDANCE WITH ASTM F2787 "STANDARD PRACTICE FOR STRUCTURAL DESIGN OF THERMOPLASTIC CORRUGATED WALL STORMWATER COLLECTION CHAMBERS".
3. THE SITE DESIGN ENGINEER IS RESPONSIBLE FOR ASSESSING THE BEARING RESISTANCE (ALLOWABLE BEARING CAPACITY) OF THE SUBGRADE SOILS AND THE DEPTH OF FOUNDATION STONE WITH CONSIDERATION FOR THE RANGE OF EXPECTED SOIL MOISTURE CONDITIONS. REFERENCE STORMTECH DESIGN MANUAL FOR BEARING CAPACITY GUIDANCE.
4. PERIMETER STONE MUST BE EXTENDED HORIZONTALLY TO THE EXCAVATION WALL FOR BOTH VERTICAL AND SLOPED EXCAVATION WALLS.
5. REQUIREMENTS FOR HANDLING AND INSTALLATION:
   - TO MAINTAIN THE WIDTH OF CHAMBERS DURING SHIPPING AND HANDLING, CHAMBERS SHALL HAVE INTEGRAL, INTERLOCKING STACKING LUGS.
   - TO ENSURE A SECURE JOINT DURING INSTALLATION AND BACKFILL, THE HEIGHT OF THE CHAMBER JOINT SHALL NOT BE LESS THAN 2" (50 mm).
   - TO ENSURE THE INTEGRITY OF THE ARCH SHAPE DURING INSTALLATION, a) THE ARCH STIFFNESS CONSTANT AS DEFINED IN SECTION 6.2.8 OF ASTM F2418 SHALL BE GREATER THAN OR EQUAL TO 750 LBS/FT/%. AND b) TO RESIST CHAMBER DEFORMATION DURING INSTALLATION AT ELEVATED TEMPERATURES (ABOVE 73° F / 23° C), CHAMBERS SHALL BE PRODUCED FROM REFLECTIVE GOLD OR YELLOW COLORS.

SC-800 CROSS SECTION DETAIL

DRAWN: SMW | DATE: 2025-07-22
REVIEWED: JLM | PROJECT NO: 22-2985
REV: | NOT TO SCALE

SC-800 STANDARD DETAILS

StormTech® Chamber System

4640 TRUEMAN BLVD
HILLIARD, OH 43026

Advanced Drainage Systems, Inc.

SHEET
DN-6
SHEET 16 OF 16

ADVANCED DRAINAGE SYSTEMS, INC. ("ADS") HAS PREPARED THIS DETAIL BASED ON REFERENCED STANDARDS. ADS HAS NOT PERFORMED ANY ENGINEERING OR DESIGN SERVICES FOR THIS PROJECT; NOR HAS ADS INDEPENDENTLY VERIFIED THE INFORMATION SUPPLIED. THE INSTALLATION DETAILS PROVIDED HEREIN ARE GENERAL RECOMMENDATIONS AND ARE NOT SPECIFIC FOR THIS PROJECT. UNLESS THE PLANS ARE SIGNED AND SEALED BY THE SITE DESIGN ENGINEER, THE SITE DESIGN ENGINEER SHALL REVIEW THESE DETAILS PRIOR TO CONSTRUCTION AND SEALING THE DOCUMENT. IT IS THE SITE DESIGN ENGINEER'S RESPONSIBILITY TO ENSURE THE DETAILS PROVIDED HEREIN MEET OR EXCEED THE APPLICABLE NATIONAL, STATE, OR LOCAL REQUIREMENTS AND TO ENSURE THAT THE DETAILS PROVIDED HEREIN ARE ACCEPTABLE FOR THIS PROJECT.

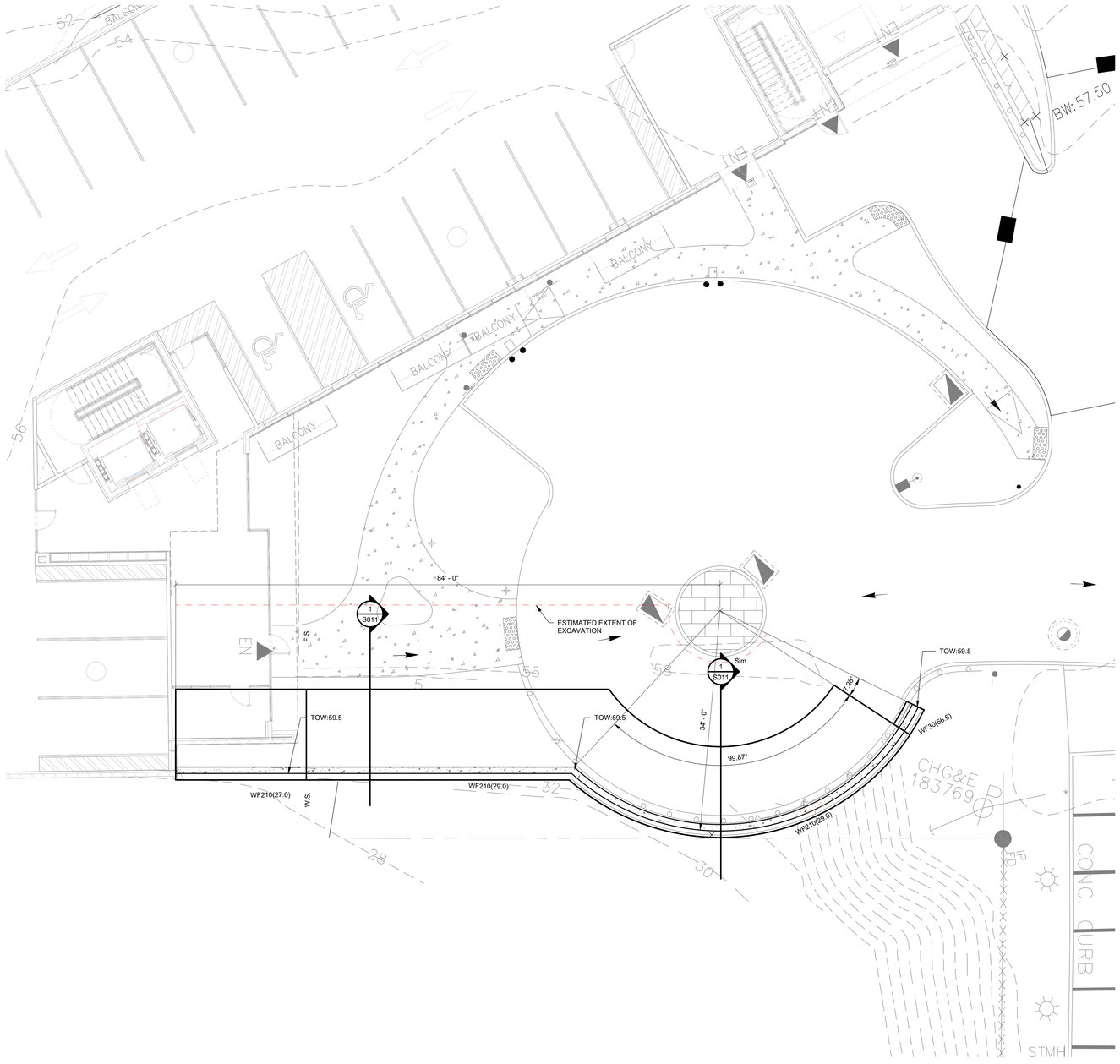

1 S010 PLAN - RETAINING WALL
1/8" = 1'-0"

FOOTING SCHEDULE					
TYPE	LENGTH	WIDTH	THICKNESS	TRANS. REINF.	LONG. REINF.
WF14	<varies>	14' - 0"	3'-0"	SEE SECTION	SEE SECTION
WF30	4' - 2 7/8"	3' - 0"	1'-0"	#4@18" O.C.	(4)-#4

CONCRETE:

1. CONCRETE SHALL CONFORM WITH THE REQUIREMENTS SET FORTH IN A.C.I. 301 AND SHALL HAVE A 28-DAY COMPRESSIVE STRENGTH AND DENSITY, IN ACCORDANCE WITH THE FOLLOWING:

INTENDED USE	28 DAY STRENGTH f'c (K S.I.)	CONCRETE DENSITY	MAXIMUM W/C (INCLUDING FLY ASH)	MINIMUM CEMENT MATERIAL (#/CY INCLUDING FLY ASH)	MAXIMUM AGGREGATE (IN.)	SLUMP LIMITS (IN.) (+0", -2")	TOTAL AIR LIMITS (0%) (B)	REQUIRED ADMIXTURES (C)
FOOTINGS	4	145	0.48	564	1 1/2	4	-	-
CONCRETE EXPOSED TO DEICERS	4	145	0.40	564	3/4	4	6	AE, WR
INTERIOR TOPPING SLABS	3.5	145	0.50	541	3/4	4	-	-
INTERIOR SLABS ON GRADE	4	145	0.50	564	1 1/2	4	N	-
ALL CONCRETE NOT OTHERWISE SPECIFIED	4	145	0.40	564	3/4	4	6	-

CONCRETE TABLE NOTES:

A. FOR MAXIMUM COARSE AGGREGATE SIZE INDICATED, USE THE FOLLOWING AGGREGATE SIZE NUMBERS PER A.S.T.M. C33:

3/8" - #8 AGGREGATE
3/4" - #67 AGGREGATE
1" - #57 AGGREGATE
1 1/2" - #467 AGGREGATE

B. TOTAL AIR CONTENT LIMITS INCLUDE BOTH ENTRAINED AND ENTRAPPED AIR +/- 1 1/2%. "N" IN COLUMN INDICATES ADDITION OF ENTRAINED AIR IS NOT PERMITTED.

C. ABBREVIATIONS FOR REQUIRED ADMIXTURES AS FOLLOWS: AE - AIR-ENTRAINING ADMIXTURE, WR - WATER REDUCING ADMIXTURE

D. MAXIMUM SHRINKAGE FOR SLAB ON GRADE SHALL BE LIMITED TO 5/8" PER 100 FOOT.

E. PRECAST WALL PANEL GROUT SHALL CONTAIN A MINIMUM OF ITS CEMENTITIOUS MATERIAL AS EITHER 15% TYPE "K" CEMENT OR 8% TYPE "G" CEMENT.

1. REINFORCING SHALL CONFORM TO A.S.T.M. A615, GR. 60, INCLUDING TIES AND STIRRUPS. BARS REQUIRING WELDING OR FIELD BENDING SHALL BE A.S.T.M. A706, GRADE 60.

2. WELDED WIRE FABRIC SHALL CONFORM TO A.S.T.M. A185.

3. LAP SPLICES SHALL BE IN ACCORDANCE WITH THE FOLLOWING TABLE, UNLESS NOTED OTHERWISE. WHERE CLASSES ARE NOT CALLED OUT ON DRAWINGS, USE CLASS "B" SPLICES:

SPLICES: f'c = 4000 P.S.I., fy = 60,000 P.S.I.

STANDARD TENSION LAP SPLICE, GRADE 60												
CLASS A and B LAP SPLICE LENGTH (INCHES)												
		f'c = 3,000 P.S.I.				f'c = 4,000 P.S.I.				f'c = 5,000 P.S.I.			
BAR SIZE	CLASS	A		B		A		B		A		B	
	CASE	1	2	1	2	1	2	1	2	1	2	1	2
#3		16	25	21	32	14	21	18	28	13	19	17	25
#4		22	33	28	43	19	28	25	37	17	25	22	33
#5		27	41	36	53	24	36	31	46	21	32	28	41
#6		33	49	43	64	28	43	37	55	25	38	33	50
#7		48	72	62	93	42	62	54	81	37	56	48	72
#8		55	82	71	107	47	71	62	92	42	64	55	83
#9		62	93	80	120	54	80	70	104	48	72	62	93
#10		70	104	90	136	60	90	78	117	54	81	70	105
#11		77	116	100	151	67	100	87	130	60	90	78	117

"TOP BARS" ARE DEFINED AS ANY BAR WITH MORE THAN 12" OF CONCRETE CAST BELOW THE BAR, SEE NOTE 4 IN TABLE NOTES.

COMPRESSION LAP SPLICE SCHEDULE	
LAP LENGTH (INCHES)	
f'c = 3,000 P.S.I. OR GREATER	
BAR SIZE	30 BAR DIA.
#3	12
#4	15
#5	19
#6	22
#7	26
#8	29
#9	33
#10	37
#11	41

TABLE NOTES:

A. TABLES ARE BASED A.C.I. 318. WHERE CLEAR SPACING OF BARS BEING DEVELOPED OR SPLICED IS AT LEAST 2 BAR DIAMETERS AND THE CLEAR COVER AT LEAST 1 BAR DIAMETER, USE CASE 1. USE CASE 2 FOR OTHER BAR ARRANGEMENTS.

B. ALL SPLICES TO BE CLASS "B" TENSION SPLICE UNLESS OTHERWISE NOTED.

C. SPLICE PLAIN WELDED WIRE FABRIC BY LAPPING ONE FULL MESH SPACE PLUS 2 INCHES.

D. FOR TOP BARS, MULTIPLY LENGTHS IN TABLE BY 1.3.

E. FOR EPOXY COATED REINFORCEMENT, MULTIPLY LENGTHS IN TABLE BY 1.5 FOR COVER LESS THAN 3db OR CLEAR SPACING LESS THAN 6db, MULTIPLY LENGTHS BY 1.2 FOR ALL OTHER EPOXY COATED REINFORCEMENT.

F. FOR LIGHT WEIGHT CONCRETE, MULTIPLY LENGTHS IN TABLE BY 1.3.

G. COMPRESSION DOWEL EMBEDMENT: 22 BAR DIAMETERS

H. COMPRESSION DOWEL EMBEDMENT: 22 BAR DIAMETERS.

CONCRETE NOTES (CONTINUED):

5. ALL REINFORCING SHALL BE DETAILED, FABRICATED AND PLACED, IN ACCORDANCE WITH THE LATEST EDITION OF THE A.C.I. DETAILING MANUAL.

6. ALL REINFORCING SHALL BE SUPPORTED IN FORMS, SPACED WITH NECESSARY ACCESSORIES AND SHALL BE SECURELY WIRED TOGETHER, IN ACCORDANCE WITH C.R.S.I. "REINFORCING BAR DETAILING", LATEST EDITION.

7. MINIMUM CONCRETE COVER, UNLESS NOTED OTHERWISE:

A. UNFORMED SURFACE IN CONTACT WITH THE GROUND: 3 IN.

B. FORMED SURFACES EXPOSED TO EARTH OR WEATHER: 1 1/2 IN. FOR #5 BAR OR SMALLER, 2 IN. FOR #6 BAR OR LARGER.

C. FORMED SURFACES NOT EXPOSED TO EARTH OR WEATHER: WALLS, SLABS: 3/4 IN., BEAMS, GIRDERS AND COLUMNS (TO TIES OR STIRRUPS): 1 1/2 IN.

8. ALL CONSTRUCTION JOINTS SHOWN ON DRAWINGS SHALL BE INCORPORATED INTO THE STRUCTURE, UNLESS THEIR ELIMINATION IS APPROVED BY THE ENGINEER. ADDITIONAL CONSTRUCTION JOINTS, REQUIRED TO FACILITATE CONSTRUCTION, SHALL BE LOCATED AT POINTS OF MINIMUM SHEAR AND SHALL BE DETAILED ON SHOP DRAWINGS WITH LOCATIONS SUBJECT TO APPROVAL BY ENGINEER. REINFORCEMENT SHALL PASS CONTINUOUSLY THROUGH THE JOINT.

9. ALL ABUTTING CONCRETE MEMBERS SHALL BE DOWELED TOGETHER, UNLESS POURED MONOLITHICALLY. DOWELS SHALL BE EQUAL IN SIZE AND SPACING TO THE REINFORCING IN THE ADJACENT MEMBER.

10. UNLESS OTHERWISE SHOWN IN THE ARCHITECTURAL DRAWINGS, PROVIDE 3/4" CHAMFERS AT ALL EDGES THAT ARE EXPOSED TO VIEW IN THE FINISHED STRUCTURE.

11. SEE ARCHITECTURAL DRAWINGS FOR DOOR AND WINDOW OPENINGS, DRIP SLOTS, REGLETS, MASONRY ANCHORS, PRECAST BEARING LEDGES, BRICK LEDGE ELEVATIONS AND FOR MISCELLANEOUS EMBEDDED PLATES, BOLTS, ANCHORS, ANGLES, ETC.

12. REFER TO ARCHITECTURAL DRAWINGS FOR CONCRETE FINISHES. WHERE FINISH IS NOT SPECIFIED, CONFORM TO REQUIREMENTS OF A.C.I. 301.

13. MECHANICAL, PLUMBING, AND ELECTRICAL DRAWINGS SHALL BE REFERRED TO FOR DRAINS, SLEEVES, OUTLET BOXES, CONDUIT, ANCHORS, ETC. THE VARIOUS TRADES ARE RESPONSIBLE FOR PLACING THEIR ITEMS.

14. REFER TO MECHANICAL DRAWINGS FOR HOUSEKEEPING PADS AND INERTIA BASES AT MECHANICAL EQUIPMENT.

15. PROVIDE CONCRETE EQUIPMENT PADS, INERTIA BASES AND CURBS AS NOTED ELSEWHERE IN CONTRACT DOCUMENTS. UNLESS NOTED, DOWEL PADS WITH HOOKED #4 x 0'-6" PROJECTING 3" FROM CONCRETE BELOW AT18"O.C. EACH WAY. REINFORCE PADS WITH #4@18 EACH WAY, TOP AND BOTTOM, UNLESS OTHERWISEREQUIRED BY EQUIPMENT ANCHORAGE DESIGN.

16. REFER TO MECHANICAL DRAWINGS FOR UNDERFLOOR AND PERIMETER FOUNDATION DRAINS.

17. BASE PLATES, ANCHOR BOLTS, SUPPORT ANGLES, ETC., BELOW GRADE SHALL BE COVERED WITH A MINIMUM OF 3" CONCRETE.

18. PROVIDE CONTINUOUS WATERSTOP AT HORIZONTAL AND VERTICAL JOINTS BELOW GRADE.

19. SHORING OF COMPOSITE BEAMS AND GIRDERS IS THE RESPONSIBILITY OF THE CONCRETE CONTRACTOR. SEE COMPOSITE BEAM AND DECK NOTES FOR SHORING REQUIREMENTS.

20. FILL SLABS INDICATED ON THE STRUCTURAL DRAWINGS SHALL BE REINFORCED WITH 6x6- W1.4xW1.4 W.W.F., UNLESS NOTED OTHERWISE. SEE ARCHITECTURAL DRAWINGS FOR PLAN DIMENSIONS, THICKNESSES, SLOPES TO DRAIN, ETC.

21. WHERE REINFORCING IS NOT INDICATED OR DEFINED, INCLUDE FOR BID PURPOSES ONLY:

A. WALLS: #5 EACH WAY EACH FACE. SPACING IN INCHES = 140/(WALL THICKNESS IN INCHES) BUT NOT OVER 18" O.C.

B. BEAMS: 1-#9 CONTINUOUS TOP AND BOTTOM FOR EACH 100 SQUARE INCHES OF BEAM CROSS SECTIONAL AREA AND #4 STIRRUPS SPACED AT 1/4 OF BEAM DEPTH FULL LENGTH OF BEAM.

C. COLUMNS: 1-#9 VERTICAL PER 50 SQUARE INCHES OF CROSS SECTIONAL AREA AND #3 TIES @ 9"O.C.

D. SLABS: #5 EACH WAY TOP AND BOTTOM. SPACING IN INCHES = 100/(SLAB THICKNESS IN INCHES) BUT NOT OVER 18" O.C.

ON SHOP DRAWINGS, INDICTE ABOVE REINFORCING AS "PER GENERAL NOTES". SUCH REINFORCING MAY BE REVISED OR RELOCATED BY STRUCTURAL ENGINEER DURING SHOP DRAWING REVIEW.

22. MASONRY DOWELS: PROVIDE, PLACE, AND SPACE TO MATCH MASONRY REINFORCING.

23. PROVIDE STANDARD HOOKS ON BARS TERMINATING AT A CONCRETE FACE UNLESS NOTED (E.G.: EDGES OF OPENINGS, SLAB EDGES, EXPANSION JOINTS, ENDS OF BEAMS, AND AT: TOP, BOTTOM AND ENDS OF WALLS, ETC...).

24. PROVIDE 2-#5 (MINIMUM) @ EACH SIDE OF OPENING. EXTEND 2'-0" BEYOND OPENINGS.

25. PROVIDE 2-#5 (MINIMUM) @ EACH SIDE OF OPENING. EXTEND 2'-0" BEYOND OPENINGS.

PROJECT
NORTH
KEY PLAN
AREA OF CONSTRUCTION

100% PLANNING BOARD SUBMISSION

REVISIONS:

NUM.	DATE	DESCRIPTION

ANDERSON DESIGN GROUP
ARCHITECTURE
PLANNING
INTERIORS
25 WALLKILL AVE•MONTGOMERY•NY 12549
O. 845.294.2724 | F. 845.675.1230
WWW.ADGARCHITECT.COM
CONTACT@ADGARCHITECT.COM

Project: 141 N WATER STREET DEVELOPMENT
CITY OF POUGHKEEPSIE, DUTCHESS COUNTY, N.Y.
Drawing Name: RETAINING WALL

Drawn: VAG | Scale: AS NOTED | Project: 25106 | Date: 11/24/2025

EDPONS ASSOCIATES, P.C. | STRUCTURAL ENGINEERS
385 Wyoming Avenue, Kingston, PA 18704
p 570|824-6340 f 570|824-6720 edpons.com

STATE OF NEW YORK — VINCENT A. OLIVIERI — LICENSED PROFESSIONAL ENGINEER — 096942

Drawing Number: S010

Copyright © all rights reserved - Jason T. Anderson, Architect P.C. / DBA / Anderson Design Group - Architecture - Planning - Interiors / Unauthorized addition or alteration of this document is a violation of the New York State Education Law.

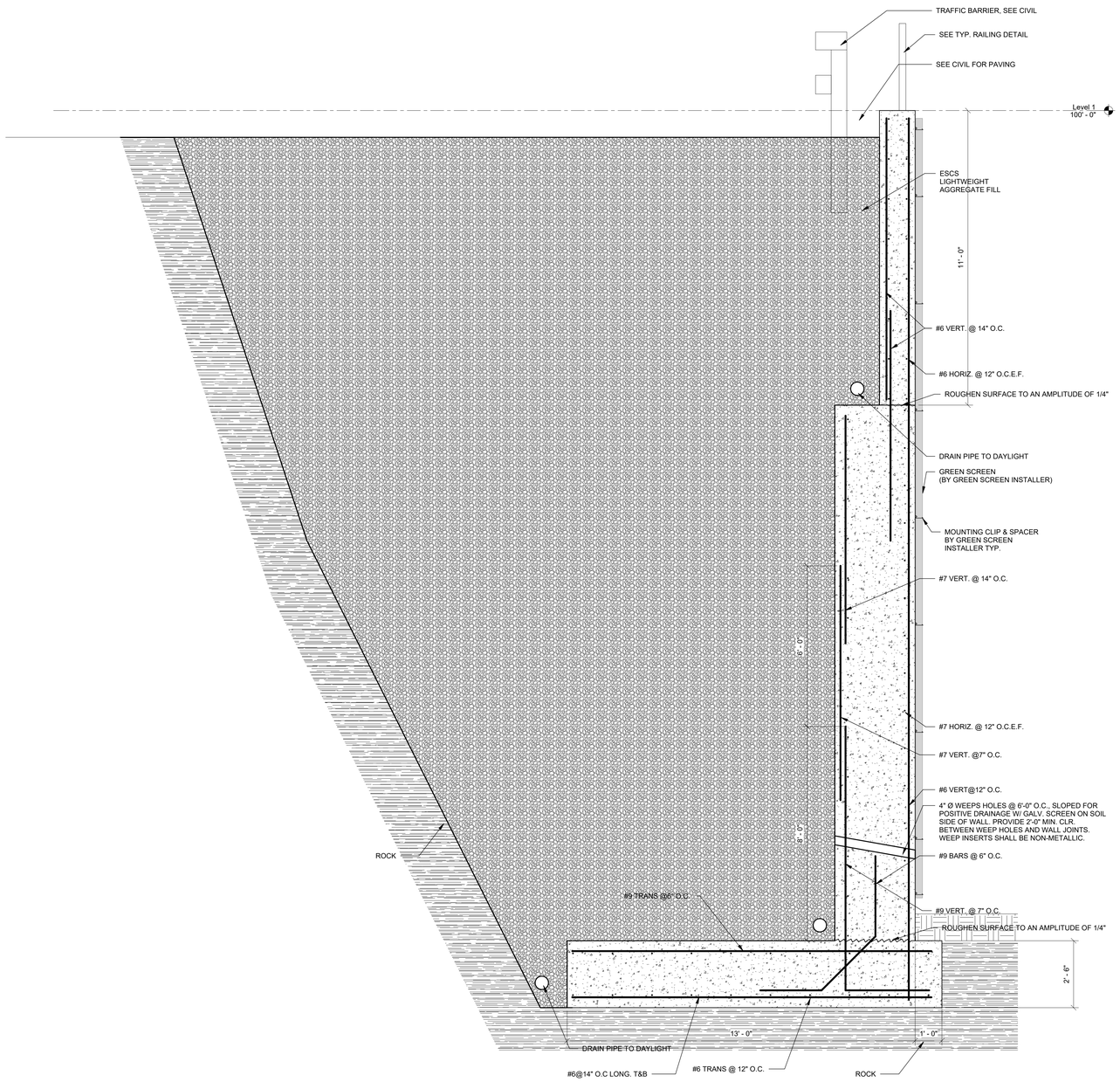

1 S011 SECTION - TYPICAL RETAINING WALL
1/2" = 1'-0"

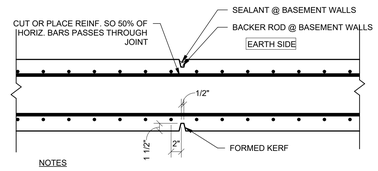

NOTES

1. INSTALL CONTROL JOINTS AT A MAXIMUM SPACING OF 30 TIMES THE WALL THICKNESS FOR WALLS LESS THAN 11" THICK AND 25'-0" ON-CENTER MAXIMUM FOR ALL OTHER WALLS. FOR WALLS TALLER THAN 12'-0" THE MAXIMUM CONTROL JOINT SPACING SHALL BE THE WALL HEIGHT.

2. AT EXTERIOR WALLS THE FOUNDATION WALL CONTROL JOINTS SHOULD BE LOCATED TO ALIGN WITH THE MASONRY CONTROL JOINTS SHOWN ON THE ARCHITECTURAL PLAN. WHERE THIS IS NOT POSSIBLE DUE TO A PIER AT THE CONTROL JOINT LOCATION THE CONTROL JOINT IN THE FOUNDATION SHOULD BE LOCATED ADJACENT TO THE PIER.

3. A CONTROL JOINTS SHOULD BE LOCATED WITHIN 10 TO 15 FEET OF A WALL CORNER.

2 S011 DETAIL-WALL CONTROL JOINT
N.T.S.

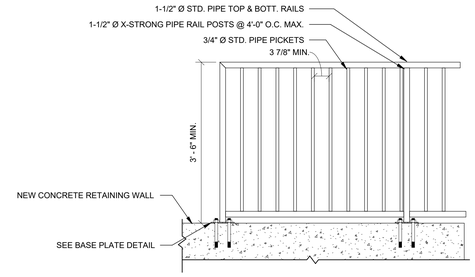

NOTE:
RAILING SHALL BE PAINTED WITH RUST INHIBITING PAINT. COLOR BY OWNER.

3 S011 DETAIL - RAILING
3/4" = 1'-0"

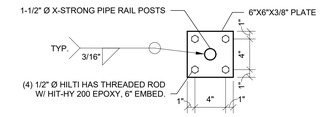

4 S011 DETAIL - RAILING BASE PLATE
1 1/2" = 1'-0"

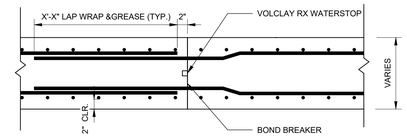

5 S011 DETAIL - WALL CONSTRUCTION JOINT
1" = 1'-0"

FOUNDATIONS:

DESIGN:

1. THE FOUNDATION HAS BEEN DESIGNED IN ACCORDANCE WITH THE RECOMMENDATIONS MADE IN THE "SOILS AND FOUNDATION INVESTIGATION" BY DANIEL LOUCKS.
2. BACKFILLING:
   - A. DO NOT BACKFILL BASEMENT WALLS AND GRADE BEAMS UNTIL BRACING FLOORS ARE IN PLACE OR ADEQUATE TEMPORARY BRACING IS INSTALLED.
   - B. WHERE FOUNDATION WALLS ARE TO HAVE EARTH PLACED ON EACH SIDE, PLACE FILL SIMULTANEOUSLY SO AS TO MAINTAIN A COMMON ELEVATION ON EACH SIDE OF THE WALL.
   - C. BACKFILL UNDER FOUNDATIONS WITH CONCRETE OR AS APPROVED BY GEOTECHNICAL ENGINEER.

SPREAD FOOTINGS:

1. FOOTINGS SHALL BEAR ON APPROVED COMPACTED FILL CAPABLE OF SUSTAINING A NET BEARING PRESSURE OF 10 K.S.F. UNDER FULL SERVICE LIVE AND DEAD LOAD.
2. TOP OF FOOTING (T/F) ELEVATIONS ARE SHOWN ON THE PLANS.
3. FOOTINGS SHALL NOT BE POURED INTO AN EARTH-FORMED TRENCH U.N.O..
4. ALL BEARING MATERIAL SHALL BE INSPECTED BY THE GEOTECHNICAL ENGINEER PRIOR TO CONCRETE PLACEMENT. THE GEOTECHNICAL ENGINEER SHALL BE THE SOLE JUDGE AS TO THE SUITABILITY OF THE BEARING MATERIAL. FOOTING ELEVATIONS SHALL BE ADJUSTED AS REQUIRED.
5. BOTTOM OF EXTERIOR FOOTINGS SHALL BEAR A MINIMUM OF 48" BELOW FINAL GRADE FOR FROST PROTECTION.
6. SLIDING RESISTANCE (ALLOWABLE LOADS):
   - A. COEFFICIENT OF SLIDING FRICTION = 0.40
   - B. PASSIVE PRESSURE = 300 P.S.F./FT
7. SLAB-ON-GRADE HAVE BEEN DESIGNED USING A SUBGRADE MODULUS OF 175 P.C.I.

RETAINING WALLS:

1. ACTIVE DESIGN PRESSURE IS EQUAL TO AN EQUIVALENT FLUID PRESSURE OF 22 P.C.F.
2. PASSIVE DESIGN PRESSURE IS EQUAL TO AN EQUIVALENT FLUID PRESSURE OF 300 P.C.F.
3. SURCHARGE LOADS ARE 100 P.S.F. AT THE SURFACE.
4. COEFFICIENT OF SLIDING FRICTION:

   CONCRETE/SOIL = 0.40
5. FOUNDATION WALLS THAT RETAIN EARTH SHALL BE BRACED AGAINST BACKFILLING PRESSURES UNTIL FLOOR SLABS AT TOP AND BOTTOM ARE IN PLACE.
6. WHERE FOUNDATION WALLS ARE TO HAVE EARTH PLACED ON EACH SIDE, PLACE FILL SIMULTANEOUSLY SO AS TO MAINTAIN A COMMON ELEVATION ON EACH SIDE OF THE WALL.
7. DO NOT BACKFILL UNTIL CONCRETE HAS REACHED ITS 28 DAY STRENGTH.

ESCS BACKFILL MATERIAL:

1. AGGREGATE PHYSICAL PROPERTIES
   - A. SOUNDNESS LOSS: THE MAXIMUM SOUNDNESS LOSS SHALL BE 30% WHEN TESTED, WITH 4 CYCLES OF MAGNESIUM SULFATE, IN ACCORDANCE WITH AASHTO T 104.
   - B. ABRASION RESISTANCE: THE MAXIMUM ABRASION LOSS SHALL BE 40% WHEN TESTED IN ACCORDANCE WITH ASTM C 131.
   - C. CHLORIDE CONTENT: THE MAXIMUM CHLORIDE CONTENT SHALL BE 100 PPM WHEN TESTED IN ACCORDANCE WITH AASHTO T 291
   - D. GRADING: AGGREGATE GRADING COMES IN A WIDE VARIETY OF SIZES AND IS SPECIFIED BASED ON PERFORMANCE NEEDS. GRADING SHALL BE TESTED IN ACCORDANCE WITH ASTM 136.
2. PROJECT PERFORMANCE SPECIFICATION
   - A. IN-PLACE BULK DENSITY (UNIT WEIGHT): THE MAXIMUM IN-PLACE COMPACTED MOIST DENSITY SHALL BE 65 LBS/FT3 WHEN TESTED IN ACCORDANCE WITH THE METHOD SPECIFIED BY THE ENGINEER.
   - B. STABILITY THE MINIMUM ANGLE OF INTERNAL FRICTION SHALL BE 40 DEGREES WHEN TESTED IN ACCORDANCE WITH THE METHOD SPECIFIED BY THE ENGINEER.
3. CONSTRUCTION
   - A. METHOD OF CONSTRUCTION: LIGHTWEIGHT FILL SHALL BE PLACED IN UNIFORM LAYERS. THE ACTUAL LIFT THICKNESS, AND EXACT NUMBER OF PASSES BY EQUIPMENT USED WILL BE DETERMINED BY THE ENGINEER, DEPENDING ON THE PROJECT REQUIREMENTS (I.E., STABILITY, COMPACTION, DENSITY)
   - B. IN CONFINED AREAS VIBRATORY PLATE COMPACTION EQUIPMENT SHALL BE USED (5 HP TO 20 HP) WITH A MINIMUM OF TWO PASSES IN 6" LIFTS FOR A 5 HP PLATE AND 12" LIFTS FOR A 20 HP PLATE.
   - C. THE CONTRACTOR SHALL TAKE ALL NECESSARY PRECAUTIONS WHEN WORKING ADJACENT TO THE LIGHTWEIGHT FILL TO ENSURE THAT THE MATERIAL IS NOT OVER COMPACTED. CONSTRUCTION EQUIPMENT, OTHER THAN FOR PLACEMENT AND COMPACTION, SHALL NOT OPERATE ON THE EXPOSED LIGHTWEIGHT FILL.
   - D. AGGREGATE LOOSE BULK DENSITY (UNIT WEIGHT): THE MAXIMUM AGGREGATE LOOSE BULK DENSITY, SHALL BE 65 LBS/FT^3 WHEN TESTED IN ACCORDANCE WITH ASTM C 29.

EDPONS ASSOCIATES, P.C. | STRUCTURAL ENGINEERS
385 Wyoming Avenue, Kingston, PA 18704
p 570|824-6340 f 570|824-6720 edpons.com

PROJECT

NORTH

KEY PLAN: AREA OF CONSTRUCTION

100% PLANNING BOARD SUBMISSION

REVISIONS:

NUM.	DATE	DESCRIPTION

ANDERSON DESIGN GROUP
ARCHITECTURE
PLANNING
INTERIORS
25 WALLKILL AVE•MONTGOMERY•NY 12549
O. 845.294.2724 | F. 845.675.1230
WWW.ADGARCHITECT.COM
CONTACT@ADGARCHITECT.COM

Project: 141 N WATER STREET DEVELOPMENT
CITY OF POUGHKEEPSIE, DUTCHESS COUNTY, N.Y.

Drawing Name: RETAINING WALL DETAILS

Drawn: VAG	Scale: AS NOTED	Project: 25106	Date: 11/24/25

STATE OF NEW YORK · VINCENT A GRUNZ · 096942 · LICENSED PROFESSIONAL ENGINEER

Drawing Number: S011

Copyright © all rights reserved - Jason T. Anderson, Architect P.C. / DBA / Anderson Design Group - Architecture - Planning - Interiors / Unauthorized addition or alteration of this document is a violation of the New York State Education Law.

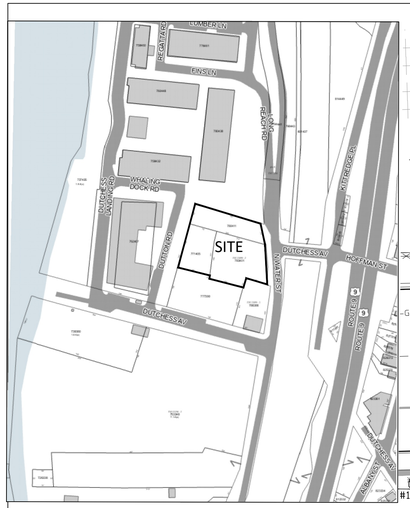

LOCATION MAP
1"=200'±

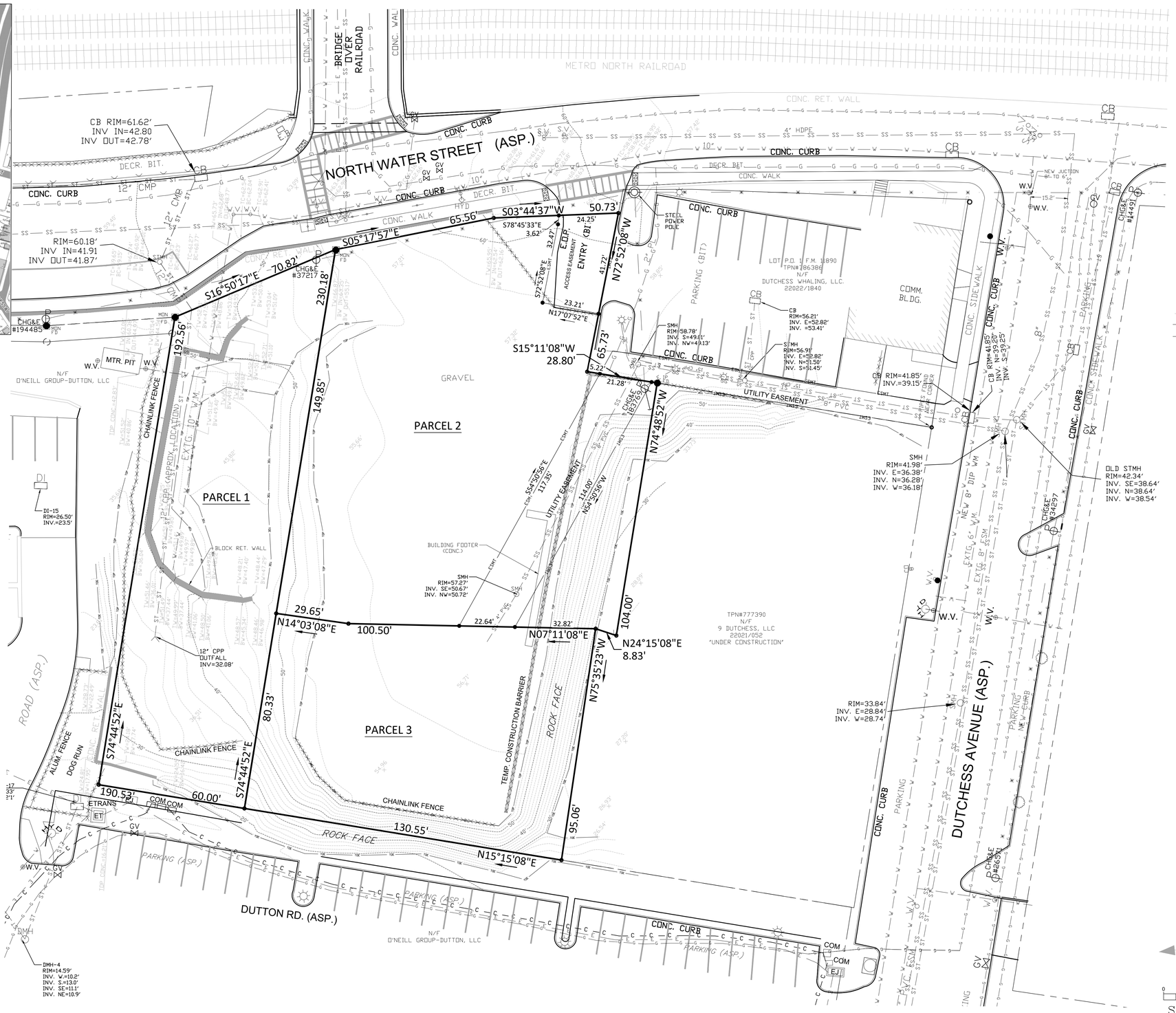

LEGEND

IP	IRON PIN	●	BOLLARD
N/F	NOW OR FORMERLY	CHG&E 23	UTILITY POLE WITH OWNER & #
TPN	TAX PARCEL NUMBER	⟵	POLE ANCHOR
FD	FOUND IN FIELD	⊸	SIGN – 1 POST
FM	FILED MAP	8202 1257	MILE MARKER SIGN
E.O.P.	EDGE OF PAVEMENT	⊸⊸	SIGN – 2 POSTS
E.O.C.	EDGE OF CURB	CB	CATCH BASIN
PIPE	IRON PIPE	GV	GAS VALVE
MON	CONC. MONUMENT	TB	TRAFFIC SIG. BOX
MPK	MAGNETIC NAIL		TELEPHONE PEDESTAL
SET	SET IN FIELD		TRAFFIC SIGNAL POLE
(ASP.)	ASPHALT PAVEMENT	STMH	STORM MANHOLE
(GRVL.)	GRAVEL	SMH	SEWER MANHOLE
CONC.	CONCRETE	W	WATER VALVE
L1706 P0507	DEED LIBER/PAGE	HYD	FIRE HYDRANT
	PROPERTY LINE (SUBJECT LOT)	WELL	WELL
	PROPERTY LINE (OTHER LOTS)	YD	YARD DRAIN
	EASEMENT		X-WALK SWITCH
	OVERHEAD SERVICE WIRES		LIGHT POLE
	FENCE, WIRE OR CHAINLINK		
	FENCE, STOCKADE		
	STORM PIPE BURIED		
	SEWER PIPE BURIED		
	WATER PIPE BURIED		
	TREE/BRUSH LINE		
	TOP SLOPE		
	TOE SLOPE		
	STONEWALL		

PARCELS

PARCEL 1 – TPN: 780411, AREA=0.291± ACRES
FORMERLY HOFFMAN ST.

PARCEL 2 – TPN: 783401, AREA=0.480± ACRES
PORTION OF LOT 2, F.M. 11890

PARCEL 3 – TPN: 771405, AREA=0.257± ACRES

TOTAL AREA=1.028± ACRES

EASEMENTS

ACCESS EASEMENT, AREA=0.021± ACRES

UTILITY EASEMENT, AREA=0.053± ACRES
ON PARCEL 2

UTILITY EASEMENT, AREA=0.031± ACRES
OFF PARCEL 2

STATE PLANE

0 20 40 Feet

SCALE: 1"=20'

THIS PLAT IS ACCURATE AND CORRECT BY:
LARRY L. LYNN, L.S.

WAPPINGERS FALLS, NY
N.Y.S.P.L.S. No. 050531

-- I HEREBY CERTIFY TO --

141 NORTH WATER STREET, LLC

ALL CERTIFICATIONS HEREON ARE VALID FOR THIS PLAN AND COPIES THEREOF ONLY IF SAID PLAN OR COPIES BEAR THE IMPRESSED SEAL OF THE SURVEYOR WHOSE SIGNATURE APPEARS HEREON.

PREPARED BY LARRY L. LYNN, L.S. "LARRY L. LYNN, LAND SURVEYOR, P.C." 66 MIDDLEBUSH RD. STE. G107 WAPPINGERS FALLS, NY 12590, (845) 463-2733.
PLAN COMPLETED BY ME OR UNDER MY SUPERVISION ON MAY 27, 2025.
BASED ON A FIELD SURVEY COMPLETED BY ME OR UNDER MY SUPERVISION ON MAY 27, 2025.
UNAUTHORIZED ALTERATION OR ADDITIONS TO THIS PLAN IS A VIOLATION OF SECTION 7209(2) OF THE NEW YORK STATE EDUCATION LAW.
SUBJECT TO THE FINDINGS OF A CURRENT TITLE SEARCH.
SUBJECT TO COVENANTS, EASEMENTS, RESTRICTIONS AND AGREEMENTS OF RECORD.
COPYRIGHT© 2025 LARRY L. LYNN, ALL RIGHTS RESERVED.

PROPERTY NOTES:

1. TAX PARCEL NUMBERS ARE AS SHOWN ON TAX MAP 131300-6062-59

2. FILED MAP REFERENCES:
F.M. 11890 - "SUBDIVISION PLAT FOR WATER STREET DEVELOPMENT COMPANY, LLC"
F.M. 7354 - "SUBDIVISION OF PROPERTY , A.C. DUTTON LUMBER CORPORATION"

4. EASEMENTS AS PER F.M. 11890

5. PROPERTY LINES ALONG N. WATER STREET AS PER TAKING BY CITY OF POUGHKEEPSIE.

SPECIAL NOTES:

1. TOPOGRAPHY AT 1' INTERVAL, VERTICAL DATUM IS NAVD88.

2. BURIED UTILITIES SHOWN ARE APPROXIMATE AS PER SURFACE EVIDENCE OR MARK-OUTS, CONTACT UTILITY COMPANIES FOR EXACT LOCATIONS AND CONTACT 811 PRIOR TO EXCAVATIONS.

REVISIONS:
1.

TOPOGRAPHIC SURVEY FOR/TO
141 NORTH WATER STREET, LLC

CITY OF POUGHKEEPSIE
COUNTY OF DUTCHESS
STATE OF NEW YORK
MAY 27, 2025

JSB
45-28

Material and Color Palette



North/ South Fenestration:
Black Anodized Aluminum



First Floor, Elevator Lobby, Penthouse Glazing:
Solarban 65 - Low Reflectance, or Equal



Residential Windows:
Black: UPVC, or Equal







Exterior Facade:
Material: Terracotta
Color: Varies



Exterior Facade:
Material: Hardi Panel
Color: Birch Tree or Similar

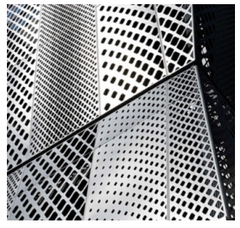

Parking Garage Screen:
BOK Modern Panels
Pattern: Custom or Equal
Material: Aluminum (Powder Coated)



Exterior Railings:
BOK Modern Panels
Pattern: B21 or Equal
Material: Aluminum (Powder Coated)

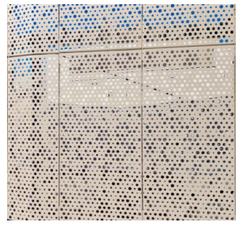

Roof Screening:
Arktura Panels
Pattern: Custom or Equal
Material: Aluminum (Powder Coated)



Penthouse Demising Screening:
Bok Modern Panels
Pattern: Custom or Equal
Material: Aluminum (Powder Coated)

Southwest Exterior Rendering



Southwest Exterior Dusk Rendering



Northwest Exterior Rendering



Northwest Exterior Dusk Rendering



Northeast Exterior Rendering



Northeast Exterior Dusk Rendering



River View Exterior Rendering



River View Exterior Dusk Rendering



Agency Use Only [If applicable]

Project:	141 N Water Street
Date:	1.27.26

Short Environmental Assessment Form
Part 2 - Impact Assessment

Part 2 is to be completed by the Lead Agency.
Answer all of the following questions in Part 2 using the information contained in Part 1 and other materials submitted by the project sponsor or otherwise available to the reviewer. When answering the questions the reviewer should be guided by the concept "Have my responses been reasonable considering the scale and context of the proposed action?"

	No, or small impact may occur	**Moderate to large impact may occur**
1. Will the proposed action create a material conflict with an adopted land use plan or zoning regulations?	☑	☐
2. Will the proposed action result in a change in the use or intensity of use of land?	☑	☐
3. Will the proposed action impair the character or quality of the existing community?	☑	☐
4. Will the proposed action have an impact on the environmental characteristics that caused the establishment of a Critical Environmental Area (CEA)?	☑	☐
5. Will the proposed action result in an adverse change in the existing level of traffic or affect existing infrastructure for mass transit, biking or walkway?	☑	☐
6. Will the proposed action cause an increase in the use of energy and it fails to incorporate reasonably available energy conservation or renewable energy opportunities?	☑	☐
7. Will the proposed action impact existing: a. public / private water supplies?	☑	☐
b. public / private wastewater treatment utilities?	☑	☐
8. Will the proposed action impair the character or quality of important historic, archaeological, architectural or aesthetic resources?	☑	☐
9. Will the proposed action result in an adverse change to natural resources (e.g., wetlands, waterbodies, groundwater, air quality, flora and fauna)?	☑	☐
10. Will the proposed action result in an increase in the potential for erosion, flooding or drainage problems?	☑	☐
11. Will the proposed action create a hazard to environmental resources or human health?	☑	☐

PRINT FORM

Agency Use Only [If applicable]

Project: 141 N Water Street

Date: 1.27.26

Short Environmental Assessment Form
Part 3 Determination of Significance

For every question in Part 2 that was answered "moderate to large impact may occur", or if there is a need to explain why a particular element of the proposed action may or will not result in a significant adverse environmental impact, please complete Part 3. Part 3 should, in sufficient detail, identify the impact, including any measures or design elements that have been included by the project sponsor to avoid or reduce impacts. Part 3 should also explain how the lead agency determined that the impact may or will not be significant. Each potential impact should be assessed considering its setting, probability of occurring, duration, irreversibility, geographic scope and magnitude. Also consider the potential for short-term, long-term and cumulative impacts.

On 12/16/2025 it was confirmed by Deputy Zoning Administrator Judith Knauss that the proposed action is discrepant with Section 19-6.8(1)(b) requiring that "bulkheads, elevator penthouses and other structures shall be setback 1' from the edge of the roof for each additional foot in height greater than the permitted height." This constitutes a third area variance and conflict with the adopted zoning regulations not described in the negative declaration of environmental significance dated 11/19/2025. It is the finding of this board that an additional area variance does not create the potential for a moderate to large environmental impact. The project is still compliant with the zoning code regarding the overwhelming majority of relevant dimensional regulations such as height, setback, density and parking.

☐ Check this box if you have determined, based on the information and analysis above, and any supporting documentation, that the proposed action may result in one or more potentially large or significant adverse impacts and an environmental impact statement is required.

☑ Check this box if you have determined, based on the information and analysis above, and any supporting documentation, that the proposed action will not result in any significant adverse environmental impacts.

Planning Board	1.27.26
Name of Lead Agency	Date
Anne Saylor	Chair
Print or Type Name of Responsible Officer in Lead Agency	Title of Responsible Officer
Signature of Responsible Officer in Lead Agency	Signature of Preparer (if different from Responsible Officer)

PRINT FORM

New York State
Parks, Recreation and
Historic Preservation

KATHY HOCHUL
Governor

KATHY MOSER
Acting Commissioner

October 30, 2025

Natalie Quinn
Director of Planning and Development
KARC Planning Consultants Inc
PO Box 924
Poughkeepsie, NY 12602

Re: SEQRA
Construction of a 56-unit Multi-Family Development
141 N Water St, Poughkeepsie, Dutchess County, NY 12601
25PR09263

Dear Natalie Quinn:

Thank you for requesting the comments of the Office of Parks, Recreation and Historic Preservation (OPRHP). We have reviewed the project in accordance with the New York State Historic Preservation Act of 1980 (Section 14.09 of the New York Parks, Recreation and Historic Preservation Law). These comments are those of the OPRHP and relate only to Historic/Cultural resources. They do not include potential environmental impacts to New York State Parkland that may be involved in or near your project.

Based upon this review, it is the opinion of OPRHP that no properties, including archaeological and/or historic resources, listed in or eligible for the New York State and National Registers of Historic Places will be impacted by this project.

If further correspondence is required regarding this project, please be sure to refer to the OPRHP Project Review (PR) number noted above. If you have any questions, please contact Mariana Montes Staines at the following email address:

Mariana.MontesStaines@parks.ny.gov

Sincerely,

R. Daniel Mackay

Deputy Commissioner for Historic Preservation
Division for Historic Preservation

December 3, 2025

Joseph A. Chenier, Jr. CPESC, CPMSM
Assistant Civil Engineer
The City of Poughkeepsie
Department of Public Works & Engineering
62 Civic Center Plaza, Second Floor
Poughkeepsie, NY 12601

RE: 141 North Water Street-Site Work Cost Estimate
6062-59-771405
141 North Water Street
Poughkeepsie, NY 12601

Dear Mr. Chenier,

As requested, please find a breakdown of costs for the redevelopment at 141 North Water Street project site work.

Concrete Sidewalk: $15,000
Concrete Curbing: $24,000
Asphalt Paving: $25,000
Retaining Walls (nonstructural): $8,000
Retaining Wall (structural): TBD on final design
Electric Vehicle Charging Stations: $30,000
Wooden Guardrail: $10,000
Concrete Pavers $16,000
Underground Water: $40,000
Underground Sewer: $28,000
Underground Stormwater Collection System: $50,000

Sincerely,
Land Resource Consultants Engineering & Surveying, LLC,

By: _____
Shawn Curran, Project Manager

PRELIMINARY ENGINEERING REPORT

Prepared for

WATER STREET DEVELOPMENT

Located at

141 North Water Street
City of Poughkeepsie, Dutchess County, NY
Tax ID #: 6062-59-771405

Submitted: December 3, 2025

Last Revised: January 13, 2026

Prepared for

141 North Water Street, LLC

135 North Water Street
Poughkeepsie, NY 12601



Prepared by:

Land Resource Consultant Engineering & Surveying, LLC
Loureiro NY, P.C.
85 Civic Center Plaza, Suite 204, Poughkeepsie, NY 12601 (845) 243-2880
www.lrcconsult.com
Civil Engineering ♦ Land Surveying ♦ Landscape Architecture ♦ Land Planning ♦ Laser Scanning & BIM ♦ Subsurface Utility Engineering

TABLE OF CONTENTS

1.0 INTRODUCTION 1
1.1 Location 1
1.2 Proposed Project Description 1
2.0 WATER SERVICES 1
2.1 Water Demand and Supply 1
2.2 Proposed Water Supply 2
2.3 Water Infrastructure Improvements 2
2.4 Fire Suppression 2
3.0 WASTEWATER SERVICES 2
3.1 Design Wastewater Flows 2
3.2 Existing Wastewater Treatment 3
3.3 Wastewater Infrastructure Improvements 3
4.0 WATER AND WASTEWATER SERVICES – CONCLUSION 3

APPENDICES

Appendix A – Fire Hydrant Flow Data

1.0 INTRODUCTION

1.1 Location

The subject property consists of one existing parcel with a total of 1.028 acres. The parcel is identified as Tax Parcel 6062-59-771405. The project is located at 141 North Water Street, in the City of Poughkeepsie, NY. The project is located on the western side of North Water Street and at the intersection with Hoffman Street. The project has UTM coordinates of 588341 Easting and 4618373 Northing. Below in ***Figure 1*** is a vicinity map showing the outer limits of the proposed project.



Figure 1: Vicinity Map

1.2 Proposed Project Description

The proposed project is a modification to the existing site plan that was approved in 2023. The proposed modification is proposing to change the number of units from 20 units to 56 units, with 72 parking spaces provided. Of the 72 spaces, 5 spaces will be outside of the building. The building will be a 5-story condominium building with 1 level of subsurface parking. The project will also include utility connections, landscaping, lighting, water, sewer and stormwater management features.

2.0 WATER SERVICES

2.1 Water Demand and Supply

The estimated consumption values are derived from Table B-3 “Typical per Unit Hydraulic Loading Rates” of the New York State Department of Environmental Conservation (NYSDEC) Division of Water

"Design Standards for Intermediate Sized Wastewater Treatment Systems", March 5, 2014. A summary of the projected sanitary sewer flow/water consumption is as follows:

Water Street Development						
Sanitary Sewer Flow / Water Consumption Projections						
PROPOSED DEVELOPMENT						
Location	**Use**	**Size**		**Rate***		**Flow (GPD)**
Residential Building	Residential					
Studio		11	Units	110	per Bedroom	1,210
1-Bed		19	Units	110	per Bedroom	2,090
2-Bed		26	Units	110	per Bedroom	5,720
					Total Proposed Daily Flow:	**9,020**

2.2 Proposed Water Supply

Water supply for the project will be provided from the City of Poughkeepsie municipal water system. The water is supplied by the joint Town and City water treatment facility located at 3431 North Road, Poughkeepsie, NY 12601. The water is supplied from the municipal line located off of North Water Street. The proposed development will connect a 6" line into the existing 10" water main.

2.3 Water Infrastructure Improvements

A new water meter and backflow prevention device will be installed in the mechanical room in the proposed building. The building will include a new FDC connection and knox box located on the building frontage.

2.4 Fire Suppression

The proposed building will be equipped with sprinkler system in accordance with NFPA guidelines. There will be one new fire hydrant installed in the front of the building.

3.0 WASTEWATER SERVICES

3.1 Design Wastewater Flows

As discussed in Section 2.1, the estimated consumption values are derived from Table B-3 "Typical per Unit Hydraulic Loading Rates" of the New York State Department of Environmental Conservation (NYSDEC) Division of Water "Design Standards for Intermediate Sized Wastewater Treatment Systems", March 5, 2014. The total average day demand for sewer and water is 9,020 GDP for the project. Using a peaking factor of 4.0, as recommended by the NYSDEC, the design max hourly flow rate is 25.05 GPM.

3.2 Existing Wastewater Treatment

The project will connect to the existing municipal sewer collection system. Wastewater generated by the proposed project will be treated by the City/Town of Poughkeepsie Municipal Wastewater Treatment Plant. The plant is located off Hudson Street in the Town of Poughkeepsie.

3.3 Wastewater Infrastructure Improvements

The wastewater is discharged into an existing sanitary manhole that connects into the municipal system located in Dutchess Avenue. The propose building will include a new 6" sanitary sewer line connection.

4.0 WATER AND WASTEWATER SERVICES – CONCLUSION

Based on the planned development of water/wastewater consumption estimates, the site will have a maximum total sewer and water usage of 9,020 GPD. The water and sewer system will be connected to the City of Poughkeepsie water and sewer systems, using existing infrastructure located at the site. The proposed water and wastewater services, from the City of Poughkeepsie Department of Public Works, have adequate infrastructure and capacity to handle the proposed development.

The City of Poughkeepsie Engineering Department will, as part of the site plan approval process, review and approve the water and sewer connections. The required testing parameters are also reviewed by the City Engineering Department and included in the approved plan.

APPENDIX A

Fire Hydrant Flow Data

Hydrant Report

Poughkeepsie Fire Department

Hydrant#: 0023

General Information

Type: *Municipal*

Status: *In Service*

Street # and Name: *N WATER ST*

Location: *Westside by Hoffman Street Bridge.*

Cross Street:

District:

Latitude: *41.71219782*

Longitude: *-73.93759686*

Static Water Capacity *0*

Box Code:

Size and Type

NFPA Class: *1501 GPMS Plus*

Number Outlets: *3*

Main Size: *10*

Gate/Outlet Size: *2.5*

Steamer Size: *4.5*

Flow Data

Static Pressure: *110*

Residual Pressure: *40*

Pitot Pressure *24*

Outlet Size Used: *2.5*

Coefficient: *0.9*

Flow Rate: *822*

@ 0 PSI: *1049*

@ 20 PSI: *941*

As of: *06/04/2025*

Narrative

Testing and Action History

Date	ID #	Description	Flow Rate	Static Pressure	Residual Pressure
04/25/2025	6659	Annual Test	822	110	40
04/24/2024	5203	Flushed	0	0	0
05/01/2023	6436	Annual Test	1,007	114	48
06/02/2022	6321	Retest	919	116	39
05/27/2022	6321	Retest	919	116	34
05/03/2022	5821	Annual Test	822	118	40
07/19/2021	3915	Annual Test	949	114	38
05/08/2019	5718	Annual Test	1,210	112	64
06/14/2017	5568	Annual Test	1,150	115	70
06/15/2016	3915	Annual Test	1,186	120	72

07/15/2015	6072	Annual Test	1,321	115	70
06/23/2014	5609	Annual Test	949	115	92

DEED

This Deed is made on [MONTH] _____, 2025, between 141 NORTH WATER STREET, LLC, of 135 N Water Street, Poughkeepsie, NY 12601, as grantor, and CITY OF POUGHKEEPSIE, of 62 Civic Center Plaza, Poughkeepsie, NY 12601, as grantee.

The grantor in consideration of $10.00 and other good and valuable consideration, given by the grantee to the grantor, the receipt of which is acknowledged, has granted, bargained, and conveyed, and does grant, bargain, and convey, to grantee the right to operate, reconstruct, replace, remove, maintain, and use stormwater infrastructure, sanitary lines and all necessary laterals, together with a right-of-way, on, along, and in all of the described easement strip of land located on the map entitled

_____ and described as follows:

(metes and bounds to be filled in post-approval)

Accompanying this right is the further right in grantee to enter and depart over and the lot as shown in Filed Map #_____and to make reasonable use of adjacent areas to effect the purposed of the easement. The right will be exercised in a reasonable manner.

Grantor will have the right to use the easement strip described in this deed for purposes not inconsistent with grantee's full enjoyment of the rights granted, provided that grantor will not erect or construct any building or other structure.

In the event the grantee enters the easement area, grantee will restore grantor's land as near as practicable to its prior condition, and will indemnify grantor against any loss and damage that will be caused by any wrongful or negligent act of omission of grantee or of its agents or employees in the course of their employment.

The provisions of this deed will inure to the benefit of and bind the heirs, successors, and assigns.

DRAFT

Grantor has signed this deed the day and year first above written.

141 NORTH WATER STREET, LLC

BY:_____
JACOB WAGSCHAL

STATE OF NEW YORK)
) ss:
COUNTY OF)

On the _____ day of _____ in the year _____, before me, the undersigned, personally appeared Jacob Wagschal, personally known to me or proved to me on the basis of satisfactory evidence to be the individual(s) whose name(s) is (are) subscribed to the within instrument and acknowledged to me that he/she/they executed the same in his/her/their capacity(ies), and that by his/her/their signature(s) on the instrument, the individual(s) or person upon behalf of which the individual(s) acted, executed the instrument.

_____
NOTARY PUBLIC

DRAFT

DRAINAGE REPORT

Prepared for

WATER STREET DEVELOPMENT

Located at

141 North Water Street
City of Poughkeepsie, Dutchess County, NY
Tax ID #: 6062-59-771405

Submitted:

July 22, 2025

Revised:

September 30, 2025

Prepared for

141 North Water Street, LLC

135 North Water Street
Poughkeepsie, NY 12601

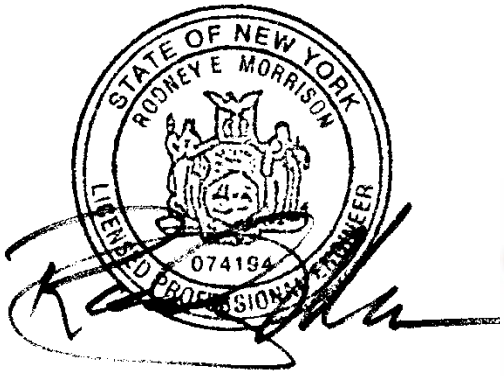

Prepared by

Land Planning ♦ Civil Engineering ♦ Environmental Services ♦ Land Surveying ♦ Landscape Architecture

85 Civic Center Plaza, Suite 204
Poughkeepsie, NY 12601
Phone 845-243-2880
Fax 845-265-8175
www.lrcconsult.com

Offices in Connecticut, New York, New Jersey & New Hampshire

LRC Engineering & Surveying, DPC
LRC Engineering & Surveying, LLC
LRC Environmental Services, Inc.

TABLE OF CONTENTS

1.0 EXECUTIVE SUMMARY
2.0 SITE DESCRIPTION
- 2.1 Location
- 2.2 Topography
- 2.3 Land Cover and Site Development
- 2.4 Soils
- 2.5 Streams, Water Bodies, Wetlands and Floodplains

3.0 PROJECT DESCRIPTION
4.0 STORMWATER EROSION AND SEDIMENT CONTROLS
- 4.1 Erosion and Sediment Controls
- 4.2 Other Pollutant Controls
- 4.3 Best Management Practices

5.0 CONSTRUCTION SEQUENCE SCHEDULING
- Pre-Construction Activities
- During Construction Activities
- Post-Construction Activities

6.0 HYDROLOGIC AND HYDRAULIC ANALYSIS
- 6.1 Proposed Stormwater Management – Pre vs. Post
- 6.2 Hydraulic Grade Evaluation

7.0 PERMANENT STORMWATER MANAGEMENT FEATURES
- 7.1 Conveyance Piping
- 7.2 Stormtech Underground Infiltration Chambers

APPENDICES

Appendix A: Construction Site Log Book
Appendix B: Owner/Developer and Contractor Certification Forms
Appendix C: Pre/Duration Construction Maintenance Inspection Checklist (NYSDEC Sample)
Appendix D: Soils Map, Rainfall Data, Stormwater Calculations
Appendix E: Pre-Development Run-off Calculations
Appendix F: Post-Development Run-off Calculations
Appendix G: Map Pocket: Pre- & Post-Development Drainage Area Maps
Appendix H: 25-Year Hydraulic Analysis

1.0 EXECUTIVE SUMMARY

This Drainage Report has been prepared pursuant to the Environmental Protection Agencies' (EPA) and the New York State Department of Environmental Conservations (NYSDEC) Stormwater Regulations. This report is also in accordance with the technical standards as presented in the New York Standards and Specifications for Sediment and Erosion Control Manual 2005 and the New York State Stormwater Management Design Manual 2024

2.0 SITE DESCRIPTION

This section briefly describes existing and proposed hydrologic and hydraulic conditions at and around the project site as they relate to Surface Water Management planning considerations. Subsequent sections contain a description of the manner in which site runoff will be managed to minimize effects on areas adjacent to the site.

According to the NYS Department of Environmental Conservation SPDES General Permit for Stormwater Discharges for Construction Activity (GP-0-25-001), a Stormwater Pollution Prevention Plan (SWPPP) must be implemented for any project greater than one (1) acre of disturbance. The total disturbance for this project is approximately 0.95 acres; therefore, a SPDES General Permit is not required.

2.1 Location

The subject property consists of one existing parcel with a total of 1.028 acres. The parcel is identified as Tax Parcel 6062-59-771405. The project is located at 141 North Water Street, in the City of Poughkeepsie, NY. The project is located on the western side of North Water Street and at the intersection with Hoffman Street. The project has UTM coordinates of 588341 Easting and 4618373 Northing. Below in ***Figure 1*** is a vicinity map showing the outer limits of the proposed project.



Figure 1: Vicinity Map

2.2 Topography

The topography at the project area can best be described as flat in the center of the site, but slopes steeply down on the north, west and south side of the property. The high point in the center of the property is approximately 60.5 with the elevation at the property edge on the western side of the property being 34.0, the southern property edge being 28.0 and the northern property edge being 28.0.

2.3 Land Cover and Site Development

The existing land cover for the entire project parcel consists of a combination of an impervious gravel area, asphalt pavement, and overgrown grass area. Currently there are no existing buildings located onsite.

2.4 Soils

Soils mantling the site have been classified by the United States Department of Agriculture (USDA) Soil Survey of Dutchess County, New York. The following soils groups are present, based on the aforementioned mapping:

1. DxC: Dutchess-Cardigan-Urban Land complex, rolling, rocky
    a. These soil formations consist of very deep, well drained Dutchess Soils and moderately deep, well drained Cardigan Soils. These soils are typically found on hill tops and undulating till plains underlain by folded shale bedrock. Slopes are typically complex and range from 5 to 16 percent.

According to NRCS soil hydraulic classifications DxC is a "Class C" soil. A soils map can be found in **Appendix D.**

2.5 Streams, Water Bodies, Wetlands and Floodplains

There are no streams or water bodies located onsite. The nearest water body is the Hudson River located offsite.

3.0 PROJECT DESCRIPTION

The proposed project is a modification to the existing site plan that was approved in 2023. The proposed modification is proposing to change the number of units from 20 units to 56 units, with 70 parking spaces provided. Of the 70 spaces, 5 spaces will be outside of the building. The building will be a 5-story condominium building with 1 level of subsurface parking. The project will also include utility connections, landscaping, lighting and stormwater management features.

With the project disturbance being only 0.94 acres, this falls under the threshold from NYSDEC requiring the preparation of a SWPPP. Site disturbance will be minimized to every extent possible.

4.0 STORMWATER EROSION AND SEDIMENT CONTROLS

Several types of permanent and temporary storm water pollutant controls are required to be installed and implemented for pre-construction, during construction and post-construction as shown on the Construction Plans and per the NYSDEC SPDES General Permit. Guidelines and recommendations can be found in the "New York State Standards and Specifications for Erosion and Sediment Control."

Selection of temporary storm water controls will be on an "as needed basis" and will depend on the specific conditions of the site. Since site characteristics can change significantly during construction, it is important to monitor the site regularly to ensure the proper selection and implementation of the necessary controls. These controls include, but are not limited to, silt fence, drainage swales, check dams, hay bales, stone construction entrances, sediment traps and seeding and mulching.

4.1 Erosion and Sediment Controls

Temporary Stabilization

Silt fences, stabilized stone construction entrances, soil stockpiles, erosion control blankets, and seeding and mulching, as well as other controls will be utilized as temporary surface water management features. See the Erosion and Sediment Control Plan(s) and details sheets for the location, size, quantity, and details of the temporary stormwater management features as described below.

Silt Fence

Silt fence will be used as necessary to reduce the sediment load in the receiving drainage ditches and as a perimeter sediment control device. In addition, silt fencing will be placed on the downslope sides of all disturbed areas 5 ft. from the toe of the slope until more permanent drainage and erosion control structures are established. In cases with environmentally sensitive areas adjacent to the downslope sides of disturbed areas, silt fencing should be placed at the toe of the slope outside the sensitive area. All silt

fence is to be 36" minimum length with built in woven wire mesh (min. 6X6 14 ½ gauge) unless otherwise specified on the construction details.

Inlet Protection

Storm drain inlet protection measures prevent soil, sediment, and debris from entering storm basins. In unpaved areas inlet protection shall consist of a row of silt fence completely encircling the drain inlet. In paved areas inlet protection can consist of stone and block, silt sox, or hanging filter traps as specified on the plans.

Stabilized Stone Construction Entrance

A construction entrance is used at all entrances and exists for construction activities. The stone construction entrance is stabilized to reduce tracking of mud and dirt onto surrounding roads and surfaces.

Erosion Control Blanket

Erosion control blankets are used on steep slopes to provide adequate protection after the slopes have been graded and prior to the establishment of proper vegetation. Blankets are made from many forms of materials and products. Refer to the site-specific details for the erosion control blankets to be used for this job. Erosion control mats are required on all slopes which exceed 1V:2H.

Seeding and Mulching

Seeding and mulching is one of the most important and underutilized erosion control practices. Exposed earths pose the greatest risks for erosion and sediment. In areas where soil disturbance activity has temporarily or permanently ceased, the application of soil stabilization measures must be initiated by the end of the next business day and completed within fourteen (14) days from the date the current soil disturbance activity ceased. Temporarily Ceased means that an existing disturbed area will not be disturbed again within 14 calendar days of the previous soil disturbance.

Soil Stockpile

A soil stockpile is formed with soil excavated to provide proper building elevations. Stockpiled soil is later used to contour the surface to the desired grades, removed from the site, or the material is used for reclamation/restoration of the region following the removal of roads and facilities. All soil piled onsite must be completely enclosed by silt fence around the toe of the slope. The site fence should be installed a minimum of 2 feet from the toe of the slope. The soil pile should have a maximum side slope of 1V:2H. All soil piles must be stabilized with seed and mulch or covered with a plastic tarp if the soil will not be used within fourteen (14) days from the date the current soil pile was created.

Permanent Stabilization

Permanent stormwater stabilization measures include catch basins, piping and other stormwater structures as described in sections 5 and 6. In all instances, the structures associated with the stormwater management system have been sized to accommodate peak flows from the appropriate storm events as required by the governing municipality. All lawns, basins and swales will be permanently seeded and mulched and maintained as necessary to prevent overgrowth.

4.2 Other Pollutant Controls

Paints and Solvents

During construction temporary structures such as construction trailers may be moved on site to store items such as paints, solvents, and gasoline pertinent to the continuation of construction activities. The intention of these structures is to shelter potential contaminants from stormwater and reduce the potential of toxic chemicals from entering the stormwater runoff due to construction activities.

Solvents and detergents that will be used for regular cleaning and maintenance of construction vehicles or temporary structures may be stored on-site. Solvents shall be used in cleaning machinery pursuant to 6 NYCRR Part 750. After use, solvents shall be disposed of in approved containers and removed from site at scheduled intervals.

Fuels

Fuel for construction equipment shall either be obtained from a licensed distributor of petroleum products or from an approved above ground storage tank on site. A distributor may be contracted to arrive on site periodically and fill all equipment, as necessary. All distributors of petroleum products must have adequate liability insurance to mitigate and clean up any spills that occur on site as well as obtain appropriate permits and licenses from the NYSDEC. All above ground storage tanks with a combined capacity of 1,100 gallons shall be registered with the NYSDEC pursuant to 6 NYCRR Part 614 Standards for New and Substantially Modified Petroleum Storage Facilities.

Fuel from construction vehicles may come into contact with stormwater when vehicles are stored outside. Good housekeeping and preventative maintenance procedures shall be implemented to ensure fuel spills and leaks are minimized during refueling and storage. Any small-scale fuel or oil spills must be remedied immediately and contaminated soils shall be disposed of appropriately. A licensed spill prevention and response team shall handle large-scale gasoline spills.

Oil and other petroleum products may be stored on site, in limited quantities, to ensure the continued operation of construction equipment in the event a scheduled delivery is unavailable. Items shall be stored in their original containers within temporary structures and shall not be exposed to stormwater. Used oil and petroleum products shall be stored in approved containers until recycled or disposed of at an approved disposal facility.

Temporary Facilities

Temporary sanitary facilities may be located on site for construction workers. This facility should be located in an accessible and visible location. Such a facility shall be leak and tip proof. A waste management company may be contracted to arrive on site and provide the routine pumping and sanitization of the facility. Such a company shall have adequate liability insurance to mitigate and clean up any spills that occur on site as well as appropriate permits and licenses from the NYSDEC.

Dust Control

Construction vehicles shall enter and exit the site at the stabilized construction entrance. The construction entrance will trap dust and mud that would otherwise be carried off-site by construction traffic. Water trucks will be used as needed during construction to reduce dust generated on the site.

The general contractor will provide dust control in compliance with applicable local and state dust control regulations. The construction entrances will be maintained during the life of the construction and repaired, and/or cleaned, periodically to ensure proper function.

Dewatering

If dewatering is required the water must be free of silt and sediment prior to discharge offsite or to any existing water bodies. If sediment is present, methods of sediment removal may include, but are not limited to; silt bags, temporary sediment traps, temporary sediment basins, or sheet flow across stabilized vegetated surfaces. As the quantity and quality of water cannot accurately be determined prior to excavation dewatering practices must be determined during construction and should be approved by the site engineer prior to commencing any dewatering activities.

Solid Waste

No solid materials are allowed to be discharged from the site with stormwater. All solid waste shall be collected and placed in containers. The containers will be emptied periodically by a contract trash disposal service and hauled away from the site.

Thermal Pollution

Stormwater that comes in contact with roadways, driveways, parking lots or other impermeable surfaces may increase in temperature during warm weather. If stormwater is discharged into surface water bodies, the temperature of the water body may also increase, potentially threatening plant and animal species sensitive to temperature changes as well as providing an environment that may cause nuisance species to flourish.

After development is complete, impervious areas shall be graded to channel water to catch basins and culverts, which in turn convey stormwater to the stormwater management basin. All stormwater shall be stored and treated within the basins and shall be released over a 24 hour period, which shall minimize the potential for raising the temperature of any downstream water bodies.

4.3 Best Management Practices

Throughout construction, care shall be taken to ensure sediment does not enter surface water bodies and chemicals do not enter stormwater, potentially contaminating surface, and groundwater supplies. The following Best Management Practices (BMP) shall be observed to maintain responsible environmental practices on the construction site.

Good Housekeeping

Good housekeeping is essential to reducing the risk of contaminating runoff waters during every stage of construction. The General Contractor shall ensure supervisors train each employee in good housekeeping practices as they pertain to the implementation of this SWPPP.

Immediately following mobilization, the General Contractor shall take an inventory of all equipment and containers containing hazardous or toxic materials and submit this inventory to the Owner/Developer to keep on-site with this Stormwater Pollution Prevention Plan. This inventory shall be updated regularly to reflect changes in the quantity or type of hazardous and toxic materials stored on site. In the event of a spill, the Spill Response Team can refer to the inventory if the contents of the spill are unknown.

All equipment shall be operational while it is stored on site. Inspections shall be conducted regularly to ensure all equipment is free of leaks and that oil and grease are not in contact with soils or stormwater. Portable equipment such as chain saws, drills, as well as hand tools, must be placed within a trailer or under cover at the end of each workday.

A storage area shall be designated on-site where all hazardous or toxic materials are stored. Each employee shall return the materials to the designated storage area following use. Chemicals including oil, grease, solvents, and detergents shall be stored on-site in approved containers only. Used chemicals shall be disposed of in refuse containers and removed periodically. Containers shall be regularly inspected to ensure the integrity of the container and sealed to prevent leaks.

A scheduled clean-up shall occur at the end of each workweek. During this clean up, empty containers of solvents, oils, grease, paints, and detergents shall be disposed of, containers of gasoline shall be placed in trailers where they are not in contact with stormwater and the inventory shall be updated. Empty containers shall not be permitted on the ground.

Preventative Maintenance

All on-site vehicles must be inspected regularly for oil and grease leaks. All leaks shall be repaired immediately upon obtaining the appropriate equipment. If the leak cannot be fixed immediately, it shall be temporarily mitigated to prevent the flow of contaminants onto the soil and potentially into the stormwater. If necessary, the reservoir will be drained to stop the flow of contaminants or the vehicle will be moved under cover. Drip pans shall be used when performing any maintenance or cleaning on construction vehicles.

Spill Prevention and Response

The safety of employees and neighbors shall be of utmost concern when hazardous or toxic chemicals are stored or utilized on-site. Safety Data Sheets (SDS) shall be obtained for all toxic or hazardous substances that are stored on-site to provide employees with a valuable database in assessing risk in the event of a spill.

Any above ground storage tanks on site shall be installed pursuant to 6 NYCRR Part 614. According to the New York State "Minimum Standards for New and Substantially Modified Above Ground Storage Facilities", all tanks installed must meet or exceed the design criteria in one or more of the following design or manufacturing standards: UL No. 142, UL No. 58, API Standard No. 650, API Standard No. 620, CAN4-S601-M84 or CAN4-S630-M84. Tanks constructed of wood, concrete, aluminum, fiberglass reinforced plastic as well as riveted or bolted steel tanks are not permitted. All tanks must have installed leak detection systems, secondary containment, corrosion protection, and undergo periodic monitoring pursuant to all Part 614 requirements.

Should a spill occur, a licensed spill contractor will be contacted to mitigate the potential negative effects of a spill. Additionally, the NYSDEC must be notified of a release of petroleum products. The General Contractor shall have trained employees knowledgeable in the location of sorbent, brooms, rags, and mops in the event of a small-scale spill. An inventory of equipment and its location shall be posted in a visible location as well as kept in proximity to this Pollution Prevention Plan. If the General Contractor

does not have Hazardous Materials trained employees on site, a firm that specializes in handling spills, soil and water contamination shall be called.

After a spill occurs, all personnel not trained in hazardous materials spill response shall be asked to evacuate the immediate area. The NYSDEC Spill Response Team shall be called to investigate the spill and determine if additional actions should be taken to ensure the safety of personnel and nearby residents. Should any employee have a suspected injury, a local emergency squad must be contacted immediately.

5.0 CONSTRUCTION SEQUENCE SCHEDULING

The scale of site construction does not necessitate that this project be a phased construction project; However, the construction will be sequenced to limit the exposed soils to reduce the amount of sediments in runoff water and ultimately preserve the quality of surface waters. The construction method selected is designed to combine development with responsible land management as well as protection of sensitive environments both within the proposed development and the surrounding area.

Temporary and permanent stabilization methods will be implemented before construction begins and will be continuously modified throughout the project to provide the best methods for stormwater management and pollution prevention. For more details pertaining to construction sequence, please refer to the "NYSDEC Instruction Manual for Stormwater Construction Permit" pages 23-26. A typical and sample ordering of site construction activities is as follows:

Pre-Construction Activities

- Identify all natural resources and mark and protect them as necessary i.e trees, vegetation, limits of disturbance.
- Identify on-site and downstream surface water bodies and install controls to protect them from sedimentation.
- Establish temporary stone construction entrance pads to capture mud and debris from the tires of construction vehicles.
- Install perimeter sediment controls such as silt fences, as shown on the project plans.
- Install temporary construction fencing as shown on the project plans or as directed by the site engineer.
- All earth disturbances during this phase should be limited to work necessary to install erosion and sedimentation controls.

During Construction Activities

- As site clearing and grading is completed install runoff and drainage controls as shown on the project plans and as necessary. These controls should reduce run-off flow rates and velocities, as well as divert off site and clean run-off.
- Stabilize the conveyance system i.e., ditches, swales, berms etc. by seeding, mulching, and installing rock check dams.
- Utilize practices to infiltrate stormwater runoff as much as possible when applicable.
- Stabilize all stormwater runoff outlets as shown on the project plans and as necessary.
- Limit soil disturbance to small areas and preserve as much of the existing vegetation as practical.

- Complete all underground utility improvements prior to installation of hard surface improvements.
- All topsoil stockpiles should be staged in an area away from surface waters and storm drains and should be protected and stabilized.
- Earth disturbance is not allowed in established buffers, within any regulated distance from wetlands, or within the high water line of a body of water affected by tidal action or other such protected zones.
- At any location where surface run-off from disturbed or graded areas may flow off-site, sedimentation control measures must be installed to prevent sedimentation from being transported.
- Regular inspections and maintenance should be performed as described in the following section.
- Immediately stabilize soils with seed and mulch upon completion of work. Limit the amount of disturbed soil to the extent possible.

Post-Construction Activities

- Completely stabilize all surfaces with seed and mulch or impervious cover. Do not leave any exposed soil.
- After site work is completed perform routine inspection and maintenance and ensure proper vegetative cover of over 80% is maintained at the site.
- The grass under the panels is a low maintenance, slow growing grass, which will be allowed to grow to a height of approximately 18 to 20 inches. Once the height reaches 18 to 20 inches the grass will be trimmed to 4 to 6 inches and the clippings will be left in place as mulch.

6.0 HYDROLOGIC AND HYDRAULIC ANALYSIS

Stormwater Management Design has the purpose of improving the quality of surface water runoff from all impervious areas and providing retention for increased runoff quantities that may occur. For the proposed project, the appropriate methodology to manage stormwater is to capture and treat runoff for quality and quantity control for the site.

The hydrologic analysis was performed using the Hydro CAD stormwater modeling software, and all data regarding areas has been calculated in AutoCAD. Soils information has been obtained through mapping per the NRCS Dutchess County Soils Survey, onsite deep tests and infiltration tests. The results of the Hydraulic Analysis can be found in **Appendix D**.

6.1 Proposed Stormwater Management – Pre vs. Post

The design observation points have been modeled in Hydro CAD and represent the total flow leaving the project drainage areas. Three different drainage points have been evaluated based on the proposed site development. The drainage analysis points are shown on the pre and post drainage area maps in **Appendix G.** The table below displays the peak discharge rates for the design points and demonstrates that discharge rates for post construction are less than or equal to what is currently produced at the design points.

Peak Flow Discharge Rate DP-1			
Storm Event	**Pre (cfs)**	**Post (cfs)**	**Net Reduction (cfs)**
1	1.4	0.1	**-1.3**
2	1.8	0.2	**-1.6**
10	2.9	0.5	**-2.4**
100	5.2	2.0	**-3.2**

Peak Flow Discharge Rate DP-2			
Storm Event	**Pre (cfs)**	**Post (cfs)**	**Net Reduction (cfs)**
1	0.6	0.0	**-0.6**
2	0.8	0.0	**-0.8**
10	1.3	0.1	**-1.3**
100	2.5	0.2	**-2.3**

Peak Flow Discharge Rate DP-3			
Storm Event	**Pre (cfs)**	**Post (cfs)**	**Net Reduction (cfs)**
1	0.0	0.0	**0.0**
2	0.0	0.0	**0.0**
10	0.0	0.2	**0.2**
100	0.0	1.1	**1.1**

Peak Flow Discharge Rate OVERALL			
Storm Event	**Pre (cfs)**	**Post (cfs)**	**Net Reduction (cfs)**
1	2.0	0.1	**-1.8**
2	2.6	0.2	**-2.4**
10	4.2	0.7	**-3.5**
100	7.6	3.2	**-4.4**

6.2 Hydraulic Grade Evaluation

The stormwater model has been developed to show the proposed storm system has the capacity to adequately convey stormwater runoff during large storm events. The hydraulic analysis for the 25 year storm event can be found in **Appendix H**. The model shows the peak water elevation does not exceed the elevations available in the storm system.

7.0 PERMANENT STORMWATER MANAGEMENT FEATURES

7.1 Conveyance Piping

Storm runoff from developed areas will be conveyed to and through the stormwater system by a series of underground piping and surface flows. Due to relatively small watershed areas associated with each catch basin, the SCS Unit Hydrograph TR-55/TR-20 Method and inlet capacities for circular pipes were used for pipe sizing. In general, piping is designed such that:

- All proposed piping is sized to accommodate the peak flow from the 25-year 24-hour storm, as prescribed by the local authority.
- Flow capacity is sufficient to convey runoff to the receiving discharge points.
- Strength is sufficient to withstand the soil cover and vehicle loads.
- In some instances, the existing site drainage system is not capable of conveying all of the runoff contributing to the drainage structure. The model shows that the basins fill and sheet flow overland to the next available drainage structure in large storm events. In no cases does the "surcharging" exceed 6 inches. In these locations the post condition has been improved to convey the flow or reduce the "surcharging".

7.2 Stormtech Underground Infiltration Chambers

Stormtech underground infiltrator units are designed to detain runoff and allow it to infiltrate into the existing site soils. Infiltrator chambers are ideal on sites with well-draining soils and limited open areas for open air vegetated practices. Infiltrator chambers provide storage within the chamber and within the voids that exist in the stone media surrounding the units.

- Flow capacity is sufficient to infiltrate into existing soils.
- Strength is sufficient to withstand the soil cover and vehicle loads.
- Isolator row is accessible via storm structure and 24" diameter conveyance piping.

APPENDIX A

Construction Site Log Book

STATE POLLUTANT DISCHARGE ELIMINATION SYSTEM
FOR CONSTRUCTION ACTIVITIES

CONSTRUCTION SITE LOG BOOK

Table of Contents

I. Pre-Construction Meeting Documents.

a. Preamble to Site Assessment and Inspections

b. Operator’s Certification

c. Qualified Professional's Credentials & Certification

d. Pre-Construction Site Assessment Checklist

a.

II. Construction Duration Inspections

a. Directions

b. Modification to the SWPPP

III. Monthly Summary Reports

IV. Monitoring, Reporting, and Three-Month Status Reports

a. Operator’s Compliance Response Form

a

Properly completing forms such as those contained in this document meet the inspection requirement of NYSDEC SPDES GP for Construction Activities. Completed forms shall be kept on site at all times and made available to authorities upon request.

I. PRE-CONSTRUCTION MEETING DOCUMENTS

Project Name _____

Permit No. _____**Date of Authorization**_____

Name of Operator _____

Prime Contractor _____

a. Preamble to Site Assessment and Inspections -The Following Information To Be Read By All Person's Involved in The Construction of Stormwater Related Activities:

The Operator agrees to have a qualified professional[1] conduct an assessment of the site prior to the commencement of construction[2] and certify in this inspection report that the appropriate erosion and sediment controls described in the SWPPP have been adequately installed or implemented to ensure overall preparedness of the site for the commencement of construction.

Prior to the commencement of construction, the Operator shall certify in this site logbook that the SWPPP has been prepared in accordance with the State's standards and meets all Federal, State and local erosion and sediment control requirements.

When construction starts, site inspections shall be conducted by the qualified professional at least every 7 calendar days and within 24 hours of the end of a storm event of 0.5 inches or greater (Construction Duration Inspections). The Operator shall maintain a record of all inspection reports in this site logbook. The site logbook shall be maintained on site and be made available to the permitting authorities upon request. The Operator shall post at the site, in a publicly accessible location, a summary of the site inspection activities on a monthly basis (Monthly Summary Report).

The operator shall also prepare a written summary of compliance with this general permit at a minimum frequency of every three months (Operator's Compliance Response Form), while coverage exists. The summary should address the status of achieving each component of the SWPPP.

Prior to filing the Notice of Termination or the end of permit term, the Operator shall have a qualified professional perform a final site inspection. The qualified professional shall certify that the site has undergone final stabilization[3] using either vegetative or structural stabilization methods and that all temporary erosion and sediment controls (such as silt fencing) not needed for long-term erosion control have been removed. In addition, the Operator must identify and certify that all permanent structures described in the SWPPP have been constructed and provide the owner(s) with an operation and maintenance plan that ensures the structure(s) continuously functions as designed.

1 "Qualified Professional means a person knowledgeable in the principles and practice of erosion and sediment controls, such as a Certified Professional in Erosion and Sediment Control (CPESC), soil scientist, licensed engineer or someone working under the direction and supervision of a licensed engineer (person must have experience in the principles and practices of erosion and sediment control).

2 "Commencement of construction" means the initial removal of vegetation and disturbance of soils associated with clearing, grading or excavating activities or other construction activities.

3 "Final stabilization" means that all soil-disturbing activities at the site have been completed and a uniform, perennial vegetative cover with a density of eighty (80) percent has been established or equivalent stabilization measures (such as the use of mulches or geotextiles) have been employed on all unpaved areas and areas not covered by permanent structures.

b. Operators Certification

"I certify under penalty of law that this document and all attachments were prepared under my direction or supervision in accordance with a system designed to assure that qualified personnel properly gathered and evaluated the information submitted. Based on my inquiry of the person or persons who manage the system, or those persons directly responsible for gathering the information, the information submitted is, to the best of my knowledge and belief, true, accurate, and complete. Further, I hereby certify that the SWPPP meets all Federal, State, and local erosion and sediment control requirements. I am aware that false statements made herein are punishable as a class A misdemeanor pursuant to Section 210.45 of the Penal Law. "

Name (please print):_____

Title _____**Date:**_____

Address: _____

Phone: _____ **Email:**_____

Signature:_____

c. Qualified Professional's Credentials & Certification

" I hereby certify that I meet the criteria set forth in the General Permit to conduct site inspections for this project and that the appropriate erosion and sediment controls described in the SWPPP and as described in the following Pre-construction Site Assessment Checklist have been adequately installed or implemented, ensuring the overall preparedness of this site for the commencement of construction."

Name (please print):_____

Title _____**Date:**_____

Address: _____

Phone: _____ **Email:**_____

Signature:_____

d. Pre-construction Site Assessment Checklist (NOTE: Provide comments below as necessary)

1. Notice of Intent, SWPPP, and Contractors Certification:

Yes No NA

[ ] [ ] [ ] Has a Notice of Intent been filed with the NYS Department of Conservation?
[ ] [ ] [ ] Is the SWPPP on-site? Where?_____
[ ] [ ] [ ] Is the Plan current? What is the latest revision date?_____
[ ] [ ] [ ] Is a copy of the NOI (with brief description) onsite? Where?_____
[ ] [ ] [ ] Have all contractors involved with stormwater related activities signed a contractor's certification?

Pre-construction Site Assessment Checklist (continued)

2. Resource Protection

Yes No NA

[ ] [ ] [ ] Are construction limits clearly flagged or fenced?

[ ] [ ] [ ] Important trees and associated rooting zones, on-site septic system absorption fields, existing vegetated areas suitable for filter strips, especially in perimeter areas, have been flagged for protection.

[ ] [ ] [ ] Creek crossings installed prior to land-disturbing activity, including clearing and blasting.

3. Surface Water Protection

Yes No NA

[ ] [ ] [ ] Clean stormwater runoff has been diverted from areas to be disturbed.

[ ] [ ] [ ] Bodies of water located either on site or in the vicinity of the site have been identified and protected.

[ ] [ ] [ ] Appropriate practices to protect on-site or downstream surface water are installed.

[ ] [ ] [ ] Are clearing and grading operations divided into areas <5 acres?

4. Stabilized Construction Entrance

Yes No NA

[ ] [ ] [ ] A temporary construction entrance to capture mud and debris from construction vehicles before they enter the public highway has been installed.

[ ] [ ] [ ] Other access areas (entrances, construction routes, equipment parking areas) are stabilized immediately as work takes place with gravel or other cover.

[ ] [ ] [ ] Sediment tracked onto public streets is removed or cleaned on a regular basis.

5. Perimeter Sediment Controls

Yes No NA

[ ] [ ] [ ] Silt fence material and installation comply with the standard drawing and specifications.

[ ] [ ] [ ] Silt fences are installed at appropriate spacing intervals

[ ] [ ] [ ] Sediment/detention basin was installed as first land disturbing activity.

[ ] [ ] [ ] Sediment traps and barriers are installed.

6. Pollution Prevention for Waste and Hazardous Materials

Yes No NA

[ ] [ ] [ ] The Operator or designated representative has been assigned to implement the spill prevention avoidance and response plan.

[ ] [ ] [ ] The plan is contained in the SWPPP on page _____

[ ] [ ] [ ] Appropriate materials to control spills are onsite. Where? _____

II. CONSTRUCTION DURATION INSPECTIONS

a. Directions:
Inspection Forms will be filled out during the entire construction phase of the project.
Required Elements:

(1) On a site map, indicate the extent of all disturbed site areas and drainage pathways. Indicate site areas that are expected to undergo initial disturbance or significant site work within the next 14-day period;

(2) Indicate on a site map all areas of the site that have undergone temporary or permanent stabilization;

(3) Indicate all disturbed site areas that have not undergone active site work during the previous 14-day period;

Inspect all sediment control practices and record the approximate degree of sediment accumulation as a percentage of sediment storage volume (for example, 10 percent, 20 percent, 50 percent);

(5) Inspect all erosion and sediment control practices and record all maintenance requirements such as verifying the integrity of barrier or diversion systems (earthen berms or silt fencing) and containment systems (sediment basins and sediment traps). Identify any evidence of rill or gully erosion occurring on slopes and any loss of stabilizing vegetation or seeding/mulching. Document any excessive deposition of sediment or ponding water along barrier or diversion systems. Record the depth of sediment within containment structures, any erosion near outlet and overflow structures, and verify the ability of rock filters around perforated riser pipes to pass water; and

(6) Immediately report to the Operator any deficiencies that are identified with the implementation of the SWPPP.

SITE PLAN/SKETCH

Inspector (print name)	**Date of Inspection**
Qualified Professional (print name)	**Qualified Professional Signature**

The above signed acknowledges that, to the best of his/her knowledge, all information provided on the forms is accurate and complete.

Maintaining Water Quality

Yes No NA

[ ] [ ] [ ] Is there an increase in turbidity causing a substantial visible contrast to natural conditions?
[ ] [ ] [ ] Is there residue from oil and floating substances, visible oil film, or globules or grease?
[ ] [ ] [ ] All disturbance is within the limits of the approved plans.
[ ] [ ] [ ] Have receiving lake/bay, stream, and/or wetland been impacted by silt from project?

Housekeeping

1. General Site Conditions

Yes No NA

[ ] [ ] [ ] Is construction site litter and debris appropriately managed?
[ ] [ ] [ ] Are facilities and equipment necessary for implementation of erosion and sediment control in working order and/or properly maintained?
[ ] [ ] [ ] Is construction impacting the adjacent property?
[ ] [ ] [ ] Is dust adequately controlled?

2. Temporary Stream Crossing

Yes No NA

[ ] [ ] [ ] Maximum diameter pipes necessary to span creek without dredging are installed.
[ ] [ ] [ ] Installed non-woven geotextile fabric beneath approaches.
[ ] [ ] [ ] Is fill composed of aggregate (no earth or soil)?
[ ] [ ] [ ] Rock on approaches is clean enough to remove mud from vehicles & prevent sediment from entering stream during high flow.

Runoff Control Practices

1. Excavation Dewatering

Yes No NA

[ ] [ ] [ ] Upstream and downstream berms (sandbags, inflatable dams, etc.) are installed per plan.
[ ] [ ] [ ] Clean water from upstream pool is being pumped to the downstream pool.
[ ] [ ] [ ] Sediment laden water from work area is being discharged to a silt-trapping device.
[ ] [ ] [ ] Constructed upstream berm with one-foot minimum freeboard.

2. Level Spreader

Yes No NA

[ ] [ ] [ ] Installed per plan.
[ ] [ ] [ ] Constructed on undisturbed soil, not on fill, receiving only clear, non-sediment laden flow.
[ ] [ ] [ ] Flow sheets out of level spreader without erosion on downstream edge.

3. Interceptor Dikes and Swales

Yes No NA

[ ] [ ] [ ] Installed per plan with minimum side slopes 2H:1V or flatter.
[ ] [ ] [ ] Stabilized by geotextile fabric, seed, or mulch with no erosion occurring.
[ ] [ ] [ ] Sediment-laden runoff directed to sediment trapping structure

Runoff Control Practices (continued)

4. Stone Check Dam

Yes No NA

[ ] [ ] [ ] Is channel stable? (flow is not eroding soil underneath or around the structure).
[ ] [ ] [ ] Check is in good condition (rocks in place and no permanent pools behind the structure).
[ ] [ ] [ ] Has accumulated sediment been removed?.

5. Rock Outlet Protection

Yes No NA

[ ] [ ] [ ] Installed per plan.
[ ] [ ] [ ] Installed concurrently with pipe installation.

Soil Stabilization

1. Topsoil and Spoil Stockpiles

Yes No NA

[ ] [ ] [ ] Stockpiles are stabilized with vegetation and/or mulch.
[ ] [ ] [ ] Sediment control is installed at the toe of the slope.

2. Revegetation

Yes No NA

[ ] [ ] [ ] Temporary seedings and mulch have been applied to idle areas.
[ ] [ ] [ ] 4 inches minimum of topsoil has been applied under permanent seedings

Sediment Control

1. Stabilized Construction Entrance

Yes No NA

[ ] [ ] [ ] Stone is clean enough to effectively remove mud from vehicles.
[ ] [ ] [ ] Installed per standards and specifications?
[ ] [ ] [ ] Does all traffic use the stabilized entrance to enter and leave site?
[ ] [ ] [ ] Is adequate drainage provided to prevent ponding at entrance?

2. Silt Fence

Yes No NA

[ ] [ ] [ ] Installed on Contour, 10 feet from toe of slope (not across conveyance channels).
[ ] [ ] [ ] Joints constructed by wrapping the two ends together for continuous support.
[ ] [ ] [ ] Fabric buried 6 inches minimum.
[ ] [ ] [ ] Posts are stable, fabric is tight and without rips or frayed areas.

Sediment accumulation is ___% of design capacity.

Sediment Control (continued)

3. Storm Drain Inlet Protection (Use for Stone & Block; Filter Fabric; Curb; or, Excavated practices)

Yes No NA

[ ] [ ] [ ] Installed concrete blocks lengthwise so open ends face outward, not upward.
[ ] [ ] [ ] Placed wire screen between No. 3 crushed stone and concrete blocks.
[ ] [ ] [ ] Drainage area is 1acre or less.
[ ] [ ] [ ] Excavated area is 900 cubic feet.
[ ] [ ] [ ] Excavated side slopes should be 2:1.
[ ] [ ] [ ] 2" x 4" frame is constructed and structurally sound.
[ ] [ ] [ ] Posts 3-foot maximum spacing between posts.
[ ] [ ] [ ] Fabric is embedded 1 to 1.5 feet below ground and secured to frame/posts with staples at max 8-inch spacing.
[ ] [ ] [ ] Posts are stable, fabric is tight and without rips or frayed areas.

Sediment accumulation ___% of design capacity.

4. Temporary Sediment Trap

Yes No NA

[ ] [ ] [ ] Outlet structure is constructed per the approved plan or drawing.
[ ] [ ] [ ] Geotextile fabric has been placed beneath rock fill.

Sediment accumulation is ___% of design capacity.

5. Temporary Sediment Basin

Yes No NA

[ ] [ ] [ ] Basin and outlet structure constructed per the approved plan.
[ ] [ ] [ ] Basin side slopes are stabilized with seed/mulch.
[ ] [ ] [ ] Drainage structure flushed and basin surface restored upon removal of sediment basin facility.

Sediment accumulation is ___% of design capacity.

Note: Not all erosion and sediment control practices are included in this listing. Add additional pages to this list as required by site specific design.
Construction inspection checklists for post-development stormwater management practices can be found in Appendix F of the New York Stormwater Management Design Manual.

CONSTRUCTION DURATION INSPECTIONS
b. Modifications to the SWPPP (To be completed as described below)

The Operator shall amend the SWPPP whenever:
1. There is a significant change in design, construction, operation, or maintenance which may have a significant effect on the potential for the discharge of pollutants to the waters of the United States and which has not otherwise been addressed in the SWPPP; or
2. The SWPPP proves to be ineffective in:
a. Eliminating or significantly minimizing pollutants from sources identified in the SWPPP and as required by this permit; or
b. Achieving the general objectives of controlling pollutants in stormwater discharges from permitted construction activity; and
3. Additionally, the SWPPP shall be amended to identify any new contractor or subcontractor that will implement any measure of the SWPPP.

Modification & Reason:

III. Monthly Summary of Site Inspection Activities

Name of Permitted Facility:	Today's Date:	Reporting Month:
Location:	Permit Identification #:	
Name and Telephone Number of Site Inspector:		

Date of Inspection	Regular / Rainfall based Inspection	Name of Inspector	Items of Concern

Owner/Operator Certification:

"I certify under penalty of law that this document and all attachments were prepared under my direction or supervision in accordance with a system designed to assure that qualified personnel properly gathered and evaluated the information submitted. Based on my inquiry of the person or persons who manage the system, or those persons directly responsible for gathering the information, the information submitted is, to the best of my knowledge and belief, true, accurate, and complete. I am aware that false statements made herein are punishable as a class A misdemeanor pursuant to Section 210.45 of the Penal Law."

_____ _____

Signature of Permittee or Duly Authorized Representative Name of Permittee or Duly Authorized Representative date

Duly authorized representatives must have written authorization, submitted to DEC, to sign any permit documents.

APPENDIX B

Owner/Developer and Contactor Certification Forms

OWNER CERTIFICATION

I certify, under penalty of law that this document and all attachments were prepared under my direction or supervision in accordance with a system designed to assure that qualified personnel properly gathered and evaluated the information submitted. Based on my inquiry of the person or persons who manage the system, or those persons directly responsible for gathering the information, the information submitted is, to the best of my knowledge and belief, true, accurate and complete. I am aware that false statements made herein are punishable is a class A misdemeanor pursuant to Section 210.45 of the Penal Law.

_____	_____	_____
Owner/Permtitee Signature	Title	Date

CONTRACTOR CERTIFICATION

"I certify, under penalty of law that I understand and agree to comply with the terms and conditions of the SWPPP as a condition of authorization to discharge stormwater. I also understand that the operator must comply with the terms and conditions of the New York State Pollutant Discharge Elimination System ("SPDES") general permit for stormwater discharges from construction activities and that it is unlawful for any persons to cause r contribute to a violation of water quality standards."

_____	_____	_____
Contractor Signature	Title	Date
_____	_____	_____
Contractor Signature	Title	Date
_____	_____	_____
Contractor Signature	Title	Date
_____	_____	_____
Contractor Signature	Title	Date

APPENDIX C

Pre/Duration Construction Maintenance Inspection Checklist (NYSDEC Sample)

SC-310/SC-740/DC-780

StormTech®
Detention • Retention • Water Quality
A division of ADS

StormTech Construction Guide

REQUIRED MATERIALS AND EQUIPMENT LIST

- Acceptable fill materials per **Table 1**
- Woven and non-woven geotextiles
- StormTech solid end caps and pre-cored end caps
- StormTech chambers
- StormTech manifolds and fittings

IMPORTANT NOTES:

A. This installation guide provides the minimum requirements for proper installation of chambers. Non-adherence to this guide may result in damage to chambers during installation. Replacement of damaged chambers during or after backfilling is costly and very time consuming. It is recommended that all installers are familiar with this guide, and that the contractor inspects the chambers for distortion, damage and joint integrity as work progresses.

B. Use of a dozer to push embedment stone between the rows of chambers may cause damage to chambers and is not an acceptable backfill method. Any chambers damaged by using the "dump and push" method are not covered under the StormTech standard warranty.

C. Care should be taken in the handling of chambers and end caps. Avoid dropping, prying or excessive force on chambers during removal from pallet and initial placement.

Requirements for System Installation



Excavate bed and prepare subgrade per engineer's plans.



Place non-woven geotextile over prepared soils and up excavation walls.



Place clean, crushed, angular stone foundation 6" (150 mm) min. Install underdrains if required. Compact to achieve a flat surface.

Manifold, Scour Fabric and Chamber Assembly



Install manifolds and lay out woven scour geotextile at inlet rows [min. 12.5 ft (3.8 m)] at each inlet end cap. Place a continuous piece (no seams, double layer) along entire length of Isolator® Row(s).

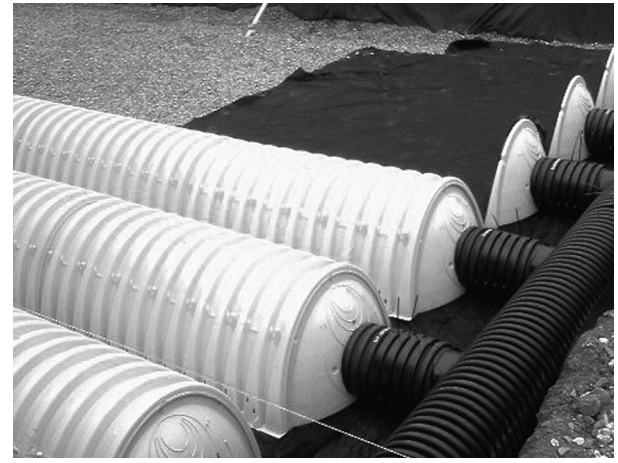

Align the first chamber and end cap of each row with inlet pipes. Contractor may choose to postpone stone placement around end chambers and leave ends of rows open for easy inspection of chambers during the backfill process.



Construct the chamber bed by overlapping the chambers lengthwise in rows. Attach chambers by overlapping the end corrugation of one chamber on to the end corrugation of the last chamber in the row. Be sure that the chamber placement does not exceed the reach of the construction equipment used to place the stone.

Attaching the End Caps

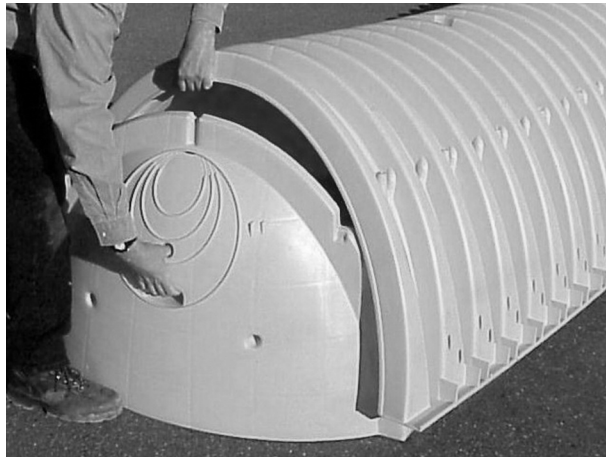

Lift the end of the chamber a few inches off the ground. With the curved face of the end cap facing outward, place the end cap into the chamber's end corrugation.

Prefabricated End Caps



24" (600 mm) inlets are the maximum size that can fit into a SC-740/DC-780 end cap and must be prefabricated with a 24" (600 mm) pipe stub. SC-310 chambers with a 12" (300 mm) inlet pipe must use a prefabricated end cap with a 12" (300 mm) pipe stub.

Isolator Row



Drape a strip of ADS non-woven geotextile over the row of chambers (not required over DC-780). This is the same type of non-woven geotextile used as a separation layer around the angular stone of the StormTech system.

Initial Anchoring of Chambers – Embedment Stone





Initial embedment shall be spotted along the centerline of the chamber evenly anchoring the lower portion of the chamber. This is best accomplished with a stone conveyor or excavator reaching along the row.





No equipment shall be operated on the bed at this stage of the installation. Excavators must be located off the bed. Dump trucks shall not dump stone directly on to the bed. Dozers or loaders are not allowed on the bed at this time.

Backfill of Chambers – Embedment Stone

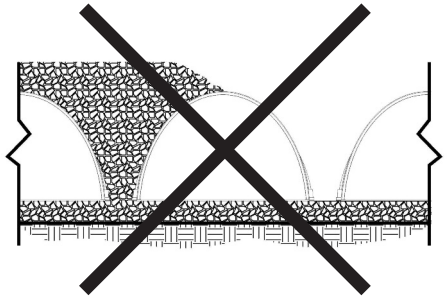

UNEVEN BACKFILL

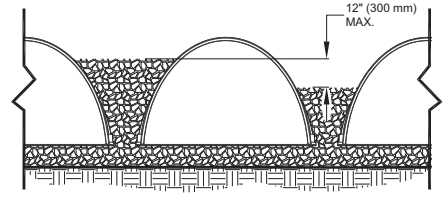

EVEN BACKFILL

Backfill chambers evenly. Stone column height should never differ by more than 12” (300 mm) between adjacent chamber rows or between chamber rows and perimeter.

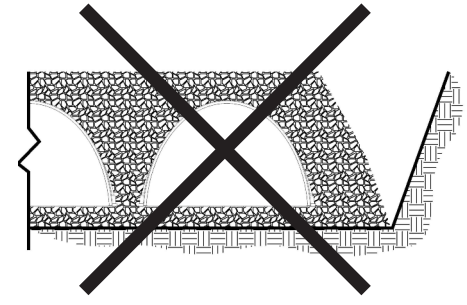

PERIMETER NOT BACKFILLED

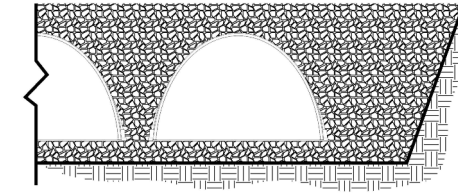

PERIMETER FULLY BACKFILLED

Perimeter stone must be brought up evenly with chamber rows. Perimeter must be fully backfilled, with stone extended horizontally to the excavation wall.

Backfill of Chambers – Embedment Stone and Cover Stone



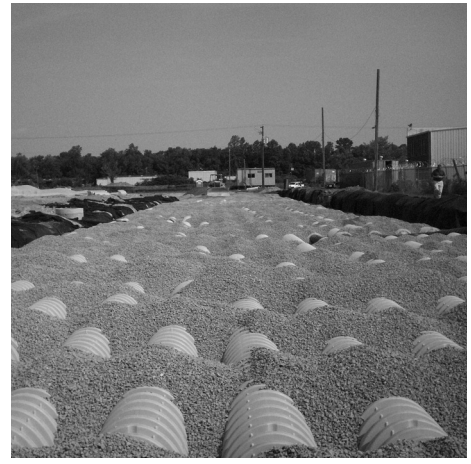

Continue evenly backfilling between rows and around perimeter until embedment stone reaches tops of chambers. Perimeter stone must extend horizontally to the excavation wall for both straight or sloped sidewalls. **Only after chambers have been backfilled to top of chamber and with a minimum 6" (150 mm) of cover stone on top of chambers can small dozers be used over the chambers for backfilling remaining cover stone.**





Small dozers and skid loaders may be used to finish grading stone backfill in accordance with ground pressure limits in Table 2. They must push material parallel to rows only. Never push perpendicular to rows. StormTech recommends that the contractor inspect chambers before placing final backfill. Any chambers damaged by construction shall be removed & replaced.

Final Backfill of Chambers – Fill Material



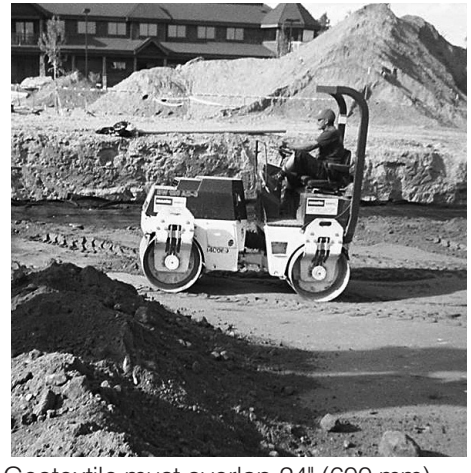

Install non-woven geotextile over stone. Geotextile must overlap 24" (600 mm) min. where edges meet. Compact each lift of backfill as specified in the site design engineer's drawings. Roller travel parallel with rows.

StormTech Isolator Row Detail

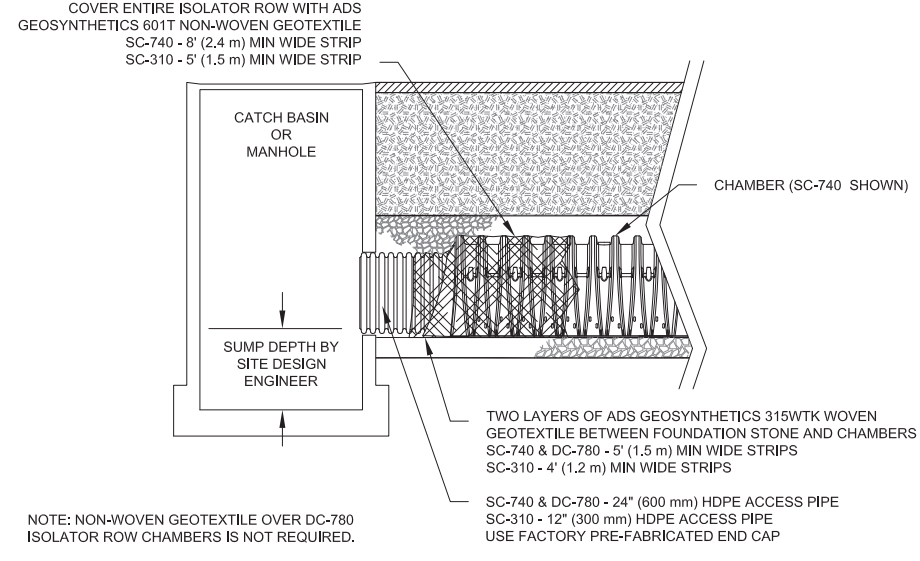

Table 1 – Acceptable Fill Materials

Material Location	Description	AASHTO M43 Designation[1]	Compaction/Density Requirement
Ⓓ **Final Fill:** Fill Material for layer 'D' starts from the top of the 'C' layer to the bottom of flexible pavement or unpaved finished grade above. Note that the pavement subbase may be part of the 'D' layer.	Any soil/rock materials, native soils or per engineer's plans. Check plans for pavement subgrade requirements.	N/A	Prepare per site design engineer's plans. Paved installations may have stringent material and preparation requirements.
Ⓒ **Initial Fill:** Fill Material for layer 'C' starts from the top of the embedment stone ('B' layer) to 18" (450 mm) above the top of the chamber. Note that pavement subbase may be part of the 'C' layer.	Granular well-graded soil/aggregate mixtures, <35% fines or processed aggregate. Most pavement subbase materials can be used in lieu of this layer.	AASHTO M45 A-1, A-2-4, A-3 or AASHTO M43[1] 3, 357, 4, 467, 5, 56, 57, 6, 67, 68, 7, 78, 8, 89, 9, 10	Begin compaction after min. 12" (300 mm) of material over the chambers is reached. Compact additional layers in 6" (150 mm) max. lifts to a min. 95% Proctor density for well-graded material and 95% relative density for processed aggregate materials. Roller gross vehicle weight not to exceed 12,000 lbs (53 kN). Dynamic force not to exceed 20,000 lbs (89 kN)
Ⓑ **Embedment Stone:** Embedment Stone surrounding chambers from the foundation stone to the 'C' layer above.	Clean, crushed, angular stone nominal size distribution 3/4 - 2" (20 mm - 50 mm)	AASHTO M43[1] 3, 357, 4, 467, 5, 56, 57	No compaction required.
Ⓐ **Foundation Stone:** Foundation Stone below the chambers from the subgrade up to the foot (bottom) of the chamber.	Clean, crushed, angular stone, nominal size distribution 3/4 - 2" (20 mm - 50 mm)	AASHTO M43[1] 3, 357, 4, 467, 5, 56, 57	Place and compact in 6" (150 mm) lifts using two full coverages with a vibratory compactor.[2, 3]

PLEASE NOTE:

1. ***The listed AASHTO designations are for gradations only. The stone must also be clean, crushed, angular. For example, a specification for #4 stone would state: "clean, crushed, angular no. 4 (AASHTO M43) stone".***
2. ***StormTech compaction requirements are met for 'A' location materials when placed and compacted in 6" (150 mm) (max) lifts using two full coverages with a vibratory compactor.***
3. ***Where infiltration surfaces may be comprised by compaction, for standard installations and standard design load conditions, a flat surface may be achieved by raking or dragging without compaction equipment. For special load designs, contact StormTech for compaction requirements.***

Figure 1 – Inspection Port Detail

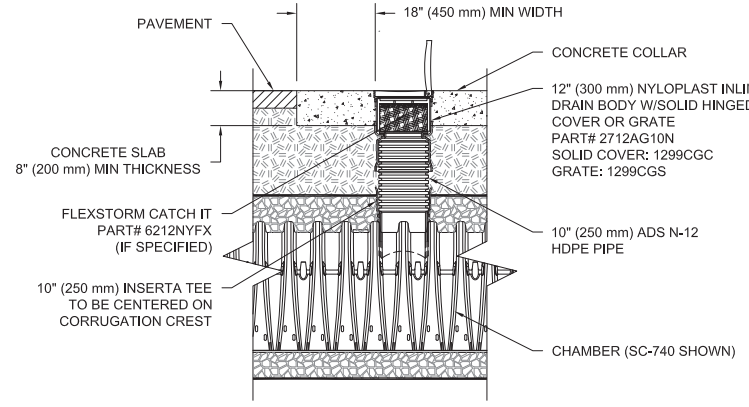

Figure 2 – Fill Material Locations

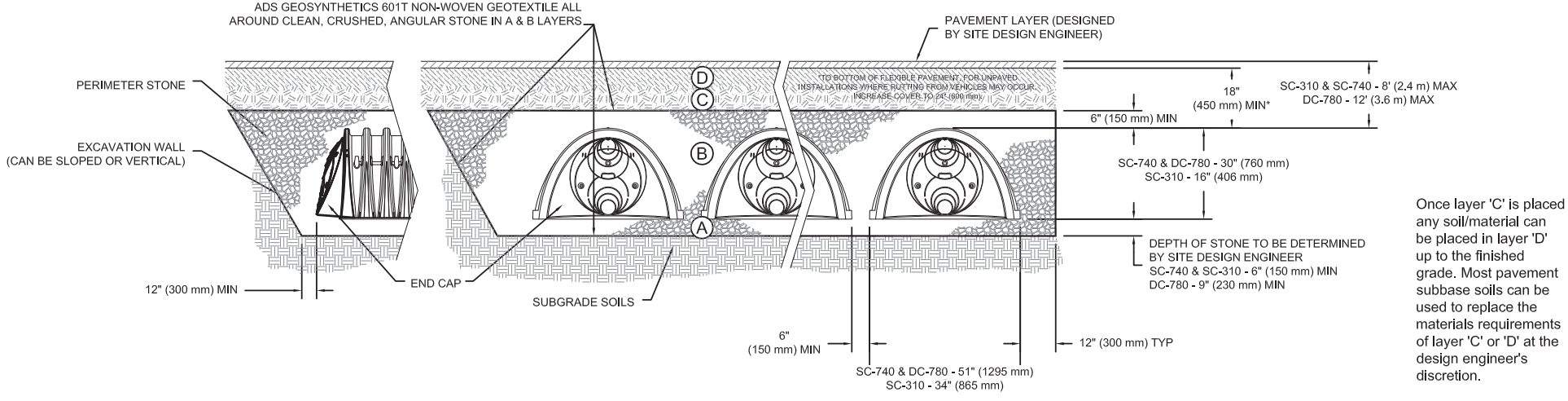

Once layer 'C' is placed any soil/material can be placed in layer 'D' up to the finished grade. Most pavement subbase soils can be used to replace the materials requirements of layer 'C' or 'D' at the design engineer's discretion.

NOTES:

1. *36" (900 mm) of stabilized cover materials over the chambers is required for full dump truck travel and dumping.*
2. *During paving operations, dump truck axle loads on 18" (450 mm) of cover may be necessary. Precautions should be taken to avoid rutting of the road base layer, to ensure that compaction requirements have been met, and that a minimum of 18" (450 mm) of cover exists over the chambers. Contact StormTech for additional guidance on allowable axle loads during paving.*
3. *Ground pressure for track dozers is the vehicle operating weight divided by total ground contact area for both tracks. Excavators will exert higher ground pressures based on loaded bucket weight and boom extension.*
4. *Mini-excavators (< 8,000lbs/3,628 kg) can be used with at least 12" (300 mm) of stone over the chambers and are limited by the maximum ground pressures in Table 2 based on a full bucket at maximum boom extension.*
5. *Storage of materials such as construction materials, equipment, spoils, etc. should not be located over the StormTech system. The use of equipment over the StormTech system not covered in Table 2 (ex. soil mixing equipment, cranes, etc) is limited. Please contact StormTech for more information.*
6. *Allowable track loads based on vehicle travel only. Excavators shall not operate on chamber beds until the total backfill reaches 3 feet (900 mm) over the entire bed.*

Table 2 – Maximum Allowable Construction Vehicle Loads[5]

Material Location	Fill Depth over Chambers in. [mm]	Maximum Allowable Wheel Loads		Maximum Allowable Track Loads[6]		Maximum Allowable Roller Loads
		Max Axle Load for Trucks lbs [kN]	Max Wheel Load for Loaders lbs [kN]	Track Width in. [mm]	Max Ground Pressure psf [kPa]	Max Drum Weight or Dynamic Force lbs [kN]
(D) Final Fill Material	36" [900] Compacted	32,000 [142]	16,000 [71]	12" [305] 18" [457] 24" [610] 30" [762] 36" [914]	3420 [164] 2350 [113] 1850 [89] 1510 [72] 1310 [63]	38,000 [169]
(C) Initial Fill Material	24" [600] Compacted	32,000 [142]	16,000 [71]	12" [305] 18" [457] 24" [610] 30" [762] 36" [914]	2480 [119] 1770 [85] 1430 [68] 1210 [58] 1070 [51]	20,000 [89]
	24" [600] Loose/Dumped	32,000 [142]	16,000 [71]	12" [305] 18" [457] 24" [610] 30" [762] 36" [914]	2245 [107] 1625 [78] 1325 [63] 1135 [54] 1010 [48]	20,000 [89] Roller gross vehicle weight not to exceed 12,000 lbs. [53 kN]
	18" [450]	32,000 [142]	16,000 [71]	12" [305] 18" [457] 24" [610] 30" [762] 36" [914]	2010 [96] 1480 [71] 1220 [58] 1060 [51] 950 [45]	20,000 [89] Roller gross vehicle weight not to exceed 12,000 lbs. [53 kN]
(B) Embedment Stone	12" [300]	16,000 [71]	NOT ALLOWED	12" [305] 18" [457] 24" [610] 30" [762] 36" [914]	1540 [74] 1190 [57] 1010 [48] 910 [43] 840 [40]	20,000 [89] Roller gross vehicle weight not to exceed 12,000 lbs. [53 kN]
	6" [150]	8,000 [35]	NOT ALLOWED	12" [305] 18" [457] 24" [610] 30" [762] 36" [914]	1070 [51] 900 [43] 800 [38] 760 [36] 720 [34]	NOT ALLOWED

Table 3 – Placement Methods and Descriptions

Material Location	Placement Methods/ Restrictions	Wheel Load Restrictions	Track Load Restrictions	Roller Load Restrictions
		See Table 2 for Maximum Construction Loads		
(D) Final Fill Material	A variety of placement methods may be used. All construction loads must not exceed the maximum limits in Table 2.	36" (900 mm) minimum cover required for dump trucks to dump over chambers.	Dozers to push parallel to rows until 36" (900mm) compacted cover is reached.[4]	Roller travel parallel to rows only until 36" (900 mm) compacted cover is reached.
(C) Initial Fill Material	Excavator positioned off bed recommended. Small excavator allowed over chambers. Small dozer allowed.	Asphalt can be dumped into paver when compacted pavement subbase reaches 18" (450 mm) above top of chambers.	Small LGP track dozers & skid loaders allowed to grade cover stone with at least 6" (150 mm) stone under tracks at all times. Equipment must push parallel to rows at all times.	Use dynamic force of roller only after compacted fill depth reaches 12" (300 mm) over chambers. Roller travel parallel to chamber rows only.
(B) Embedment Stone	No equipment allowed on bare chambers. Use excavator or stone conveyor positioned off bed or on foundation stone to evenly fill around all chambers to at least the top of chambers.	No wheel loads allowed. Material must be placed outside the limits of the chamber bed.	No tracked equipment is allowed on chambers until a min. 6" (150 mm) cover stone is in place.	No rollers allowed.
(A) Foundation Stone	No StormTech restrictions. Contractor responsible for any conditions or requirements by others relative to subgrade bearing capacity, dewatering or protection of subgrade.			

ADS "Terms and Conditions of Sale" are available on the ADS website, www.ads-pipe.com.
Advanced Drainage Systems, the ADS logo, and the green stripe are registered trademarks of Advanced Drainage Systems.
StormTech® and the Isolator® Row are registered trademarks of StormTech, Inc
#090113 09/13

©2013 Advanced Drainage Systems, Inc.

85 Civic Center Plaza, Suite 204
Poughkeepsie, NY 12601
Phone: (845) 243-2880
Fax: (845) 265-8175

Drywell Inspection Checklist

Location:	
Site Status:	
Date:	
Time:	
Inspector:	

1. MONTHLY MAINTENANCE		
Maintenance Item	**Satisfactory / Unsatisfactory**	**Comments**
Inflow pipe clear of debris		
Outflow pipe clear of debris		
Contributory drainage area clear of debris		
No evidence of erosion within contributory drainage area		
Drywell drains between storms		
2. ANNUAL MAINTENANCE		
Maintenance Item	**Satisfactory / Unsatisfactory**	**Comments**
Greater than 25% of storage volume remaining		
Sediment accumulation requires cleanout		
Drywell in good structural condition		

Comments:

Actions to be Taken:

APPENDIX D

Soil Map, Rainfall Data, Stormwater Calcs, Soil Test Data

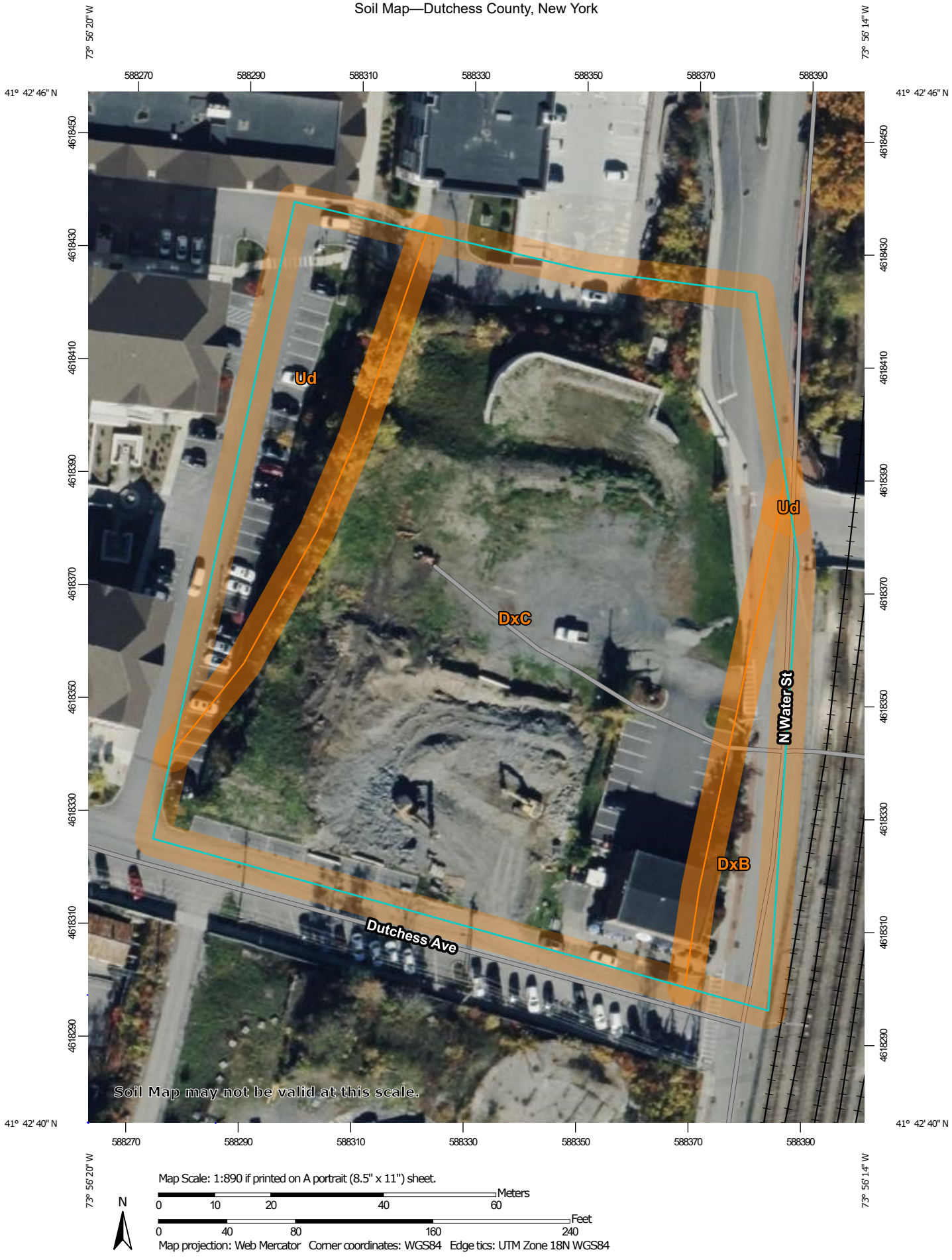

Map Scale: 1:890 if printed on A portrait (8.5" x 11") sheet.

N

Meters
0 10 20 40 60

Feet
0 40 80 160 240

Map projection: Web Mercator Corner coordinates: WGS84 Edge tics: UTM Zone 18N WGS84

MAP LEGEND

Area of Interest (AOI)

- Area of Interest (AOI)

Soils

- Soil Map Unit Polygons
- Soil Map Unit Lines
- Soil Map Unit Points

Special Point Features

- Blowout
- Borrow Pit
- Clay Spot
- Closed Depression
- Gravel Pit
- Gravelly Spot
- Landfill
- Lava Flow
- Marsh or swamp
- Mine or Quarry
- Miscellaneous Water
- Perennial Water
- Rock Outcrop
- Saline Spot
- Sandy Spot
- Severely Eroded Spot
- Sinkhole
- Slide or Slip
- Sodic Spot
- Spoil Area
- Stony Spot
- Very Stony Spot
- Wet Spot
- Other
- Special Line Features

Water Features

- Streams and Canals

Transportation

- Rails
- Interstate Highways
- US Routes
- Major Roads
- Local Roads

Background

- Aerial Photography

MAP INFORMATION

The soil surveys that comprise your AOI were mapped at 1:24,000.

Warning: Soil Map may not be valid at this scale.

Enlargement of maps beyond the scale of mapping can cause misunderstanding of the detail of mapping and accuracy of soil line placement. The maps do not show the small areas of contrasting soils that could have been shown at a more detailed scale.

Please rely on the bar scale on each map sheet for map measurements.

Source of Map: Natural Resources Conservation Service
Web Soil Survey URL:
Coordinate System: Web Mercator (EPSG:3857)

Maps from the Web Soil Survey are based on the Web Mercator projection, which preserves direction and shape but distorts distance and area. A projection that preserves area, such as the Albers equal-area conic projection, should be used if more accurate calculations of distance or area are required.

This product is generated from the USDA-NRCS certified data as of the version date(s) listed below.

Soil Survey Area: Dutchess County, New York
Survey Area Data: Version 21, Aug 29, 2024

Soil map units are labeled (as space allows) for map scales 1:50,000 or larger.

Date(s) aerial images were photographed: Oct 21, 2022—Oct 27, 2022

The orthophoto or other base map on which the soil lines were compiled and digitized probably differs from the background imagery displayed on these maps. As a result, some minor shifting of map unit boundaries may be evident.

Map Unit Legend

Map Unit Symbol	Map Unit Name	Acres in AOI	Percent of AOI
DxB	Dutchess-Cardigan-Urban land complex, undulating, rocky	0.2	7.1%
DxC	Dutchess-Cardigan-Urban land complex, rolling, rocky	2.4	79.8%
Ud	Udorthents, smoothed	0.4	13.1%
Totals for Area of Interest		**3.0**	**100.0%**

Extreme Precipitation Tables

Northeast Regional Climate Center

Data represents point estimates calculated from partial duration series. All precipitation amounts are displayed in inches.

Metadata for Point	
Smoothing	Yes
State	
Location	
Latitude	41.712 degrees North
Longitude	73.938 degrees West
Elevation	10 feet
Date/Time	Wed Jul 09 2025 11:04:00 GMT-0400 (Eastern Daylight Time)

Extreme Precipitation Estimates

	5min	10min	15min	30min	60min	120min		1hr	2hr	3hr	6hr	12hr	24hr	48hr		1day	2day	4day	7day	10day	
1yr	0.31	0.48	0.60	0.79	0.98	1.22	**1yr**	0.85	1.15	1.40	1.73	2.13	2.61	2.96	**1yr**	2.31	2.85	3.32	3.97	4.58	**1yr**
2yr	0.38	0.58	0.72	0.95	1.20	1.50	**2yr**	1.03	1.38	1.72	2.11	2.59	3.16	3.57	**2yr**	2.80	3.43	3.92	4.62	5.25	**2yr**
5yr	0.45	0.70	0.87	1.17	1.50	1.89	**5yr**	1.29	1.71	2.17	2.67	3.26	3.95	4.50	**5yr**	3.50	4.33	4.95	5.72	6.47	**5yr**
10yr	0.51	0.80	1.01	1.37	1.78	2.25	**10yr**	1.53	2.01	2.60	3.19	3.88	4.68	5.37	**10yr**	4.14	5.17	5.91	6.72	7.59	**10yr**
25yr	0.60	0.95	1.21	1.67	2.23	2.85	**25yr**	1.92	2.49	3.29	4.05	4.90	5.85	6.79	**25yr**	5.18	6.53	7.47	8.32	9.36	**25yr**
50yr	0.68	1.10	1.40	1.97	2.64	3.40	**50yr**	2.28	2.93	3.94	4.83	5.82	6.94	8.12	**50yr**	6.14	7.81	8.93	9.78	10.98	**50yr**
100yr	0.78	1.27	1.63	2.31	3.15	4.07	**100yr**	2.72	3.45	4.72	5.78	6.94	8.22	9.70	**100yr**	7.28	9.33	10.68	11.51	12.88	**100yr**
200yr	0.90	1.46	1.89	2.72	3.75	4.87	**200yr**	3.24	4.07	5.65	6.92	8.28	9.75	11.60	**200yr**	8.63	11.16	12.78	13.54	15.12	**200yr**
500yr	1.09	1.79	2.34	3.39	4.74	6.18	**500yr**	4.09	5.05	7.18	8.76	10.44	12.23	14.71	**500yr**	10.82	14.15	16.22	16.81	18.70	**500yr**

Lower Confidence Limits

	5min	10min	15min	30min	60min	120min		1hr	2hr	3hr	6hr	12hr	24hr	48hr		1day	2day	4day	7day	10day	
1yr	0.28	0.43	0.52	0.70	0.86	1.03	**1yr**	0.74	1.00	1.20	1.52	1.90	2.33	2.57	**1yr**	2.07	2.47	3.05	3.61	4.07	**1yr**
2yr	0.37	0.56	0.69	0.94	1.16	1.36	**2yr**	1.00	1.33	1.54	1.97	2.49	3.05	3.46	**2yr**	2.70	3.33	3.81	4.56	5.18	**2yr**
5yr	0.41	0.64	0.79	1.08	1.38	1.59	**5yr**	1.19	1.55	1.79	2.31	2.88	3.67	4.15	**5yr**	3.24	3.99	4.68	5.41	6.13	**5yr**
10yr	0.46	0.71	0.88	1.23	1.58	1.78	**10yr**	1.37	1.74	2.01	2.58	3.20	4.18	4.75	**10yr**	3.70	4.57	5.39	6.13	6.95	**10yr**
25yr	0.53	0.81	1.01	1.44	1.90	2.04	**25yr**	1.64	2.00	2.32	2.86	3.66	4.98	5.67	**25yr**	4.41	5.46	6.48	7.25	8.21	**25yr**
50yr	0.60	0.91	1.14	1.64	2.20	2.26	**50yr**	1.90	2.21	2.61	3.17	4.07	5.70	6.50	**50yr**	5.04	6.25	7.41	8.22	9.32	**50yr**
100yr	0.68	1.03	1.29	1.86	2.56	2.53	**100yr**	2.21	2.47	2.94	3.51	4.54	6.53	7.44	**100yr**	5.78	7.15	8.50	9.33	10.58	**100yr**
200yr	0.78	1.17	1.48	2.15	2.99	2.81	**200yr**	2.58	2.75	3.30	3.90	5.05	7.47	8.53	**200yr**	6.61	8.20	9.72	10.60	12.01	**200yr**
500yr	0.94	1.39	1.79	2.61	3.71	3.25	**500yr**	3.20	3.18	3.87	4.48	5.83	8.97	10.24	**500yr**	7.94	9.85	11.63	12.55	14.22	**500yr**

Upper Confidence Limits

	5min	10min	15min	30min	60min	120min		1hr	2hr	3hr	6hr	12hr	24hr	48hr		1day	2day	4day	7day	10day	
1yr	0.35	0.53	0.65	0.88	1.08	1.30	**1yr**	0.93	1.27	1.46	1.87	2.34	2.87	3.22	**1yr**	2.54	3.09	3.64	4.23	4.88	**1yr**
2yr	0.39	0.61	0.75	1.02	1.25	1.50	**2yr**	1.08	1.46	1.69	2.18	2.73	3.28	3.72	**2yr**	2.90	3.58	4.09	4.71	5.35	**2yr**
5yr	0.49	0.75	0.93	1.28	1.62	1.91	**5yr**	1.40	1.87	2.20	2.82	3.56	4.27	4.89	**5yr**	3.78	4.70	5.24	6.07	6.83	**5yr**
10yr	0.58	0.89	1.10	1.54	1.99	2.33	**10yr**	1.72	2.28	2.70	3.46	4.36	5.24	6.05	**10yr**	4.64	5.82	6.44	7.36	8.24	**10yr**
25yr	0.73	1.10	1.37	1.96	2.58	3.03	**25yr**	2.22	2.96	3.56	4.72	5.73	6.89	8.01	**25yr**	6.10	7.71	8.48	9.54	10.58	**25yr**
50yr	0.86	1.31	1.63	2.34	3.15	3.70	**50yr**	2.72	3.62	4.39	5.86	7.02	8.46	9.93	**50yr**	7.49	9.55	10.48	11.61	12.80	**50yr**
100yr	1.02	1.55	1.94	2.80	3.84	4.54	**100yr**	3.32	4.44	5.42	7.29	8.63	10.40	12.31	**100yr**	9.20	11.83	12.96	14.15	15.48	**100yr**
200yr	1.22	1.83	2.32	3.36	4.68	5.54	**200yr**	4.04	5.42	6.69	9.06	10.61	12.78	15.27	**200yr**	11.31	14.68	16.05	17.27	18.73	**200yr**
500yr	1.54	2.29	2.95	4.28	6.09	7.24	**500yr**	5.25	7.08	8.83	12.10	13.95	16.77	20.29	**500yr**	14.84	19.51	21.36	22.49	24.16	**500yr**

Powered by ACIS Northeast Regional Climate Center

DEEP TEST PIT LOG

141 North Water Street- City of Poughkeepsie

Completed By: SN

Dated: July 2, 2025

TEST HOLE	TOTAL DEPTH	WATER LEVEL	ROCK LEVEL	SOILS
1	7	NA	NA	Grass and Sandy Soil 0-6"
				Fill Material 6"-7' Sandy, Gravely, Cobbles
				Brick, Plastics, Burried Tree at 7'
2	6	NA	6	Grass and Sandy Soil 0-6"
				Fill Material 6"-7' Sandy, Gravely, Cobbles
				Brick, Plastics, Rock at 6'
3	5	4	NA	Fill Material- Sandy, Gravely, Cobbles
				Bricks--Ground Water at 4'
4	6	NA	6	Fill Material- Sandy, Gravely 0-18"
				18"-6' Sandy Gravely Mix with Cobbles
				and Bricks, Burried Organics
				Rock at 6'
5	7.5	NA	7.5'	Fill Material-Cobble Gravel Sandy Mix 0-12"
				Flaked Shale w/above noted Mix 12"-5.5'
				Rippable Shale 5.5'-7.5'
				Hard Rock at 7.5'
6	5.5	NA	5.5	Fill Material-Sandy, Gravel, Cobble Mix 0-18"
				Mixed material noted above-18"
				Hard Rock at 5.5'

LRC Engineering & Surveying, DPC
LRC Engineering & Surveying, LLC
LRC Environmental Services, Inc.

85 Civic Center Plaza, Suite 204
Poughkeepsie, NY 12601
Tel: (845) 243-2880
Fax: (845) 265-8175

INFILTRATION TEST LOG

141 North Water Street- City of Poughkeepsie

Completed By: SN

Dated: July 2, 2025

TEST HOLE	TOTAL DEPTH	RUN ONE (in/hr)	RUN TWO (in/hr)	RUN THREE (in/hr)	AVERAGE RUN (in/hr)
1	5.5	50	51	52	51.0
2	5	60	61	61	60.6
*3	2	25	26	27	26.0
4	4	0			0.0
5	5	240	240	240	240
6	3	210	210.7	211	210.56

Location of Infiltration Tests shown on DA-1

LRC Engineering & Surveying, DPC
LRC Engineering & Surveying, LLC
LRC Environmental Services, Inc.

85 Civic Center Plaza, Suite 204
Poughkeepsie, NY 12601
Tel: (845) 243-2880
Fax: (845) 265-8175

Pre Post Flow Analysis

Peak Flow Discharge Rate DP-1			
Storm Event	**Pre (cfs)**	**Post (cfs)**	**Net Reduction (cfs)**
1	1.4	0.1	**-1.3**
2	1.8	0.2	**-1.6**
10	2.9	0.5	**-2.4**
100	5.2	2.0	**-3.2**

Peak Flow Discharge Rate DP-2			
Storm Event	**Pre (cfs)**	**Post (cfs)**	**Net Reduction (cfs)**
1	0.6	0.0	**-0.6**
2	0.8	0.0	**-0.8**
10	1.3	0.1	**-1.3**
100	2.5	0.2	**-2.3**

Peak Flow Discharge Rate DP-3			
Storm Event	**Pre (cfs)**	**Post (cfs)**	**Net Reduction (cfs)**
1	0.0	0.0	**0.0**
2	0.0	0.0	**0.0**
10	0.0	0.2	**0.2**
100	0.0	1.1	**1.1**

Peak Flow Discharge Rate OVERALL			
Storm Event	**Pre (cfs)**	**Post (cfs)**	**Net Reduction (cfs)**
1	2.0	0.1	**-1.8**
2	2.6	0.2	**-2.4**
10	4.2	0.7	**-3.5**
100	7.6	3.2	**-4.4**

APPENDIX E

Pre-Development Run-off Calculations

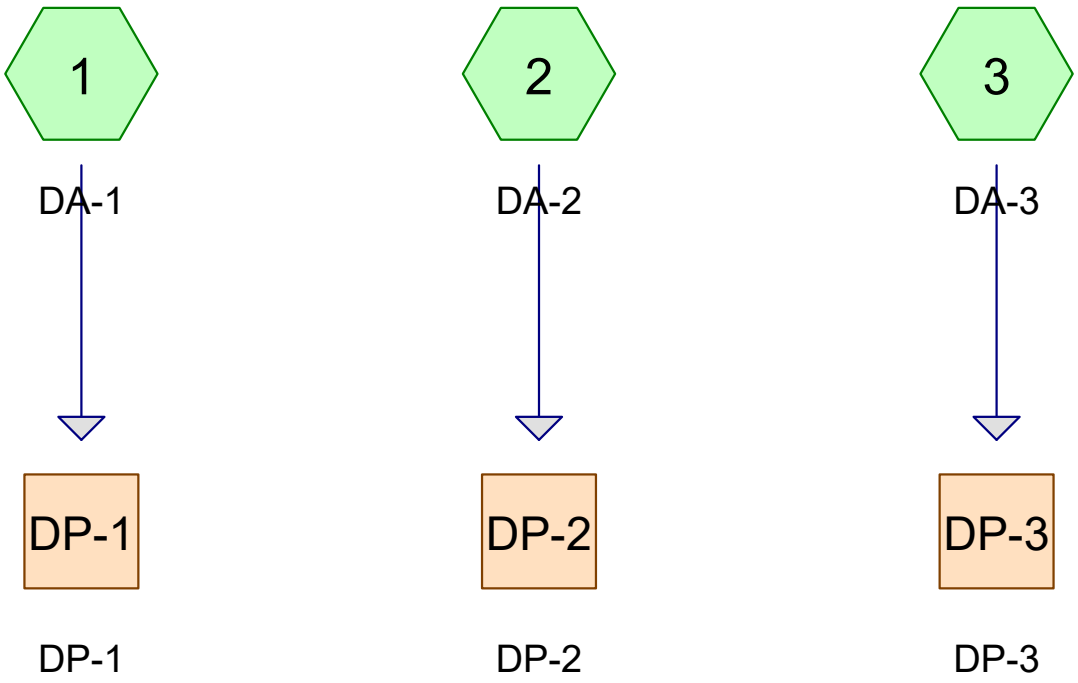

Subcat Reach Pond Link

Routing Diagram for 141 N Water_PRE
Prepared by The LRC Group
HydroCAD® 10.20-6a s/n 02009 © 2024 HydroCAD Software Solutions LLC

Rainfall Events Listing (selected events)

Event#	Event Name	Storm Type	Curve	Mode	Duration (hours)	B/B	Depth (inches)	AMC
1	1-yr	NY-Poughkeepsie 24-hr S1	1-yr	Default	24.00	1	2.61	2
2	2-yr	NY-Poughkeepsie 24-hr S1	2-yr	Default	24.00	1	3.16	2
3	10-yr	NY-Poughkeepsie 24-hr S1	10-yr	Default	24.00	1	4.68	2
4	100-yr	NY-Poughkeepsie 24-hr S1	100-yr	Default	24.00	1	8.22	2

Area Listing (all nodes)

Area (sq-ft)	CN	Description (subcatchment-numbers)
23,113	79	<50% Grass cover, Poor, HSG B (1, 2)
22,019	98	Paved parking, HSG B (1, 2)
45,132	**88**	**TOTAL AREA**

Soil Listing (all nodes)

Area (sq-ft)	Soil Group	Subcatchment Numbers
0	HSG A	
45,132	HSG B	1, 2
0	HSG C	
0	HSG D	
0	Other	
45,132		**TOTAL AREA**

Ground Covers (all nodes)

HSG-A (sq-ft)	HSG-B (sq-ft)	HSG-C (sq-ft)	HSG-D (sq-ft)	Other (sq-ft)	Total (sq-ft)	Ground Cover	Sub Nur
0	23,113	0	0	0	23,113	<50% Grass cover, Poor	
0	22,019	0	0	0	22,019	Paved parking	
0	**45,132**	**0**	**0**	**0**	**45,132**	**TOTAL AREA**	

Time span=0.00-30.00 hrs, dt=0.05 hrs, 601 points
Runoff by SCS TR-20 method, UH=SCS, Weighted-CN
Reach routing by Stor-Ind+Trans method - Pond routing by Stor-Ind method

Subcatchment 1: DA-1 Runoff Area=30,238 sf 53.94% Impervious Runoff Depth=1.55"
Flow Length=346' Tc=6.0 min CN=89 Runoff=1.38 cfs 3,909 cf

Subcatchment 2: DA-2 Runoff Area=14,894 sf 38.32% Impervious Runoff Depth=1.33"
Flow Length=91' Tc=6.0 min CN=86 Runoff=0.58 cfs 1,656 cf

Subcatchment 3: DA-3
Runoff=0.00 cfs 0 cf

Reach DP-1: DP-1 Inflow=1.38 cfs 3,909 cf
Outflow=1.38 cfs 3,909 cf

Reach DP-2: DP-2 Inflow=0.58 cfs 1,656 cf
Outflow=0.58 cfs 1,656 cf

Reach DP-3: DP-3 Inflow=0.00 cfs 0 cf
Outflow=0.00 cfs 0 cf

Total Runoff Area = 45,132 sf Runoff Volume = 5,565 cf Average Runoff Depth = 1.48"
51.21% Pervious = 23,113 sf 48.79% Impervious = 22,019 sf

Summary for Subcatchment 1: DA-1

Runoff = 1.38 cfs @ 12.04 hrs, Volume= 3,909 cf, Depth= 1.55"
Routed to Reach DP-1 : DP-1

Runoff by SCS TR-20 method, UH=SCS, Weighted-CN, Time Span= 0.00-30.00 hrs, dt= 0.05 hrs
NY-Poughkeepsie 24-hr S1 1-yr Rainfall=2.61"

Area (sf)	CN	Description
13,927	79	<50% Grass cover, Poor, HSG B
16,311	98	Paved parking, HSG B
30,238	89	Weighted Average
13,927		46.06% Pervious Area
16,311		53.94% Impervious Area

Tc (min)	Length (feet)	Slope (ft/ft)	Velocity (ft/sec)	Capacity (cfs)	Description
2.2	100	0.0179	0.75		**Sheet Flow, A-B** n= 0.022 P2= 3.16"
0.6	93	0.0290	2.74		**Shallow Concentrated Flow, B-C** Unpaved Kv= 16.1 fps
0.7	153	0.2550	3.53		**Shallow Concentrated Flow, C-D** Short Grass Pasture Kv= 7.0 fps
3.5	346	Total, Increased to minimum Tc = 6.0 min			

Subcatchment 1: DA-1

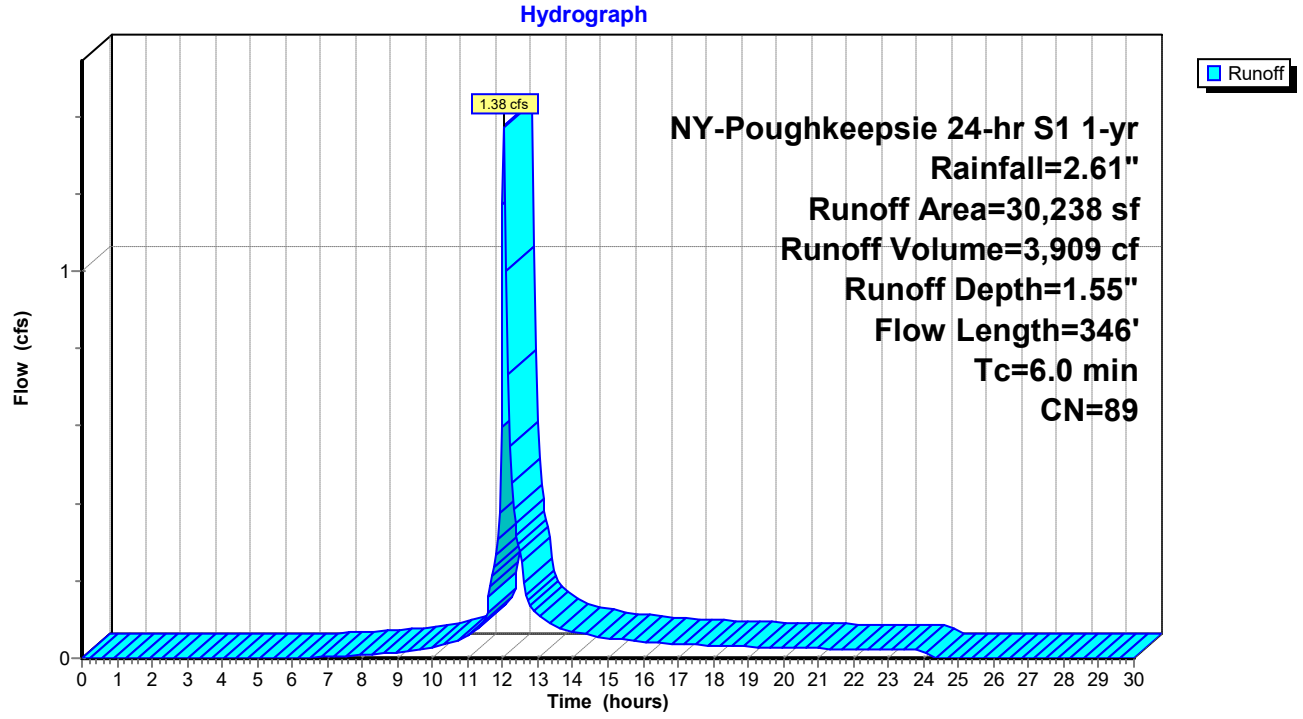

Summary for Subcatchment 2: DA-2

Runoff = 0.58 cfs @ 12.04 hrs, Volume= 1,656 cf, Depth= 1.33"
Routed to Reach DP-2 : DP-2

Runoff by SCS TR-20 method, UH=SCS, Weighted-CN, Time Span= 0.00-30.00 hrs, dt= 0.05 hrs
NY-Poughkeepsie 24-hr S1 1-yr Rainfall=2.61"

Area (sf)	CN	Description
9,186	79	<50% Grass cover, Poor, HSG B
5,708	98	Paved parking, HSG B
14,894	86	Weighted Average
9,186		61.68% Pervious Area
5,708		38.32% Impervious Area

Tc (min)	Length (feet)	Slope (ft/ft)	Velocity (ft/sec)	Capacity (cfs)	Description
1.5	81	0.0310	0.90		**Sheet Flow, A-B** n= 0.022 P2= 3.16"
0.1	10	0.5000	3.13		**Sheet Flow, B-C** Smooth surfaces n= 0.011 P2= 3.16"
1.6	91	Total, Increased to minimum Tc = 6.0 min			

Subcatchment 2: DA-2

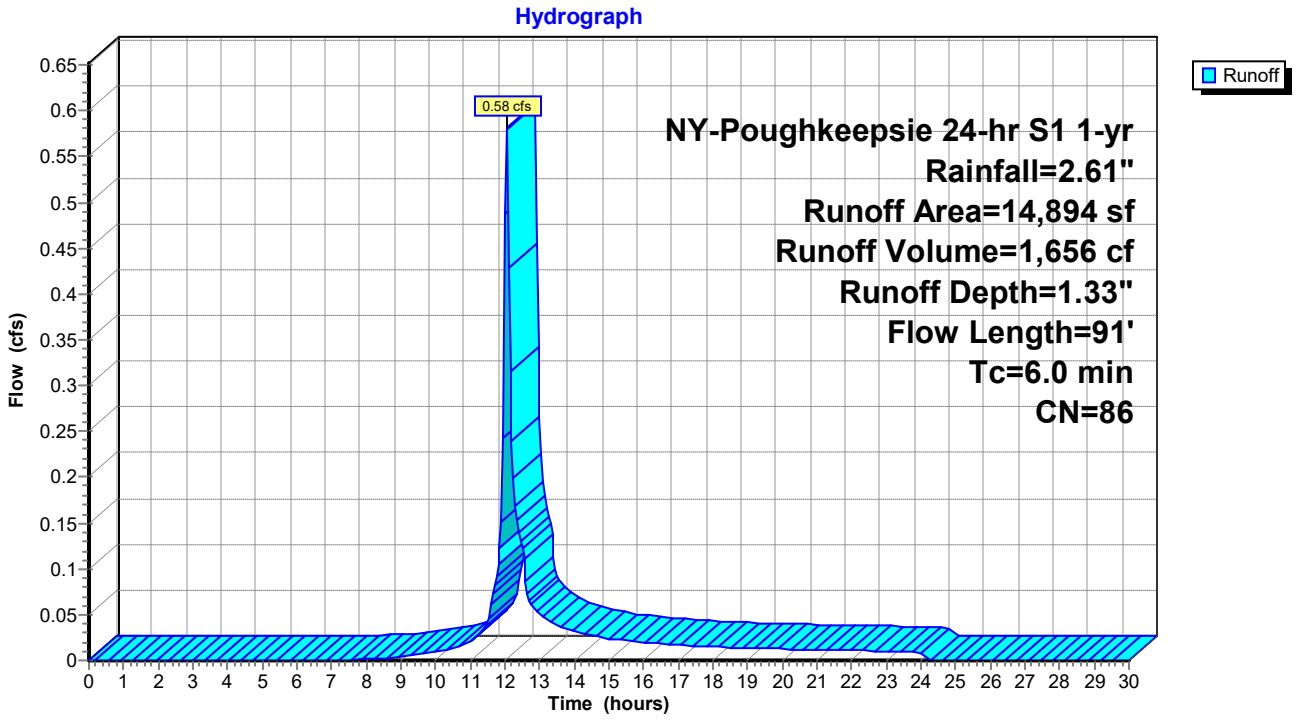

Summary for Subcatchment 3: DA-3

[40] Hint: Not Described (Area=0)

Runoff = 0.00 cfs @ 0.00 hrs, Volume= 0 cf, Depth= 0.00"
Routed to Reach DP-3 : DP-3

Runoff by SCS TR-20 method, UH=SCS, Weighted-CN, Time Span= 0.00-30.00 hrs, dt= 0.05 hrs
NY-Poughkeepsie 24-hr S1 1-yr Rainfall=2.61"

Subcatchment 3: DA-3

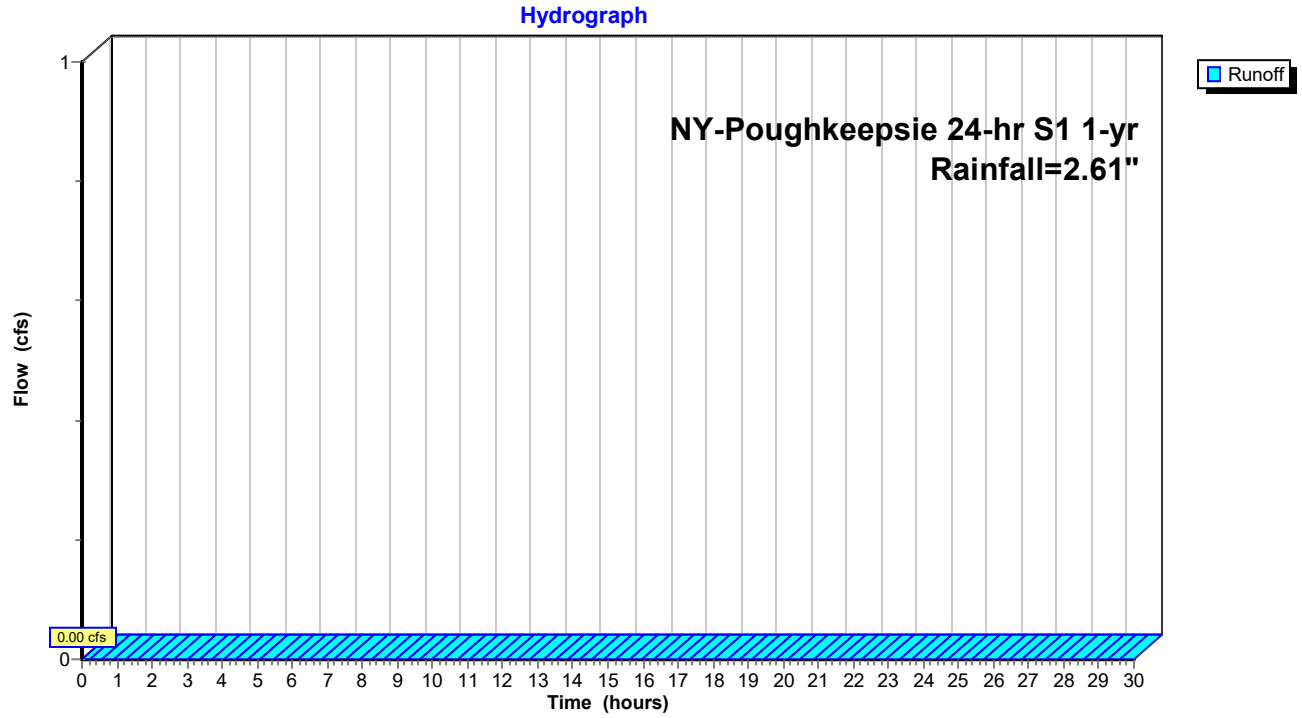

Summary for Reach DP-1: DP-1

[40] Hint: Not Described (Outflow=Inflow)

Inflow Area = 30,238 sf, 53.94% Impervious, Inflow Depth = 1.55" for 1-yr event
Inflow = 1.38 cfs @ 12.04 hrs, Volume= 3,909 cf
Outflow = 1.38 cfs @ 12.04 hrs, Volume= 3,909 cf, Atten= 0%, Lag= 0.0 min

Routing by Stor-Ind+Trans method, Time Span= 0.00-30.00 hrs, dt= 0.05 hrs

Reach DP-1: DP-1

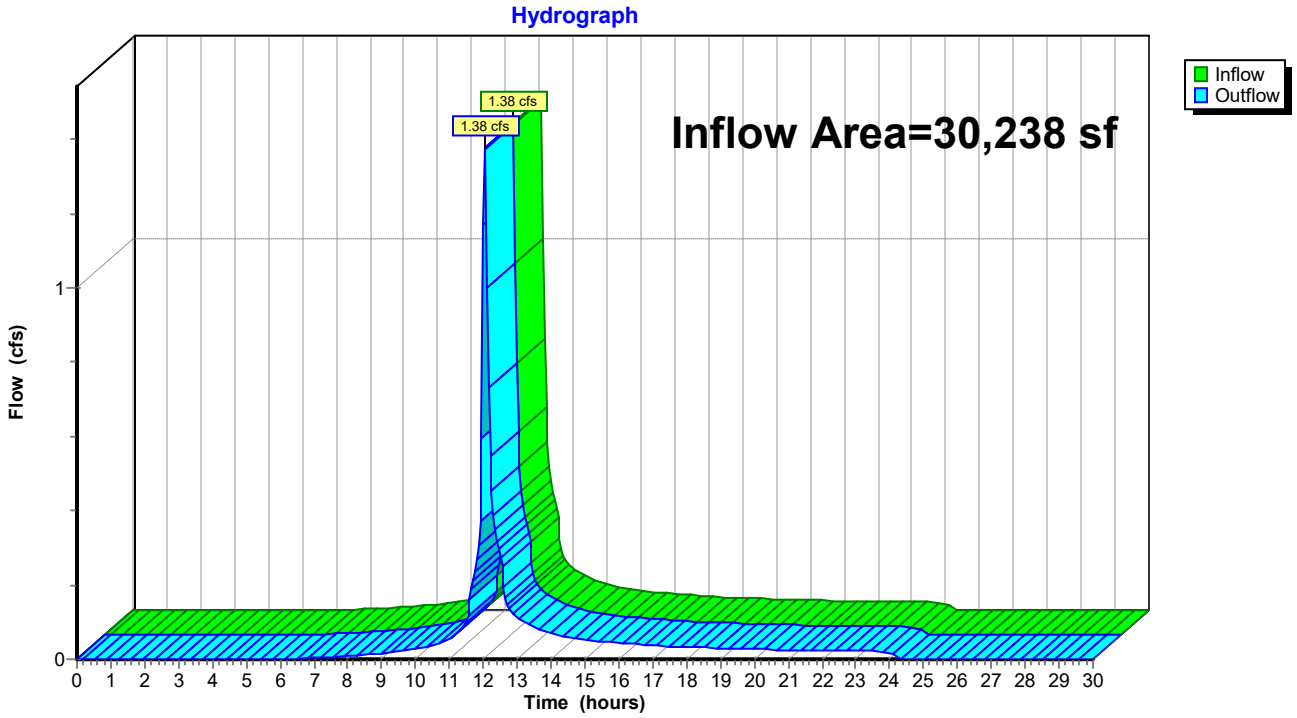

Summary for Reach DP-2: DP-2

[40] Hint: Not Described (Outflow=Inflow)

Inflow Area = 14,894 sf, 38.32% Impervious, Inflow Depth = 1.33" for 1-yr event
Inflow = 0.58 cfs @ 12.04 hrs, Volume= 1,656 cf
Outflow = 0.58 cfs @ 12.04 hrs, Volume= 1,656 cf, Atten= 0%, Lag= 0.0 min

Routing by Stor-Ind+Trans method, Time Span= 0.00-30.00 hrs, dt= 0.05 hrs

Reach DP-2: DP-2

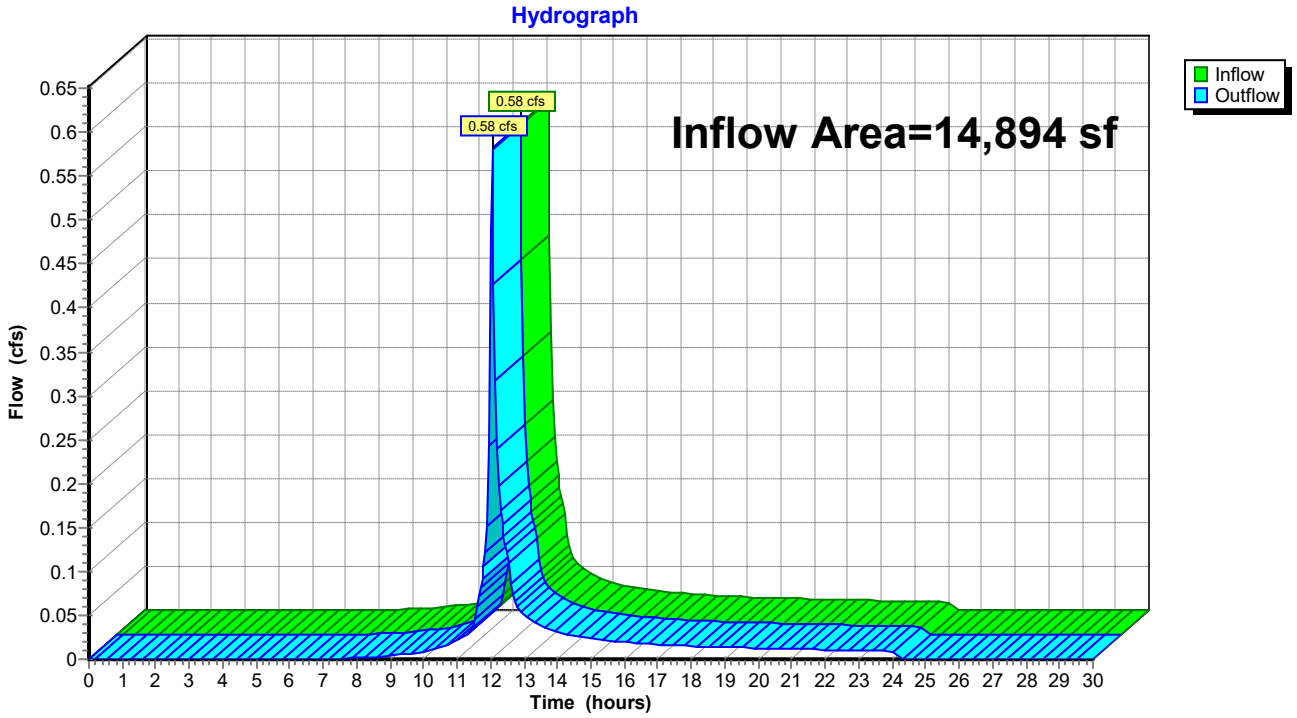

Summary for Reach DP-3: DP-3

[40] Hint: Not Described (Outflow=Inflow)

Inflow	=	0.00 cfs @	0.00 hrs, Volume=	0 cf
Outflow	=	0.00 cfs @	0.00 hrs, Volume=	0 cf, Atten= 0%, Lag= 0.0 min

Routing by Stor-Ind+Trans method, Time Span= 0.00-30.00 hrs, dt= 0.05 hrs

Reach DP-3: DP-3

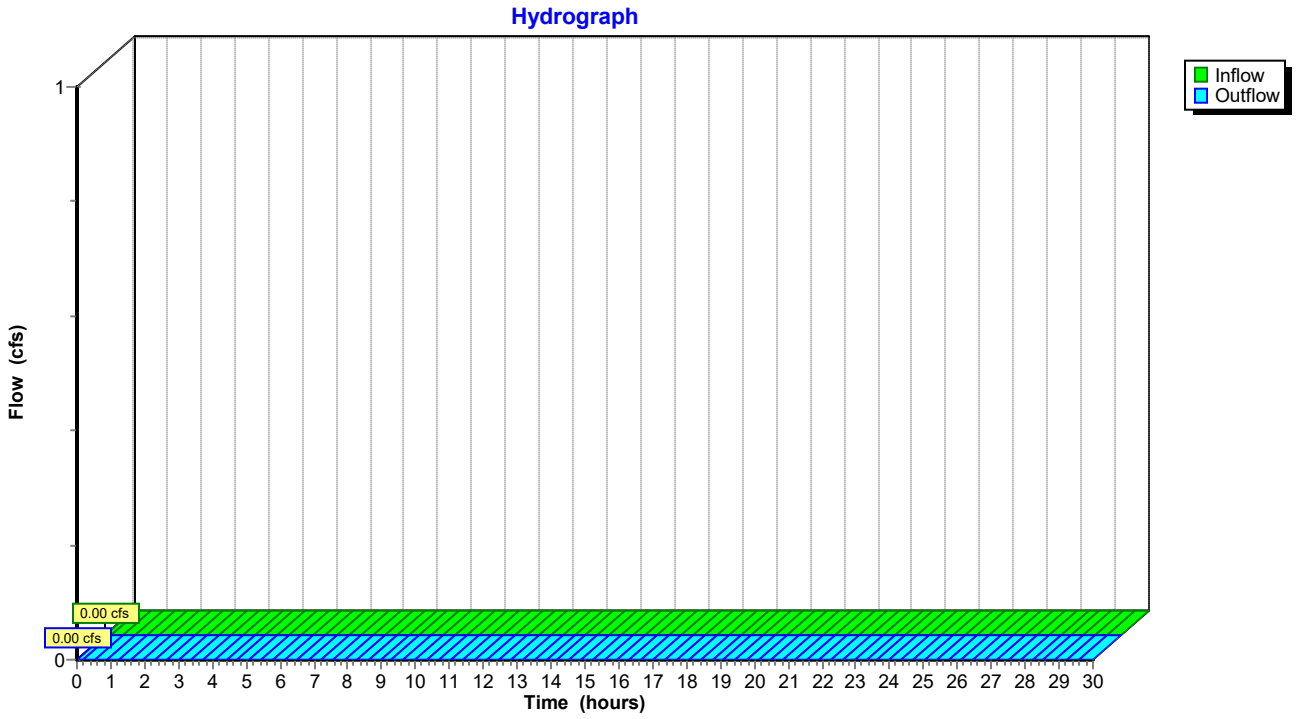

Time span=0.00-30.00 hrs, dt=0.05 hrs, 601 points
Runoff by SCS TR-20 method, UH=SCS, Weighted-CN
Reach routing by Stor-Ind+Trans method - Pond routing by Stor-Ind method

Subcatchment 1: DA-1 Runoff Area=30,238 sf 53.94% Impervious Runoff Depth=2.05"
Flow Length=346' Tc=6.0 min CN=89 Runoff=1.83 cfs 5,153 cf

Subcatchment 2: DA-2 Runoff Area=14,894 sf 38.32% Impervious Runoff Depth=1.80"
Flow Length=91' Tc=6.0 min CN=86 Runoff=0.80 cfs 2,235 cf

Subcatchment 3: DA-3
Runoff=0.00 cfs 0 cf

Reach DP-1: DP-1 Inflow=1.83 cfs 5,153 cf
Outflow=1.83 cfs 5,153 cf

Reach DP-2: DP-2 Inflow=0.80 cfs 2,235 cf
Outflow=0.80 cfs 2,235 cf

Reach DP-3: DP-3 Inflow=0.00 cfs 0 cf
Outflow=0.00 cfs 0 cf

Total Runoff Area = 45,132 sf Runoff Volume = 7,388 cf Average Runoff Depth = 1.96"
51.21% Pervious = 23,113 sf 48.79% Impervious = 22,019 sf

Summary for Subcatchment 1: DA-1

Runoff = 1.83 cfs @ 12.04 hrs, Volume= 5,153 cf, Depth= 2.05"
Routed to Reach DP-1 : DP-1

Runoff by SCS TR-20 method, UH=SCS, Weighted-CN, Time Span= 0.00-30.00 hrs, dt= 0.05 hrs
NY-Poughkeepsie 24-hr S1 2-yr Rainfall=3.16"

Area (sf)	CN	Description
13,927	79	<50% Grass cover, Poor, HSG B
16,311	98	Paved parking, HSG B
30,238	89	Weighted Average
13,927		46.06% Pervious Area
16,311		53.94% Impervious Area

Tc (min)	Length (feet)	Slope (ft/ft)	Velocity (ft/sec)	Capacity (cfs)	Description
2.2	100	0.0179	0.75		**Sheet Flow, A-B** n= 0.022 P2= 3.16"
0.6	93	0.0290	2.74		**Shallow Concentrated Flow, B-C** Unpaved Kv= 16.1 fps
0.7	153	0.2550	3.53		**Shallow Concentrated Flow, C-D** Short Grass Pasture Kv= 7.0 fps
3.5	346	Total, Increased to minimum Tc = 6.0 min			

Subcatchment 1: DA-1

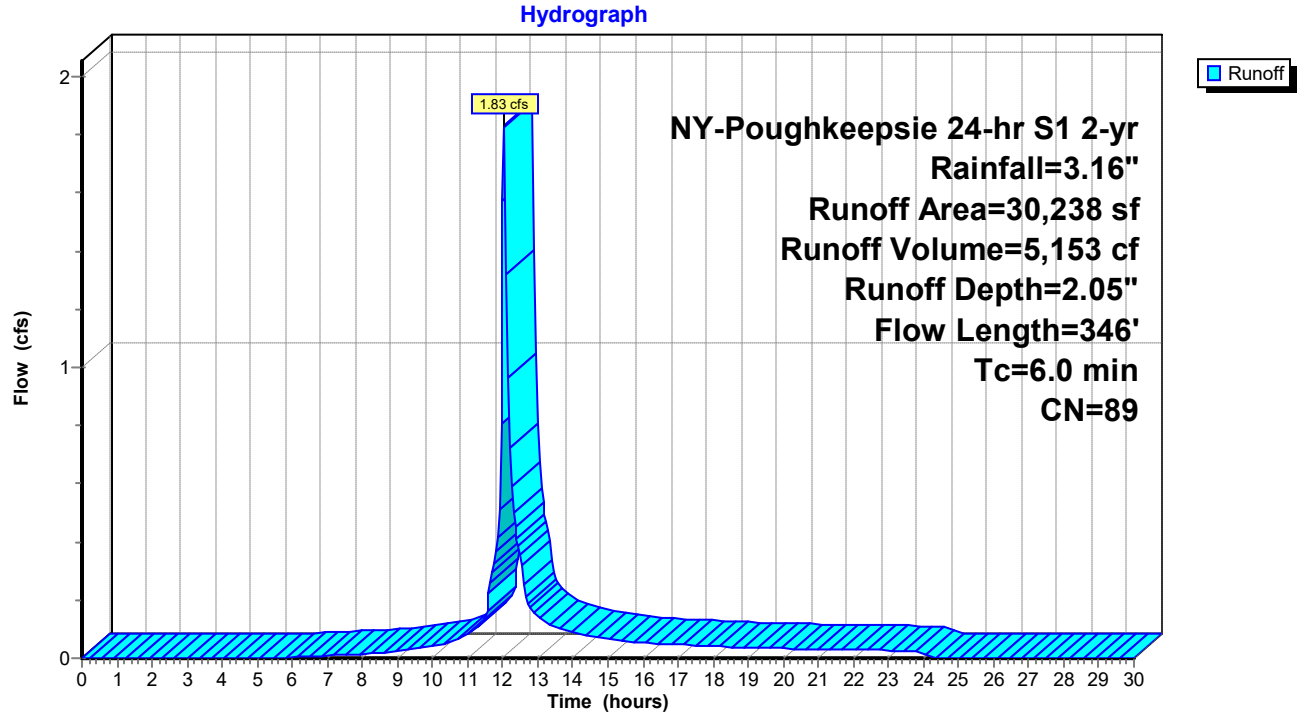

Summary for Subcatchment 2: DA-2

Runoff = 0.80 cfs @ 12.04 hrs, Volume= 2,235 cf, Depth= 1.80"
Routed to Reach DP-2 : DP-2

Runoff by SCS TR-20 method, UH=SCS, Weighted-CN, Time Span= 0.00-30.00 hrs, dt= 0.05 hrs
NY-Poughkeepsie 24-hr S1 2-yr Rainfall=3.16"

Area (sf)	CN	Description
9,186	79	<50% Grass cover, Poor, HSG B
5,708	98	Paved parking, HSG B
14,894	86	Weighted Average
9,186		61.68% Pervious Area
5,708		38.32% Impervious Area

Tc (min)	Length (feet)	Slope (ft/ft)	Velocity (ft/sec)	Capacity (cfs)	Description
1.5	81	0.0310	0.90		**Sheet Flow, A-B** n= 0.022 P2= 3.16"
0.1	10	0.5000	3.13		**Sheet Flow, B-C** Smooth surfaces n= 0.011 P2= 3.16"
1.6	91	Total, Increased to minimum Tc = 6.0 min			

Subcatchment 2: DA-2

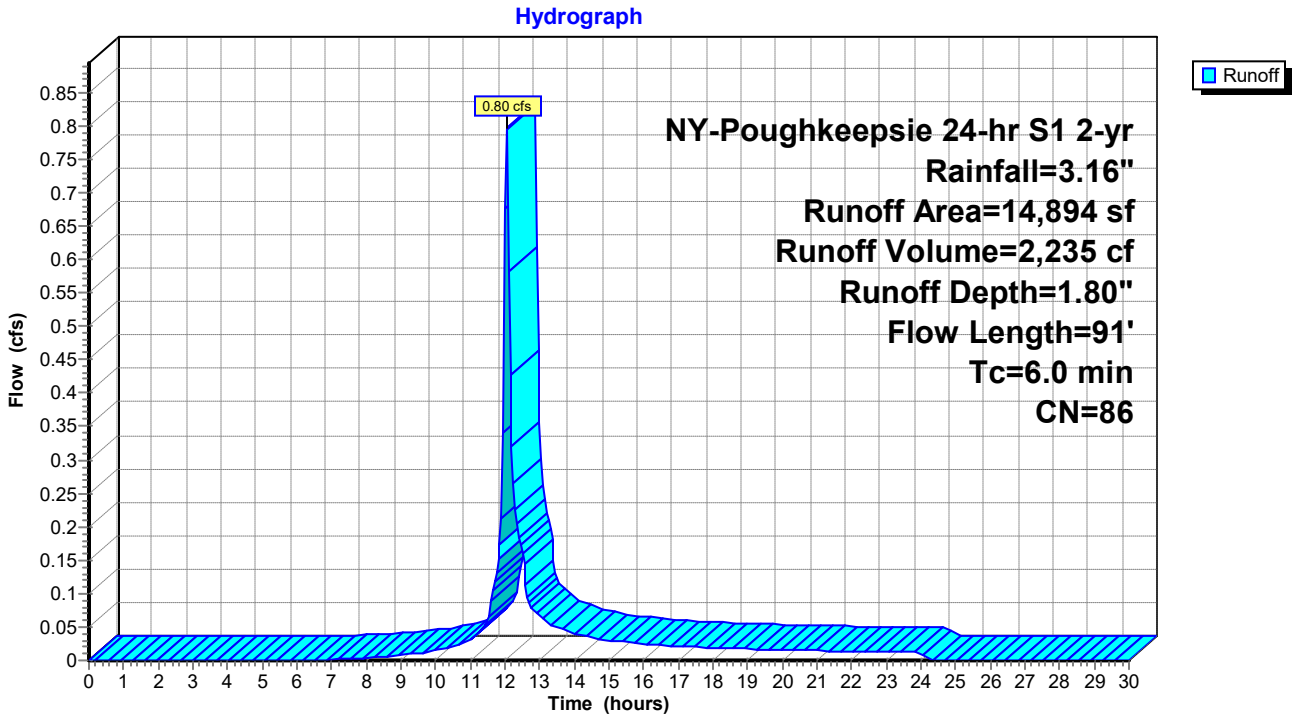

Summary for Subcatchment 3: DA-3

[40] Hint: Not Described (Area=0)

Runoff = 0.00 cfs @ 0.00 hrs, Volume= 0 cf, Depth= 0.00"
Routed to Reach DP-3 : DP-3

Runoff by SCS TR-20 method, UH=SCS, Weighted-CN, Time Span= 0.00-30.00 hrs, dt= 0.05 hrs
NY-Poughkeepsie 24-hr S1 2-yr Rainfall=3.16"

Subcatchment 3: DA-3

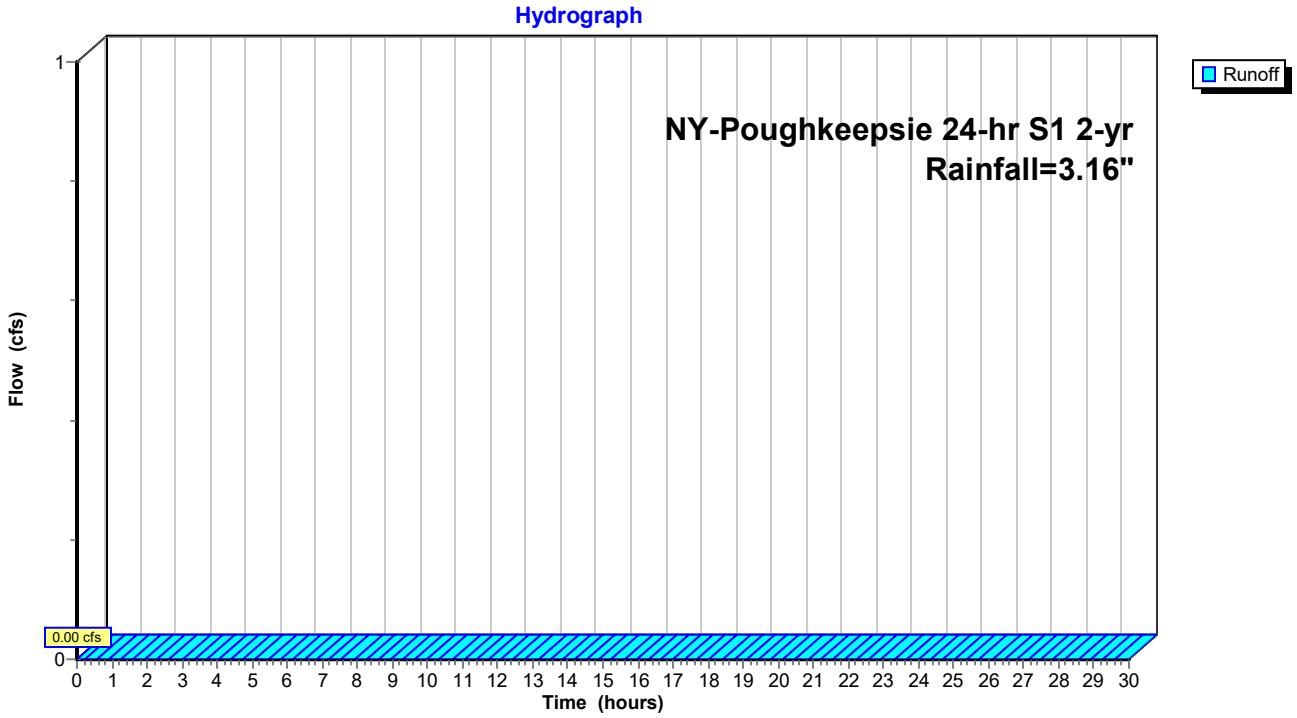

Summary for Reach DP-1: DP-1

[40] Hint: Not Described (Outflow=Inflow)

Inflow Area = 30,238 sf, 53.94% Impervious, Inflow Depth = 2.05" for 2-yr event
Inflow = 1.83 cfs @ 12.04 hrs, Volume= 5,153 cf
Outflow = 1.83 cfs @ 12.04 hrs, Volume= 5,153 cf, Atten= 0%, Lag= 0.0 min

Routing by Stor-Ind+Trans method, Time Span= 0.00-30.00 hrs, dt= 0.05 hrs

Reach DP-1: DP-1

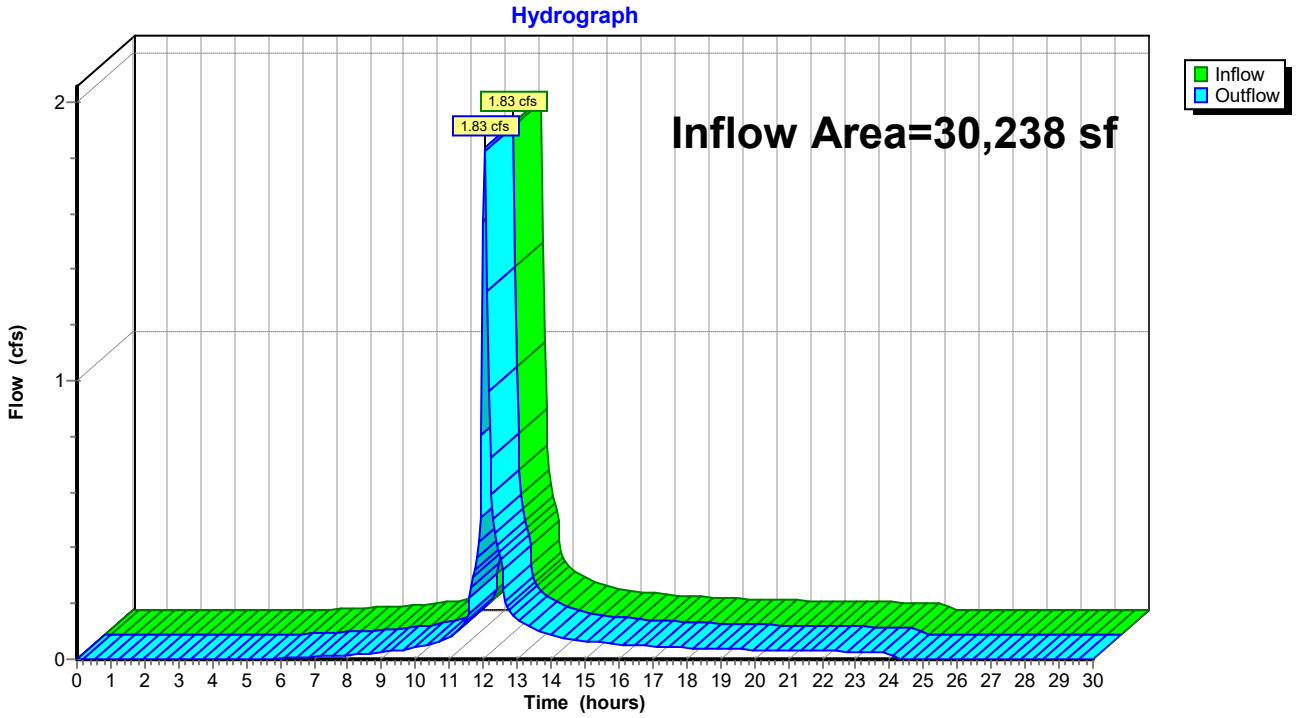

Summary for Reach DP-2: DP-2

[40] Hint: Not Described (Outflow=Inflow)

Inflow Area = 14,894 sf, 38.32% Impervious, Inflow Depth = 1.80" for 2-yr event
Inflow = 0.80 cfs @ 12.04 hrs, Volume= 2,235 cf
Outflow = 0.80 cfs @ 12.04 hrs, Volume= 2,235 cf, Atten= 0%, Lag= 0.0 min

Routing by Stor-Ind+Trans method, Time Span= 0.00-30.00 hrs, dt= 0.05 hrs

Reach DP-2: DP-2

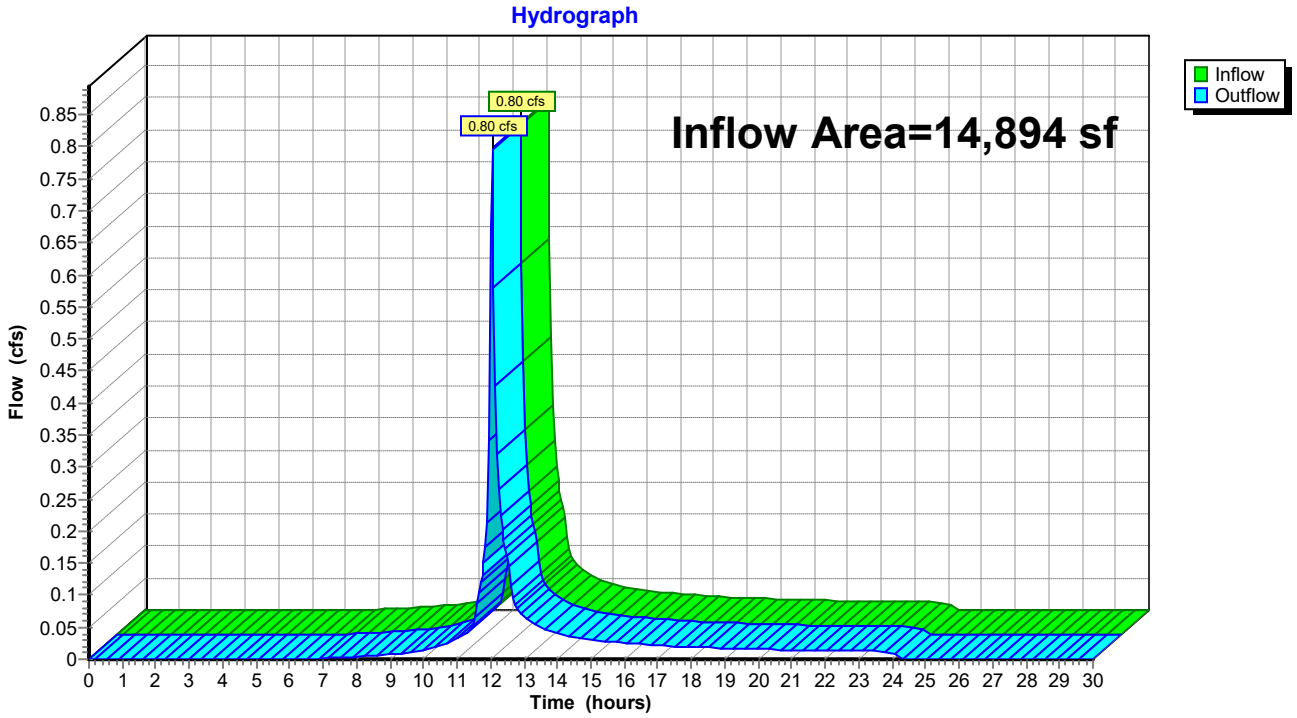

Summary for Reach DP-3: DP-3

[40] Hint: Not Described (Outflow=Inflow)

Inflow	=	0.00 cfs @	0.00 hrs, Volume=	0 cf
Outflow	=	0.00 cfs @	0.00 hrs, Volume=	0 cf, Atten= 0%, Lag= 0.0 min

Routing by Stor-Ind+Trans method, Time Span= 0.00-30.00 hrs, dt= 0.05 hrs

Reach DP-3: DP-3

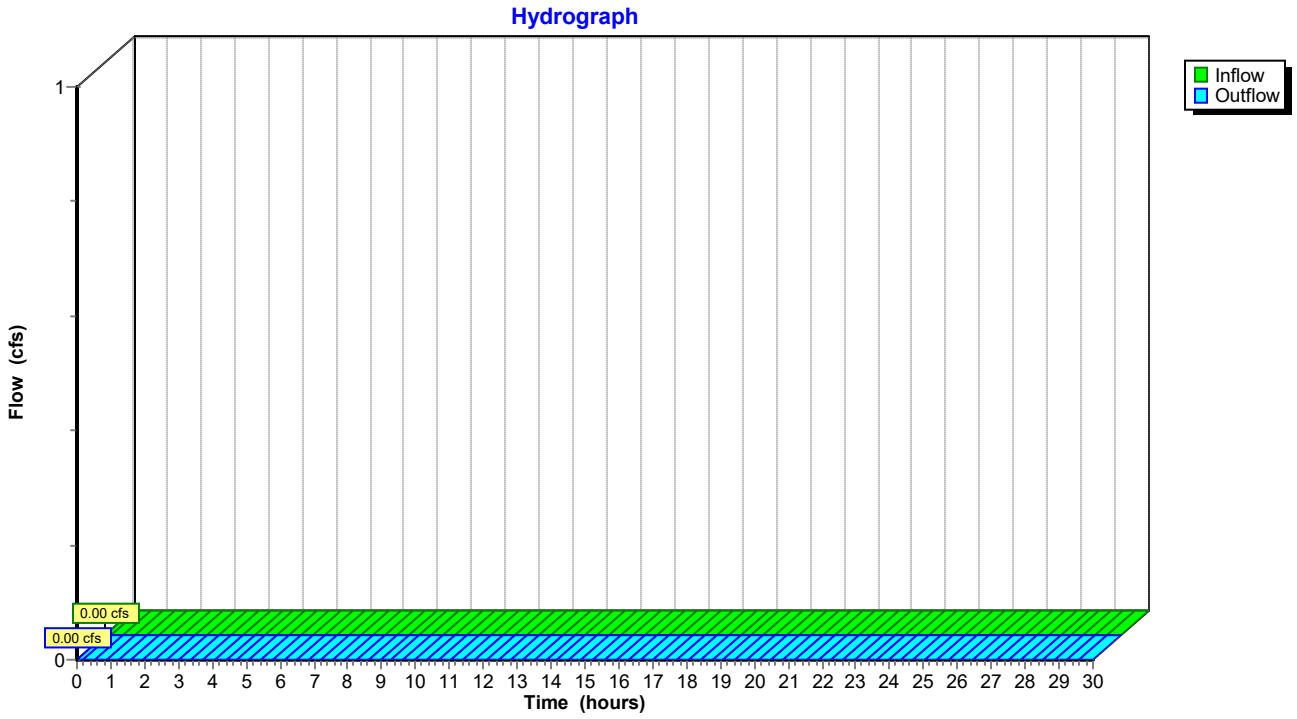

Time span=0.00-30.00 hrs, dt=0.05 hrs, 601 points
Runoff by SCS TR-20 method, UH=SCS, Weighted-CN
Reach routing by Stor-Ind+Trans method - Pond routing by Stor-Ind method

Subcatchment 1: DA-1 Runoff Area=30,238 sf 53.94% Impervious Runoff Depth=3.47"
Flow Length=346' Tc=6.0 min CN=89 Runoff=2.87 cfs 8,735 cf

Subcatchment 2: DA-2 Runoff Area=14,894 sf 38.32% Impervious Runoff Depth=3.17"
Flow Length=91' Tc=6.0 min CN=86 Runoff=1.31 cfs 3,934 cf

Subcatchment 3: DA-3
Runoff=0.00 cfs 0 cf

Reach DP-1: DP-1 Inflow=2.87 cfs 8,735 cf
Outflow=2.87 cfs 8,735 cf

Reach DP-2: DP-2 Inflow=1.31 cfs 3,934 cf
Outflow=1.31 cfs 3,934 cf

Reach DP-3: DP-3 Inflow=0.00 cfs 0 cf
Outflow=0.00 cfs 0 cf

Total Runoff Area = 45,132 sf Runoff Volume = 12,668 cf Average Runoff Depth = 3.37"
51.21% Pervious = 23,113 sf 48.79% Impervious = 22,019 sf

Summary for Subcatchment 1: DA-1

Runoff = 2.87 cfs @ 12.04 hrs, Volume= 8,735 cf, Depth= 3.47"
Routed to Reach DP-1 : DP-1

Runoff by SCS TR-20 method, UH=SCS, Weighted-CN, Time Span= 0.00-30.00 hrs, dt= 0.05 hrs
NY-Poughkeepsie 24-hr S1 10-yr Rainfall=4.68"

Area (sf)	CN	Description
13,927	79	<50% Grass cover, Poor, HSG B
16,311	98	Paved parking, HSG B
30,238	89	Weighted Average
13,927		46.06% Pervious Area
16,311		53.94% Impervious Area

Tc (min)	Length (feet)	Slope (ft/ft)	Velocity (ft/sec)	Capacity (cfs)	Description
2.2	100	0.0179	0.75		**Sheet Flow, A-B** n= 0.022 P2= 3.16"
0.6	93	0.0290	2.74		**Shallow Concentrated Flow, B-C** Unpaved Kv= 16.1 fps
0.7	153	0.2550	3.53		**Shallow Concentrated Flow, C-D** Short Grass Pasture Kv= 7.0 fps
3.5	346	Total, Increased to minimum Tc = 6.0 min			

Subcatchment 1: DA-1

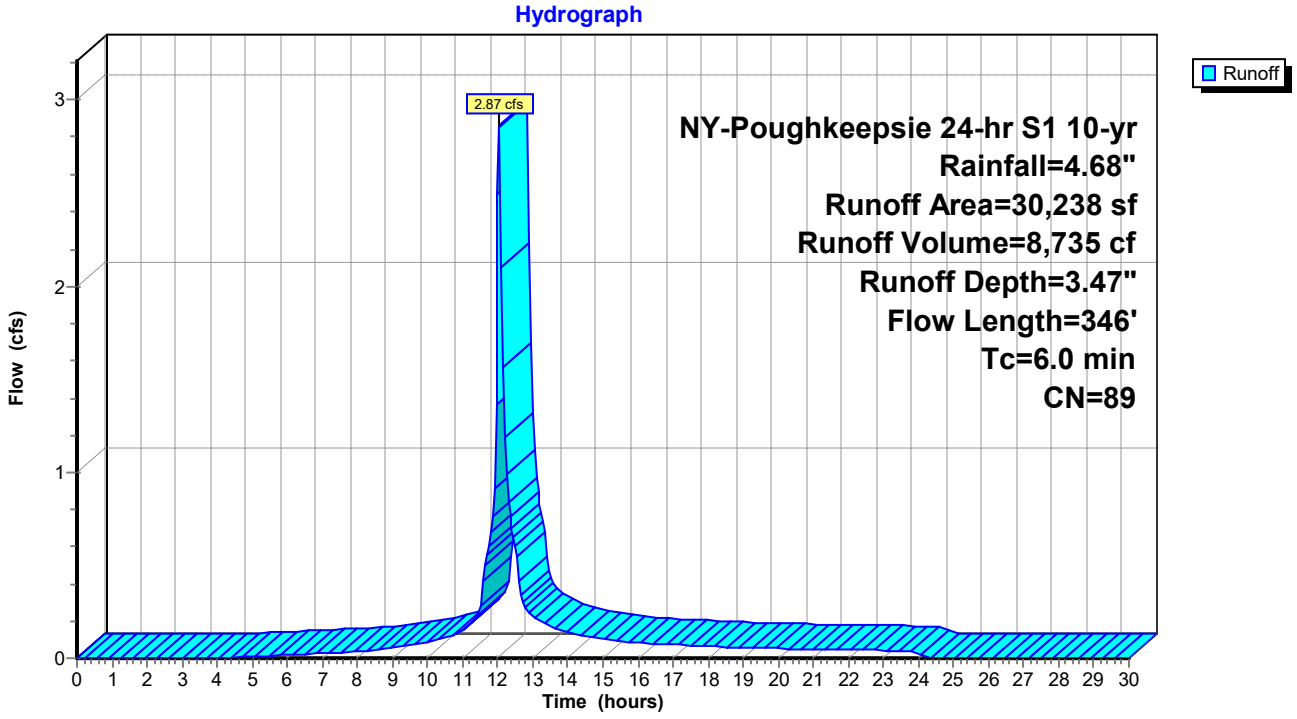

Summary for Subcatchment 2: DA-2

Runoff = 1.31 cfs @ 12.04 hrs, Volume= 3,934 cf, Depth= 3.17"
Routed to Reach DP-2 : DP-2

Runoff by SCS TR-20 method, UH=SCS, Weighted-CN, Time Span= 0.00-30.00 hrs, dt= 0.05 hrs
NY-Poughkeepsie 24-hr S1 10-yr Rainfall=4.68"

Area (sf)	CN	Description
9,186	79	<50% Grass cover, Poor, HSG B
5,708	98	Paved parking, HSG B
14,894	86	Weighted Average
9,186		61.68% Pervious Area
5,708		38.32% Impervious Area

Tc (min)	Length (feet)	Slope (ft/ft)	Velocity (ft/sec)	Capacity (cfs)	Description
1.5	81	0.0310	0.90		**Sheet Flow, A-B** n= 0.022 P2= 3.16"
0.1	10	0.5000	3.13		**Sheet Flow, B-C** Smooth surfaces n= 0.011 P2= 3.16"
1.6	91	Total, Increased to minimum Tc = 6.0 min			

Subcatchment 2: DA-2

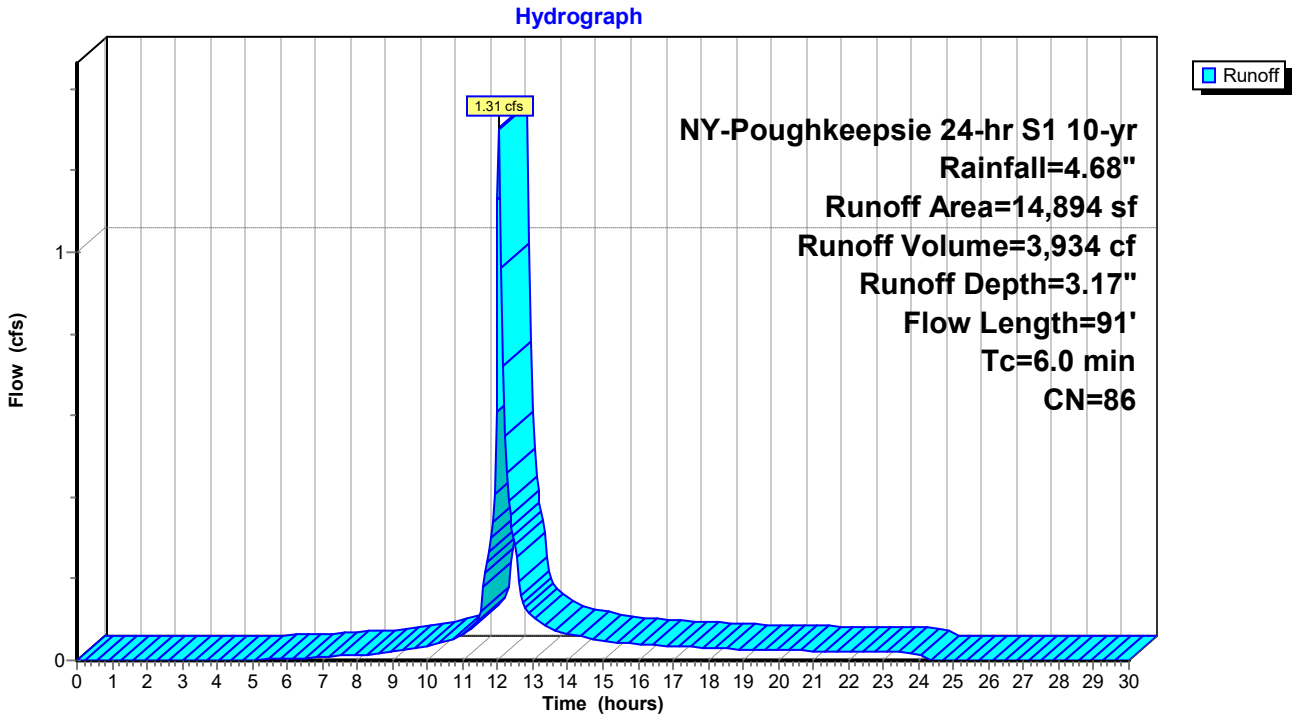

Summary for Subcatchment 3: DA-3

[40] Hint: Not Described (Area=0)

Runoff = 0.00 cfs @ 0.00 hrs, Volume= 0 cf, Depth= 0.00"
Routed to Reach DP-3 : DP-3

Runoff by SCS TR-20 method, UH=SCS, Weighted-CN, Time Span= 0.00-30.00 hrs, dt= 0.05 hrs
NY-Poughkeepsie 24-hr S1 10-yr Rainfall=4.68"

Subcatchment 3: DA-3

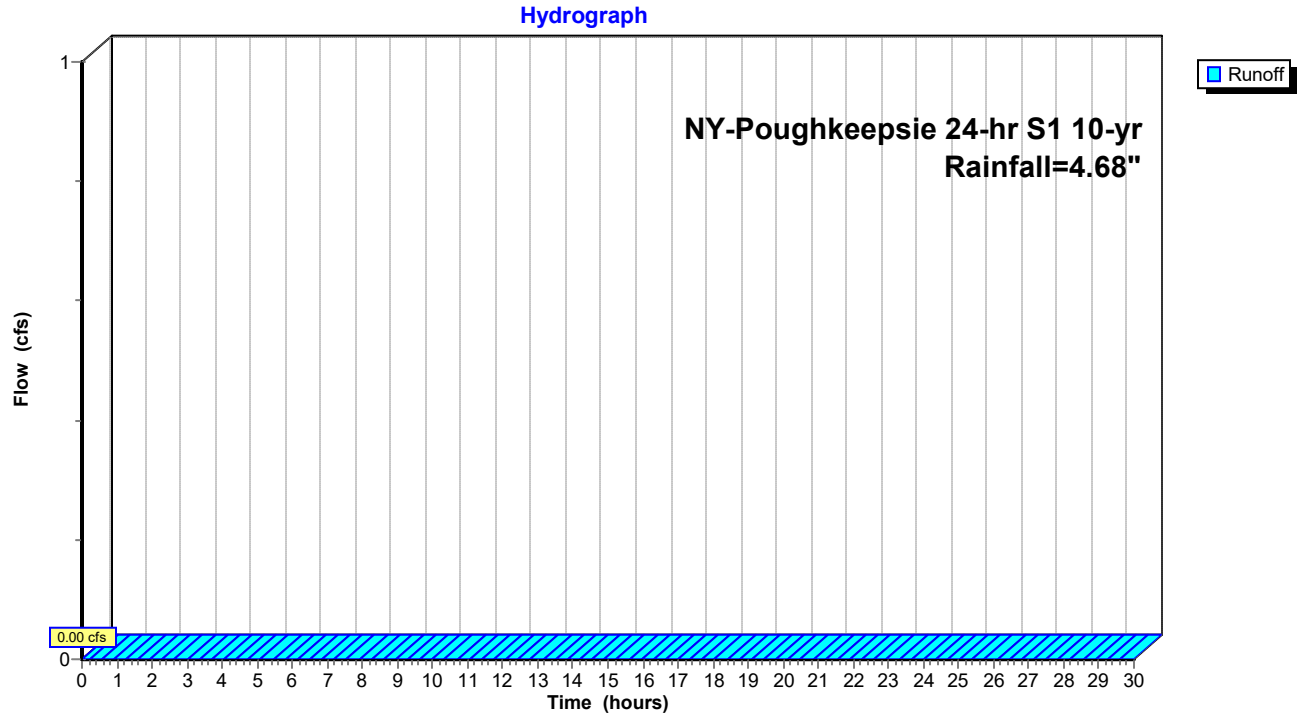

Summary for Reach DP-1: DP-1

[40] Hint: Not Described (Outflow=Inflow)

Inflow Area = 30,238 sf, 53.94% Impervious, Inflow Depth = 3.47" for 10-yr event
Inflow = 2.87 cfs @ 12.04 hrs, Volume= 8,735 cf
Outflow = 2.87 cfs @ 12.04 hrs, Volume= 8,735 cf, Atten= 0%, Lag= 0.0 min

Routing by Stor-Ind+Trans method, Time Span= 0.00-30.00 hrs, dt= 0.05 hrs

Reach DP-1: DP-1

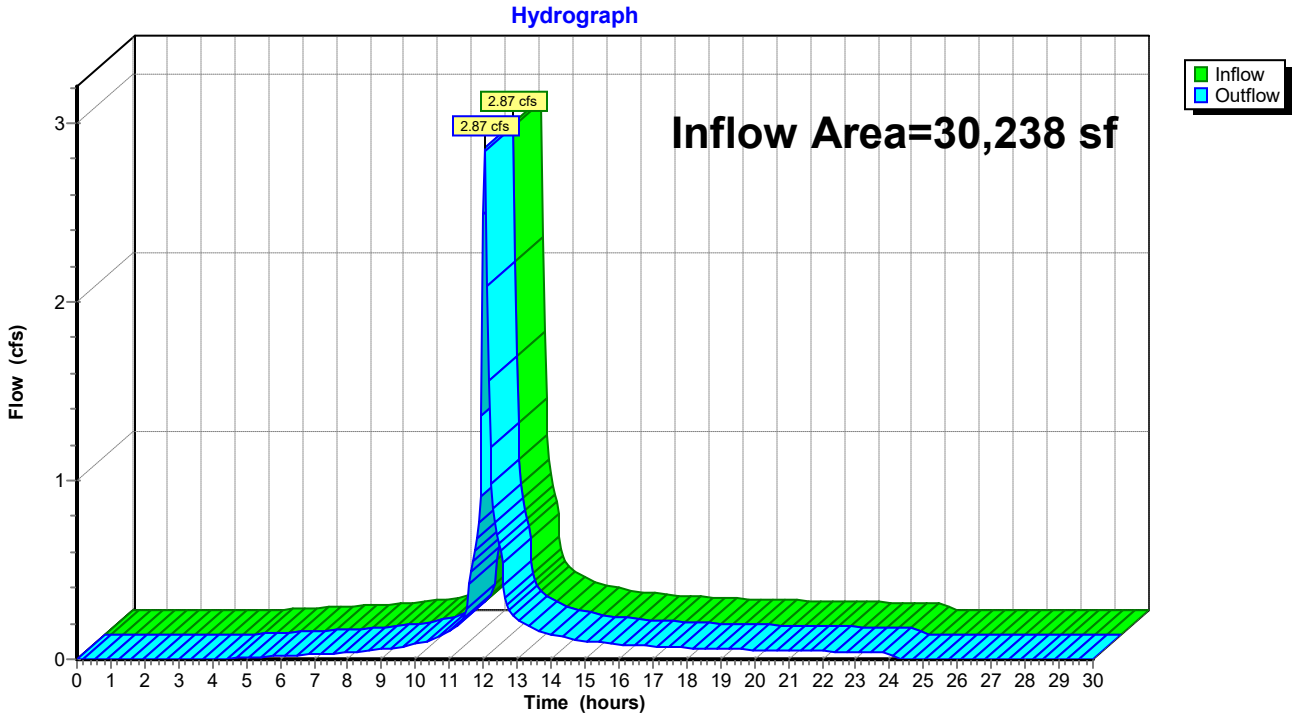

Summary for Reach DP-2: DP-2

[40] Hint: Not Described (Outflow=Inflow)

Inflow Area = 14,894 sf, 38.32% Impervious, Inflow Depth = 3.17" for 10-yr event
Inflow = 1.31 cfs @ 12.04 hrs, Volume= 3,934 cf
Outflow = 1.31 cfs @ 12.04 hrs, Volume= 3,934 cf, Atten= 0%, Lag= 0.0 min

Routing by Stor-Ind+Trans method, Time Span= 0.00-30.00 hrs, dt= 0.05 hrs

Reach DP-2: DP-2

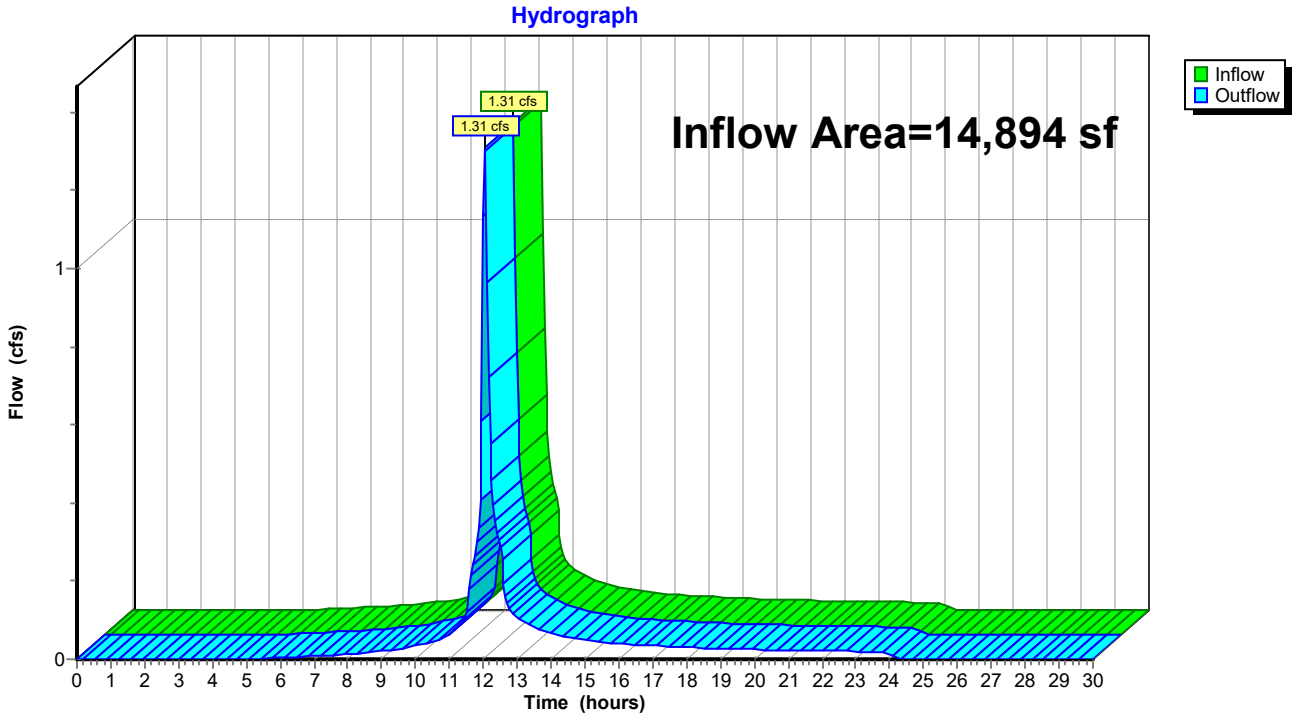

Summary for Reach DP-3: DP-3

[40] Hint: Not Described (Outflow=Inflow)

Inflow	=	0.00 cfs @	0.00 hrs, Volume=	0 cf
Outflow	=	0.00 cfs @	0.00 hrs, Volume=	0 cf, Atten= 0%, Lag= 0.0 min

Routing by Stor-Ind+Trans method, Time Span= 0.00-30.00 hrs, dt= 0.05 hrs

Reach DP-3: DP-3

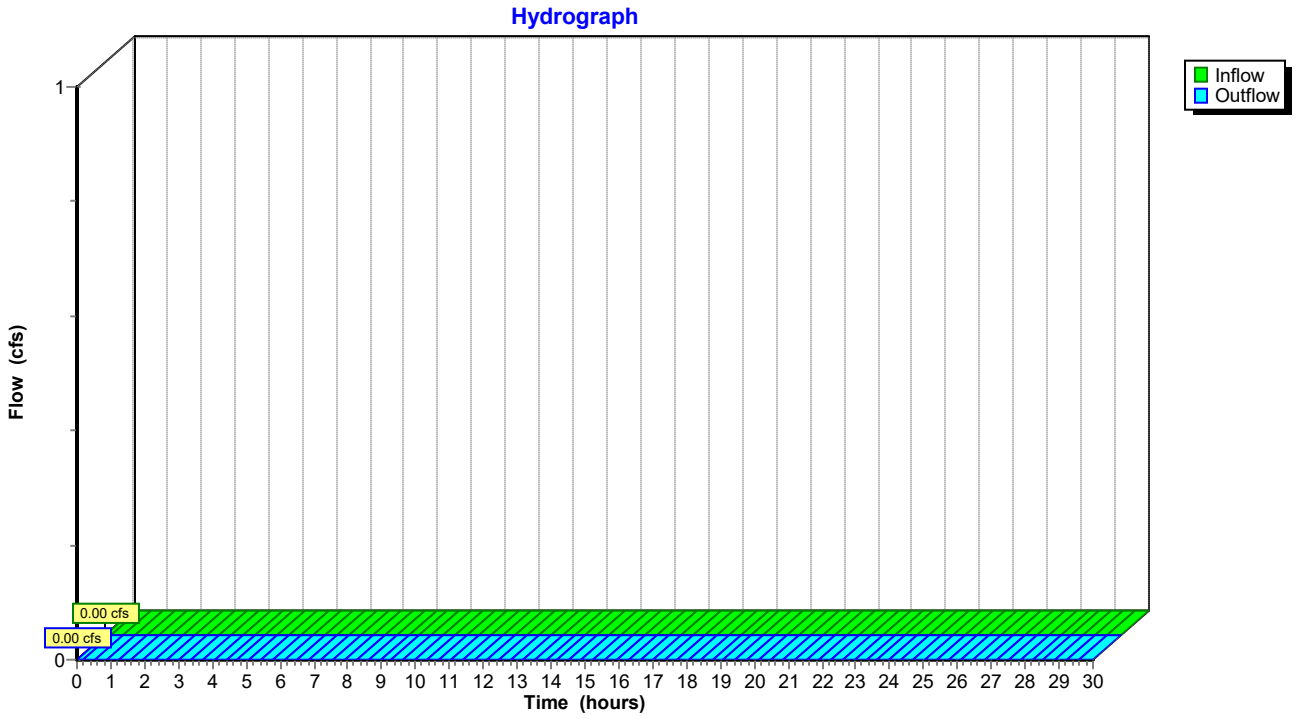

Time span=0.00-30.00 hrs, dt=0.05 hrs, 601 points
Runoff by SCS TR-20 method, UH=SCS, Weighted-CN
Reach routing by Stor-Ind+Trans method - Pond routing by Stor-Ind method

Subcatchment 1: DA-1 Runoff Area=30,238 sf 53.94% Impervious Runoff Depth=6.90"
Flow Length=346' Tc=6.0 min CN=89 Runoff=5.16 cfs 17,394 cf

Subcatchment 2: DA-2 Runoff Area=14,894 sf 38.32% Impervious Runoff Depth=6.54"
Flow Length=91' Tc=6.0 min CN=86 Runoff=2.45 cfs 8,123 cf

Subcatchment 3: DA-3
Runoff=0.00 cfs 0 cf

Reach DP-1: DP-1 Inflow=5.16 cfs 17,394 cf
Outflow=5.16 cfs 17,394 cf

Reach DP-2: DP-2 Inflow=2.45 cfs 8,123 cf
Outflow=2.45 cfs 8,123 cf

Reach DP-3: DP-3 Inflow=0.00 cfs 0 cf
Outflow=0.00 cfs 0 cf

Total Runoff Area = 45,132 sf Runoff Volume = 25,517 cf Average Runoff Depth = 6.78"
51.21% Pervious = 23,113 sf 48.79% Impervious = 22,019 sf

Summary for Subcatchment 1: DA-1

Runoff = 5.16 cfs @ 12.04 hrs, Volume= 17,394 cf, Depth= 6.90"
Routed to Reach DP-1 : DP-1

Runoff by SCS TR-20 method, UH=SCS, Weighted-CN, Time Span= 0.00-30.00 hrs, dt= 0.05 hrs
NY-Poughkeepsie 24-hr S1 100-yr Rainfall=8.22"

Area (sf)	CN	Description
13,927	79	<50% Grass cover, Poor, HSG B
16,311	98	Paved parking, HSG B
30,238	89	Weighted Average
13,927		46.06% Pervious Area
16,311		53.94% Impervious Area

Tc (min)	Length (feet)	Slope (ft/ft)	Velocity (ft/sec)	Capacity (cfs)	Description
2.2	100	0.0179	0.75		**Sheet Flow, A-B** n= 0.022 P2= 3.16"
0.6	93	0.0290	2.74		**Shallow Concentrated Flow, B-C** Unpaved Kv= 16.1 fps
0.7	153	0.2550	3.53		**Shallow Concentrated Flow, C-D** Short Grass Pasture Kv= 7.0 fps
3.5	346	Total, Increased to minimum Tc = 6.0 min			

Subcatchment 1: DA-1

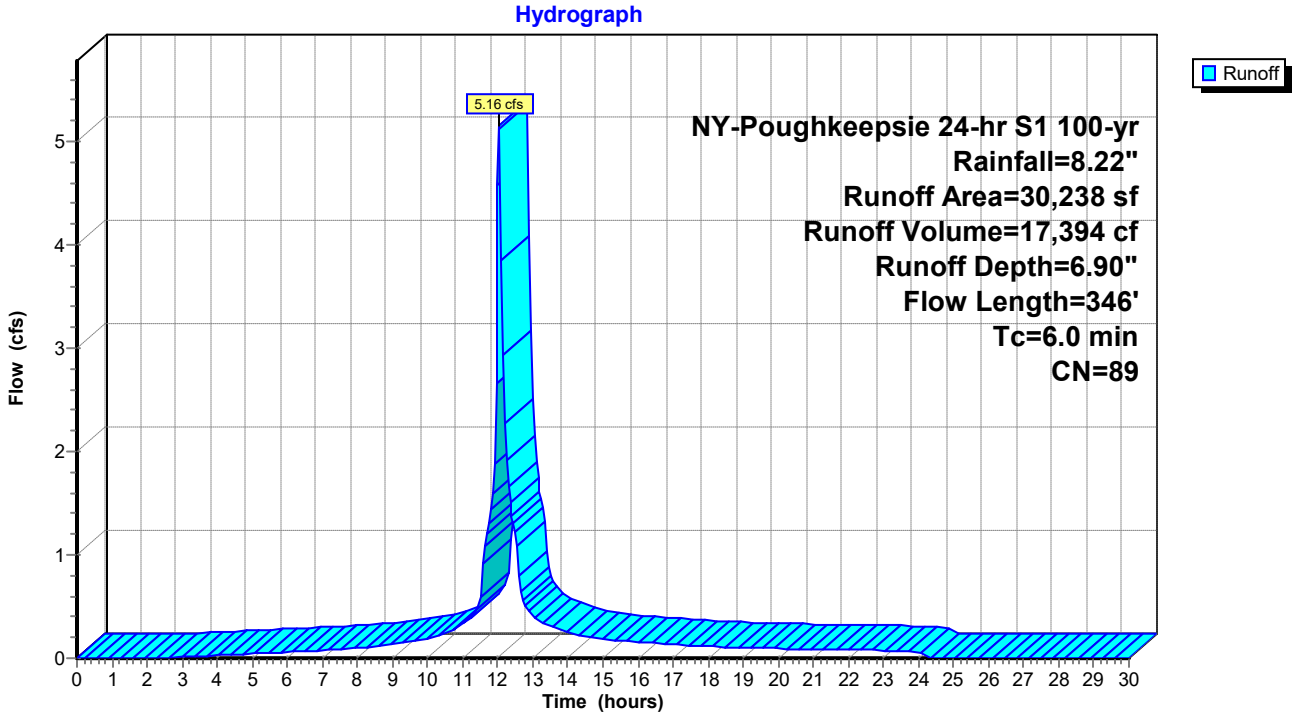

Summary for Subcatchment 2: DA-2

Runoff = 2.45 cfs @ 12.04 hrs, Volume= 8,123 cf, Depth= 6.54"
Routed to Reach DP-2 : DP-2

Runoff by SCS TR-20 method, UH=SCS, Weighted-CN, Time Span= 0.00-30.00 hrs, dt= 0.05 hrs
NY-Poughkeepsie 24-hr S1 100-yr Rainfall=8.22"

Area (sf)	CN	Description
9,186	79	<50% Grass cover, Poor, HSG B
5,708	98	Paved parking, HSG B
14,894	86	Weighted Average
9,186		61.68% Pervious Area
5,708		38.32% Impervious Area

Tc (min)	Length (feet)	Slope (ft/ft)	Velocity (ft/sec)	Capacity (cfs)	Description
1.5	81	0.0310	0.90		**Sheet Flow, A-B** n= 0.022 P2= 3.16"
0.1	10	0.5000	3.13		**Sheet Flow, B-C** Smooth surfaces n= 0.011 P2= 3.16"
1.6	91	Total, Increased to minimum Tc = 6.0 min			

Subcatchment 2: DA-2

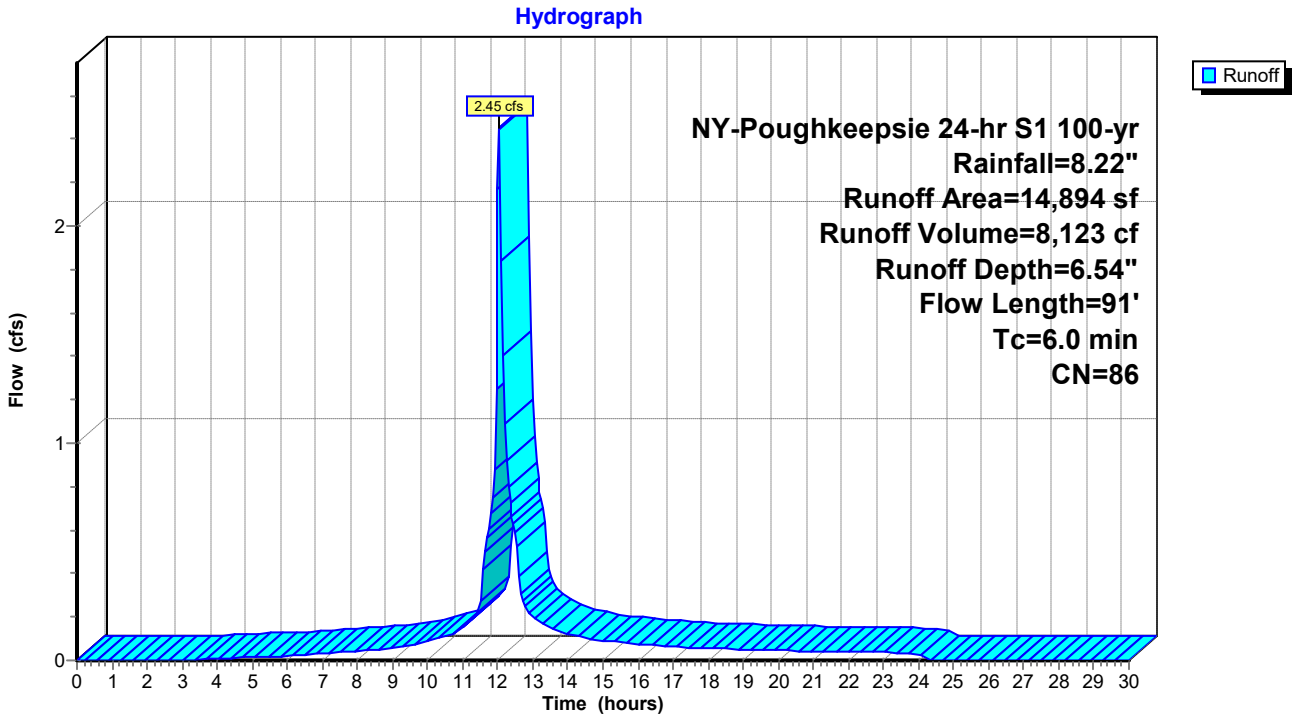

Summary for Subcatchment 3: DA-3

[40] Hint: Not Described (Area=0)

Runoff = 0.00 cfs @ 0.00 hrs, Volume= 0 cf, Depth= 0.00"
Routed to Reach DP-3 : DP-3

Runoff by SCS TR-20 method, UH=SCS, Weighted-CN, Time Span= 0.00-30.00 hrs, dt= 0.05 hrs
NY-Poughkeepsie 24-hr S1 100-yr Rainfall=8.22"

Subcatchment 3: DA-3

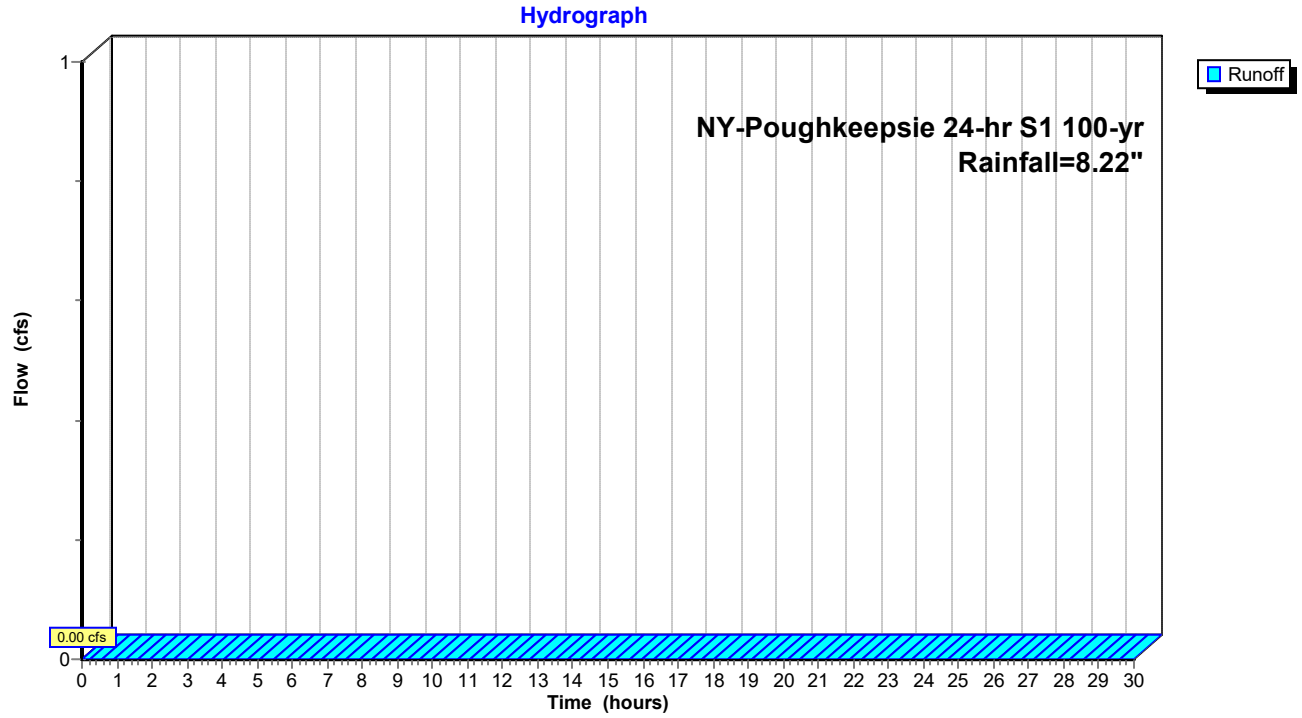

Summary for Reach DP-1: DP-1

[40] Hint: Not Described (Outflow=Inflow)

Inflow Area = 30,238 sf, 53.94% Impervious, Inflow Depth = 6.90" for 100-yr event
Inflow = 5.16 cfs @ 12.04 hrs, Volume= 17,394 cf
Outflow = 5.16 cfs @ 12.04 hrs, Volume= 17,394 cf, Atten= 0%, Lag= 0.0 min

Routing by Stor-Ind+Trans method, Time Span= 0.00-30.00 hrs, dt= 0.05 hrs

Reach DP-1: DP-1

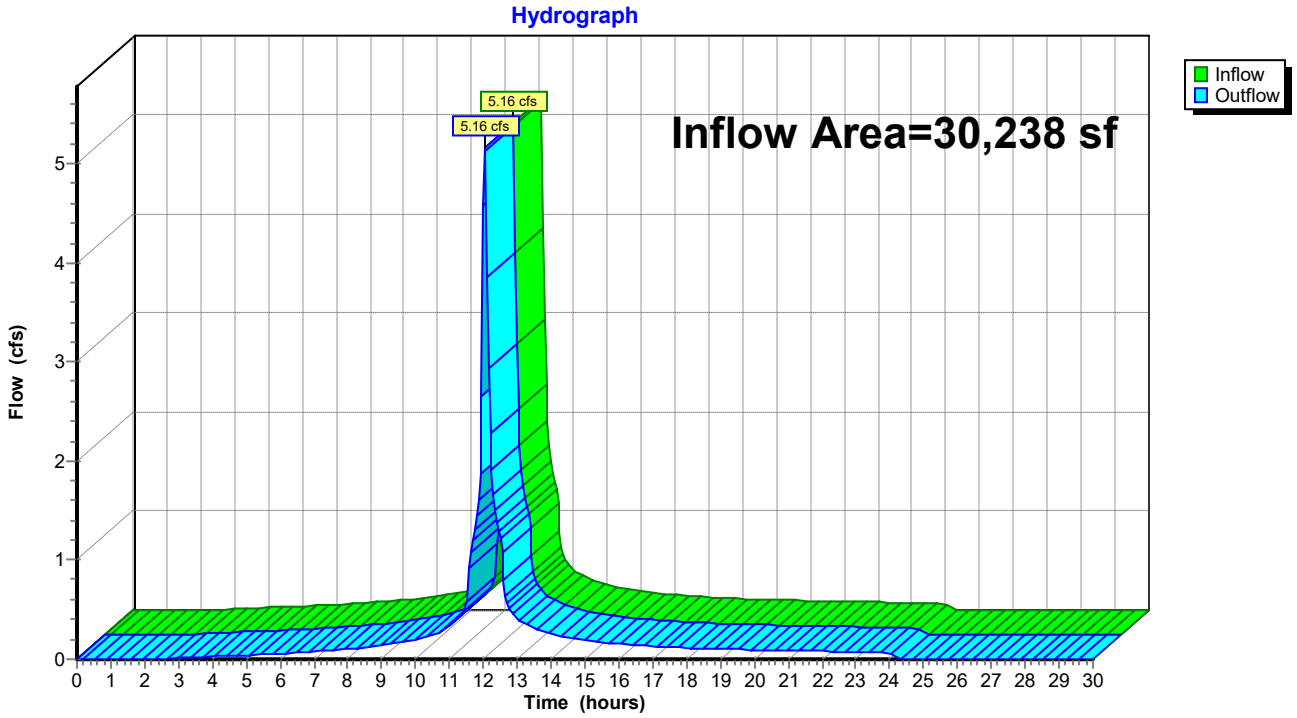

Summary for Reach DP-2: DP-2

[40] Hint: Not Described (Outflow=Inflow)

Inflow Area = 14,894 sf, 38.32% Impervious, Inflow Depth = 6.54" for 100-yr event
Inflow = 2.45 cfs @ 12.04 hrs, Volume= 8,123 cf
Outflow = 2.45 cfs @ 12.04 hrs, Volume= 8,123 cf, Atten= 0%, Lag= 0.0 min

Routing by Stor-Ind+Trans method, Time Span= 0.00-30.00 hrs, dt= 0.05 hrs

Reach DP-2: DP-2

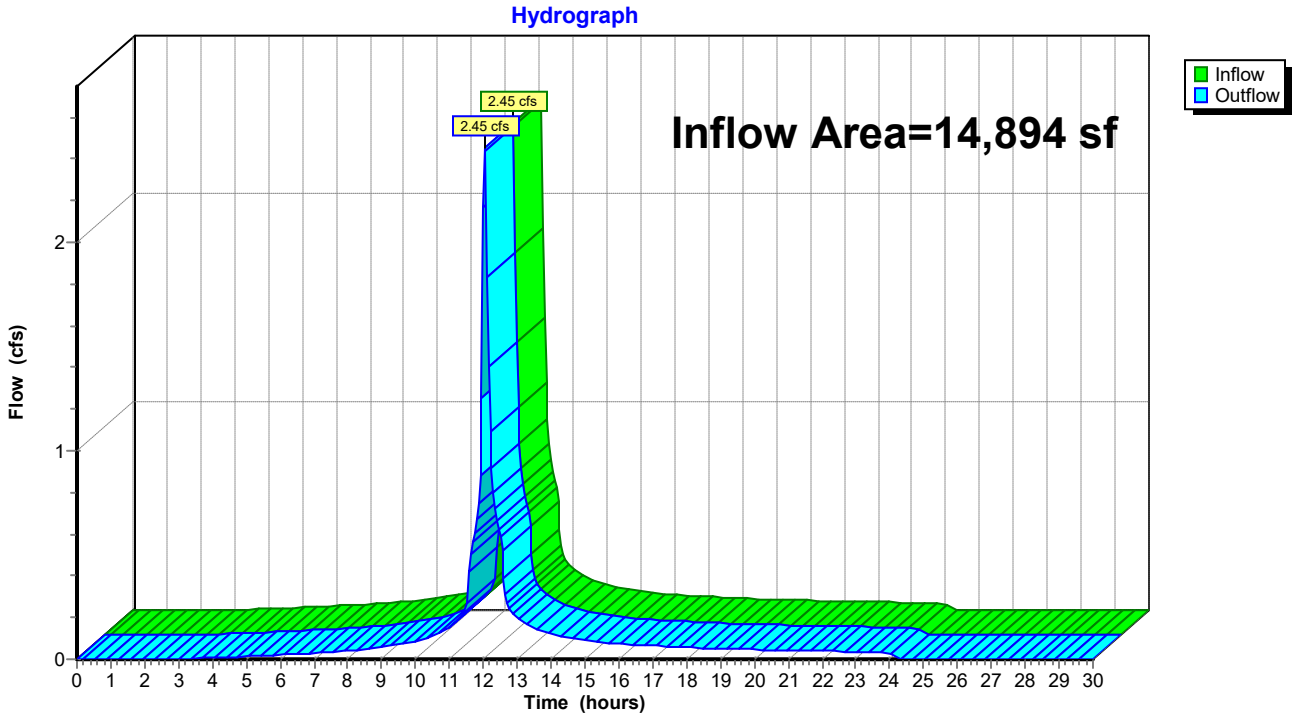

Summary for Reach DP-3: DP-3

[40] Hint: Not Described (Outflow=Inflow)

Inflow	=	0.00 cfs @	0.00 hrs, Volume=	0 cf
Outflow	=	0.00 cfs @	0.00 hrs, Volume=	0 cf, Atten= 0%, Lag= 0.0 min

Routing by Stor-Ind+Trans method, Time Span= 0.00-30.00 hrs, dt= 0.05 hrs

Reach DP-3: DP-3

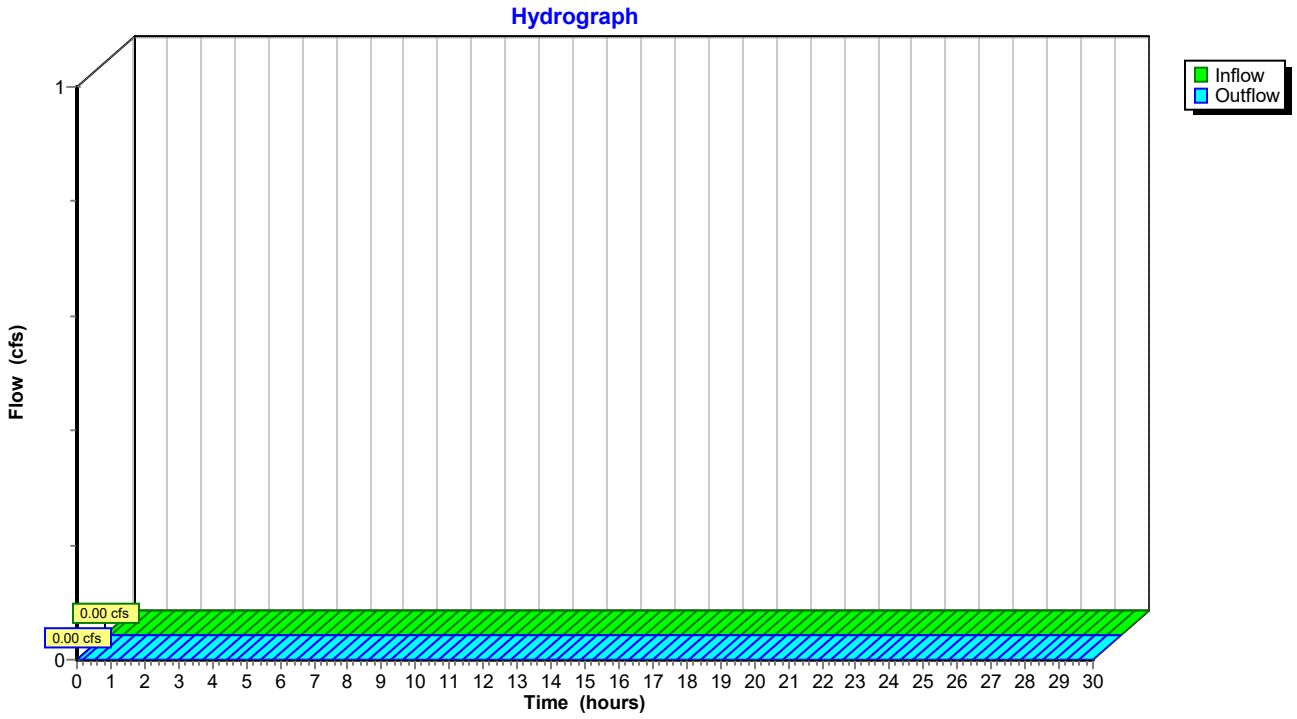

APPENDIX F

Post-Development Run-off Calculations

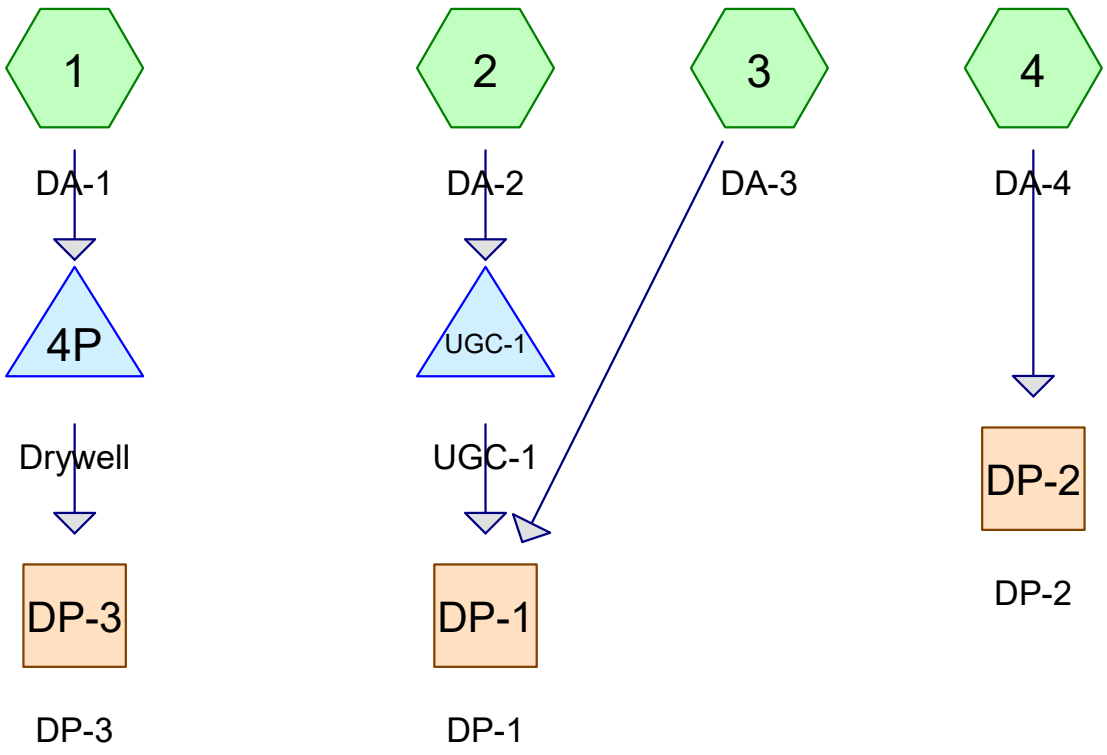

Subcat Reach Pond Link

Routing Diagram for 141 N Water_POST
Prepared by The LRC Group
HydroCAD® 10.20-6a s/n 02009 © 2024 HydroCAD Software Solutions LLC

Rainfall Events Listing (selected events)

Event#	Event Name	Storm Type	Curve	Mode	Duration (hours)	B/B	Depth (inches)	AMC
1	1-yr	NY-Poughkeepsie 24-hr S1	1-yr	Default	24.00	1	2.61	2
2	2-yr	NY-Poughkeepsie 24-hr S1	2-yr	Default	24.00	1	3.16	2
3	10-yr	NY-Poughkeepsie 24-hr S1	10-yr	Default	24.00	1	4.68	2
4	100-yr	NY-Poughkeepsie 24-hr S1	100-yr	Default	24.00	1	8.22	2

Area Listing (all nodes)

Area (sq-ft)	CN	Description (subcatchment-numbers)
9,618	69	50-75% Grass cover, Fair, HSG B (3)
4,930	61	>75% Grass cover, Good, HSG B (1, 2, 4)
12,884	98	Paved parking, HSG B (1, 2)
917	80	Pervious Pavers (3)
16,877	98	Roofs, HSG B (1)
45,226	**87**	**TOTAL AREA**

Soil Listing (all nodes)

Area (sq-ft)	Soil Group	Subcatchment Numbers
0	HSG A	
44,309	HSG B	1, 2, 3, 4
0	HSG C	
0	HSG D	
917	Other	3
45,226		**TOTAL AREA**

Ground Covers (all nodes)

HSG-A (sq-ft)	HSG-B (sq-ft)	HSG-C (sq-ft)	HSG-D (sq-ft)	Other (sq-ft)	Total (sq-ft)	Ground Cover	Su Nu
0	9,618	0	0	0	9,618	50-75% Grass cover, Fair	
0	4,930	0	0	0	4,930	>75% Grass cover, Good	
0	12,884	0	0	0	12,884	Paved parking	
0	0	0	0	917	917	Pervious Pavers	
0	16,877	0	0	0	16,877	Roofs	
0	**44,309**	**0**	**0**	**917**	**45,226**	**TOTAL AREA**	

Pipe Listing (all nodes)

Line#	Node Number	In-Invert (feet)	Out-Invert (feet)	Length (feet)	Slope (ft/ft)	n	Width (inches)	Diam/Height (inches)	Inside-Fill (inches)	Node Name
1	4P	55.19	54.50	60.0	0.0115	0.010	0.0	6.0	0.0	
2	UGC-1	41.00	40.90	10.0	0.0100	0.010	0.0	12.0	0.0	

Time span=0.00-30.00 hrs, dt=0.05 hrs, 601 points
Runoff by SCS TR-20 method, UH=SCS, Weighted-CN
Reach routing by Stor-Ind+Trans method - Pond routing by Stor-Ind method

Subcatchment 1: DA-1 Runoff Area=24,139 sf 93.86% Impervious Runoff Depth=2.17"
Flow Length=346' Tc=6.0 min CN=96 Runoff=1.46 cfs 4,363 cf

Subcatchment 2: DA-2 Runoff Area=8,824 sf 80.51% Impervious Runoff Depth=1.71"
Flow Length=91' Tc=6.0 min CN=91 Runoff=0.44 cfs 1,258 cf

Subcatchment 3: DA-3 Runoff Area=10,535 sf 0.00% Impervious Runoff Depth=0.51"
Tc=6.0 min CN=70 Runoff=0.12 cfs 447 cf

Subcatchment 4: DA-4 Runoff Area=1,728 sf 0.00% Impervious Runoff Depth=0.23"
Tc=6.0 min CN=61 Runoff=0.00 cfs 33 cf

Reach DP-1: DP-1 Inflow=0.12 cfs 447 cf
Outflow=0.12 cfs 447 cf

Reach DP-2: DP-2 Inflow=0.00 cfs 33 cf
Outflow=0.00 cfs 33 cf

Reach DP-3: DP-3 Inflow=0.00 cfs 0 cf
Outflow=0.00 cfs 0 cf

Pond 4P: Drywell Peak Elev=54.11' Storage=2,042 cf Inflow=1.46 cfs 4,363 cf
Discarded=0.05 cfs 4,351 cf Primary=0.00 cfs 0 cf Outflow=0.05 cfs 4,351 cf

Pond UGC-1: UGC-1 Peak Elev=40.42' Storage=256 cf Inflow=0.44 cfs 1,258 cf
Discarded=0.11 cfs 1,258 cf Primary=0.00 cfs 0 cf Outflow=0.11 cfs 1,258 cf

Total Runoff Area = 45,226 sf Runoff Volume = 6,101 cf Average Runoff Depth = 1.62"
34.19% Pervious = 15,465 sf 65.81% Impervious = 29,761 sf

Summary for Subcatchment 1: DA-1

Runoff = 1.46 cfs @ 12.04 hrs, Volume= 4,363 cf, Depth= 2.17"
Routed to Pond 4P : Drywell

Runoff by SCS TR-20 method, UH=SCS, Weighted-CN, Time Span= 0.00-30.00 hrs, dt= 0.05 hrs
NY-Poughkeepsie 24-hr S1 1-yr Rainfall=2.61"

Area (sf)	CN	Description
1,482	61	>75% Grass cover, Good, HSG B
16,877	98	Roofs, HSG B
5,780	98	Paved parking, HSG B
24,139	96	Weighted Average
1,482		6.14% Pervious Area
22,657		93.86% Impervious Area

Tc (min)	Length (feet)	Slope (ft/ft)	Velocity (ft/sec)	Capacity (cfs)	Description
2.2	100	0.0179	0.75		**Sheet Flow, A-B** n= 0.022 P2= 3.16"
0.6	93	0.0290	2.74		**Shallow Concentrated Flow, B-C** Unpaved Kv= 16.1 fps
0.7	153	0.2550	3.53		**Shallow Concentrated Flow, C-D** Short Grass Pasture Kv= 7.0 fps
3.5	346	Total, Increased to minimum Tc = 6.0 min			

Subcatchment 1: DA-1

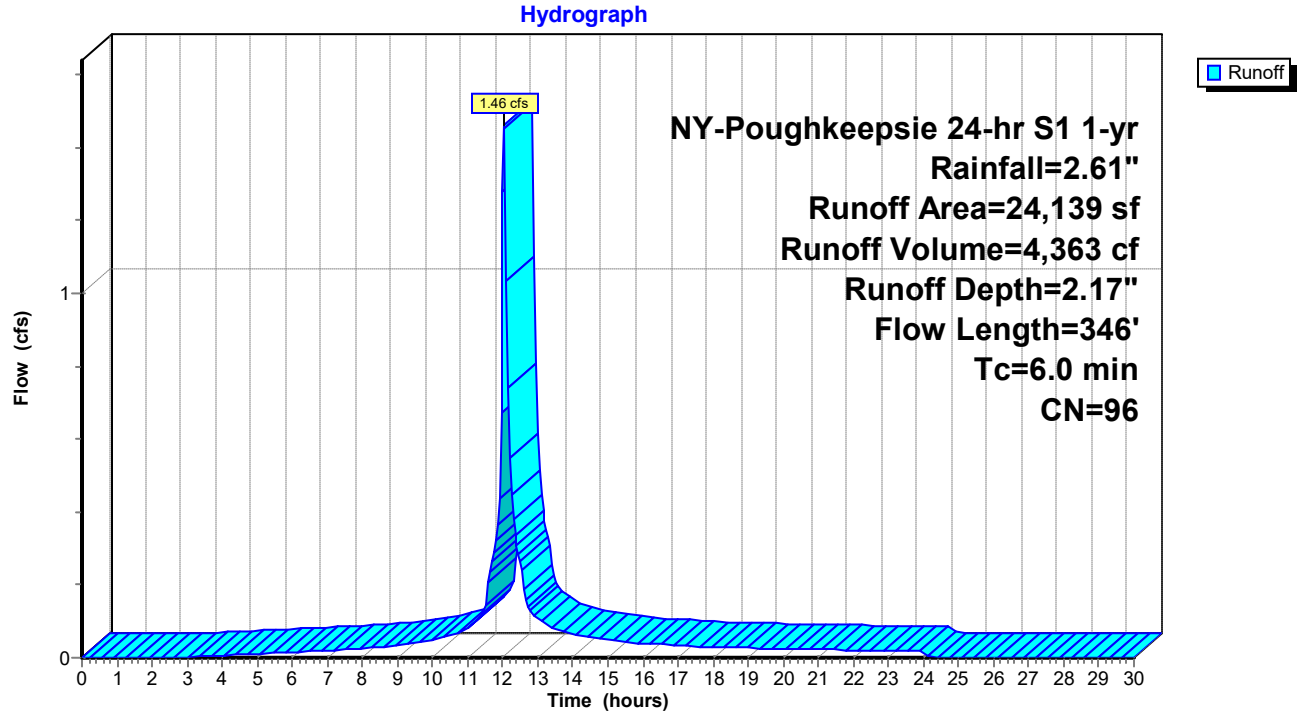

Summary for Subcatchment 2: DA-2

Runoff = 0.44 cfs @ 12.04 hrs, Volume= 1,258 cf, Depth= 1.71"
Routed to Pond UGC-1 : UGC-1

Runoff by SCS TR-20 method, UH=SCS, Weighted-CN, Time Span= 0.00-30.00 hrs, dt= 0.05 hrs
NY-Poughkeepsie 24-hr S1 1-yr Rainfall=2.61"

Area (sf)	CN	Description
1,720	61	>75% Grass cover, Good, HSG B
7,104	98	Paved parking, HSG B
8,824	91	Weighted Average
1,720		19.49% Pervious Area
7,104		80.51% Impervious Area

Tc (min)	Length (feet)	Slope (ft/ft)	Velocity (ft/sec)	Capacity (cfs)	Description
1.5	81	0.0310	0.90		**Sheet Flow, A-B** n= 0.022 P2= 3.16"
0.1	10	0.5000	3.13		**Sheet Flow, B-C** Smooth surfaces n= 0.011 P2= 3.16"
1.6	91	Total, Increased to minimum Tc = 6.0 min			

Subcatchment 2: DA-2

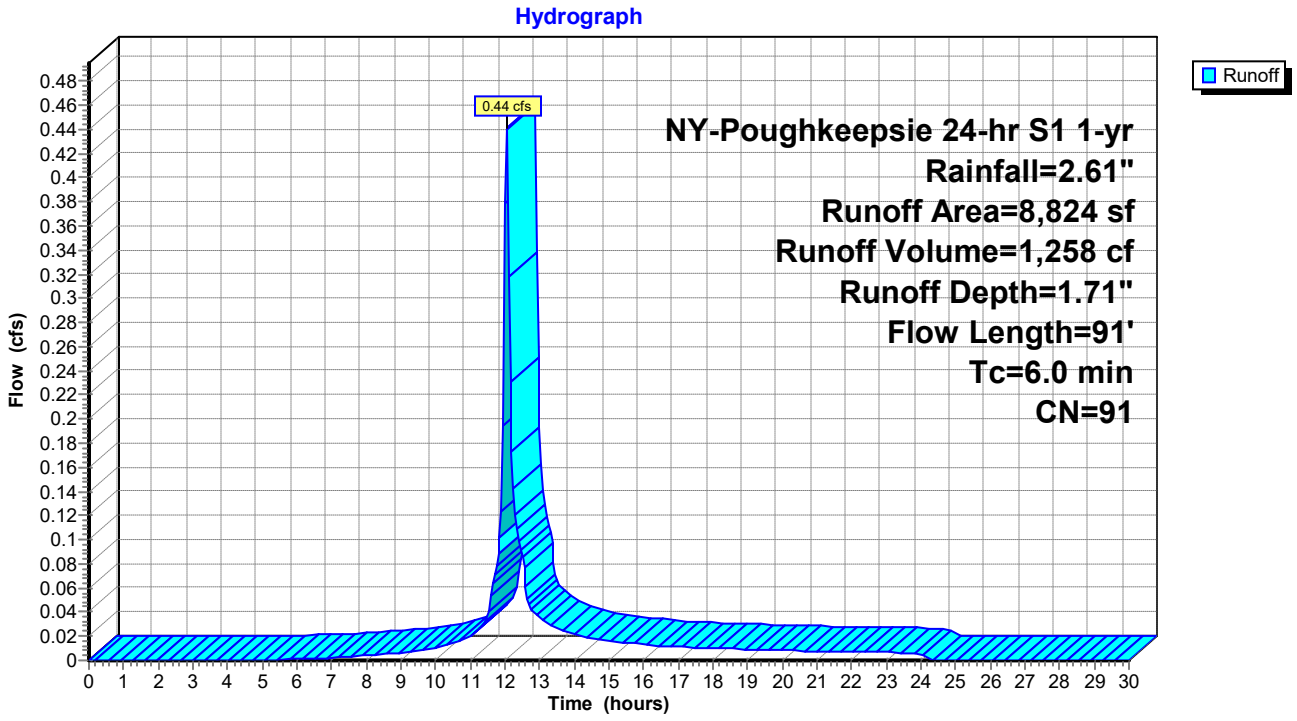

Summary for Subcatchment 3: DA-3

Runoff = 0.12 cfs @ 12.06 hrs, Volume= 447 cf, Depth= 0.51"
Routed to Reach DP-1 : DP-1

Runoff by SCS TR-20 method, UH=SCS, Weighted-CN, Time Span= 0.00-30.00 hrs, dt= 0.05 hrs
NY-Poughkeepsie 24-hr S1 1-yr Rainfall=2.61"

	Area (sf)	CN	Description
	9,618	69	50-75% Grass cover, Fair, HSG B
*	917	80	Pervious Pavers
	10,535	70	Weighted Average
	10,535		100.00% Pervious Area

Tc (min)	Length (feet)	Slope (ft/ft)	Velocity (ft/sec)	Capacity (cfs)	Description
6.0					**Direct Entry, Min. Tc**

Subcatchment 3: DA-3

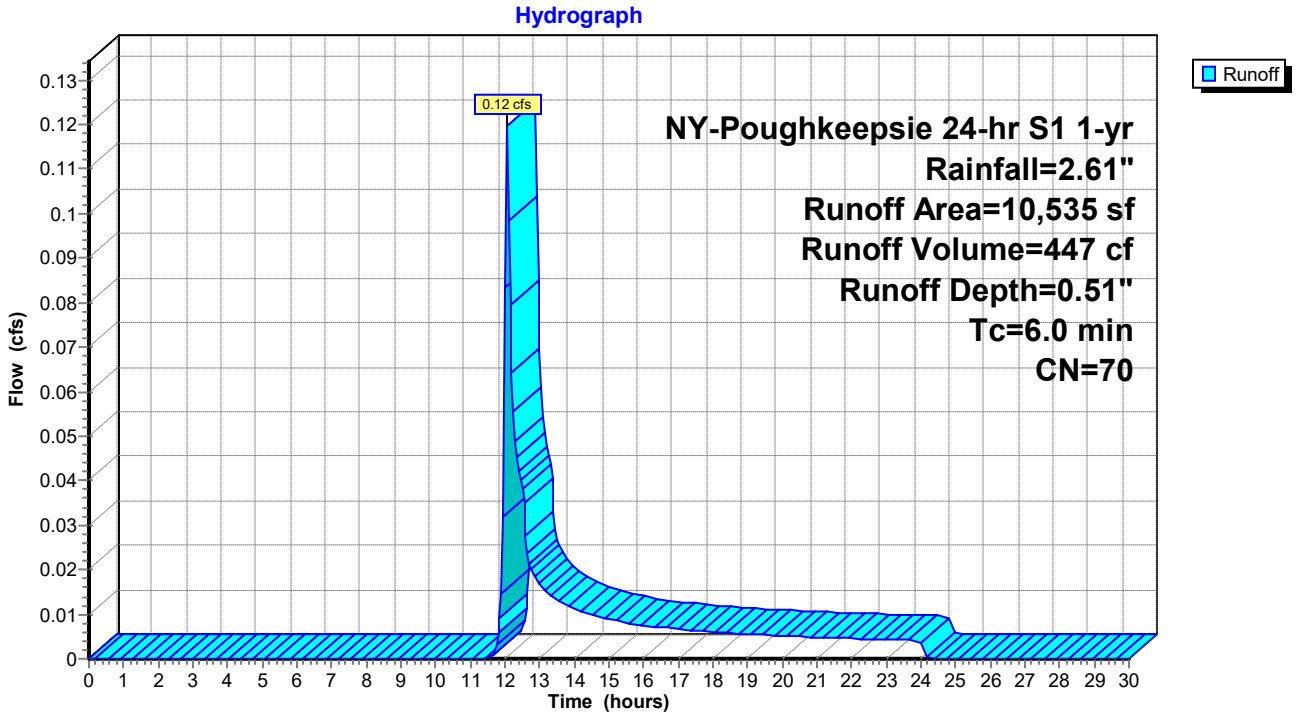

Summary for Subcatchment 4: DA-4

Runoff = 0.00 cfs @ 12.16 hrs, Volume= 33 cf, Depth= 0.23"
Routed to Reach DP-2 : DP-2

Runoff by SCS TR-20 method, UH=SCS, Weighted-CN, Time Span= 0.00-30.00 hrs, dt= 0.05 hrs
NY-Poughkeepsie 24-hr S1 1-yr Rainfall=2.61"

Area (sf)	CN	Description
1,728	61	>75% Grass cover, Good, HSG B
1,728		100.00% Pervious Area

Tc (min)	Length (feet)	Slope (ft/ft)	Velocity (ft/sec)	Capacity (cfs)	Description
6.0					**Direct Entry, Min. Tc**

Subcatchment 4: DA-4

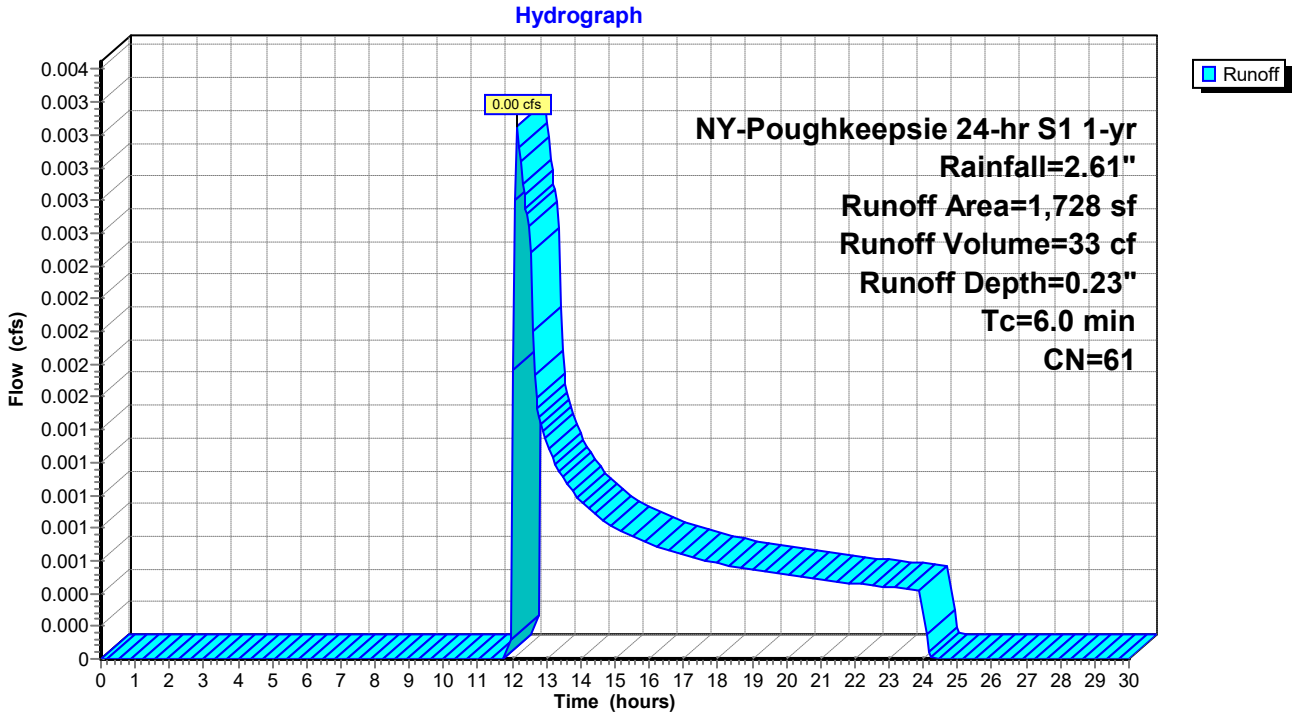

Summary for Reach DP-1: DP-1

[40] Hint: Not Described (Outflow=Inflow)

Inflow Area = 19,359 sf, 36.70% Impervious, Inflow Depth = 0.28" for 1-yr event
Inflow = 0.12 cfs @ 12.06 hrs, Volume= 447 cf
Outflow = 0.12 cfs @ 12.06 hrs, Volume= 447 cf, Atten= 0%, Lag= 0.0 min

Routing by Stor-Ind+Trans method, Time Span= 0.00-30.00 hrs, dt= 0.05 hrs

Reach DP-1: DP-1

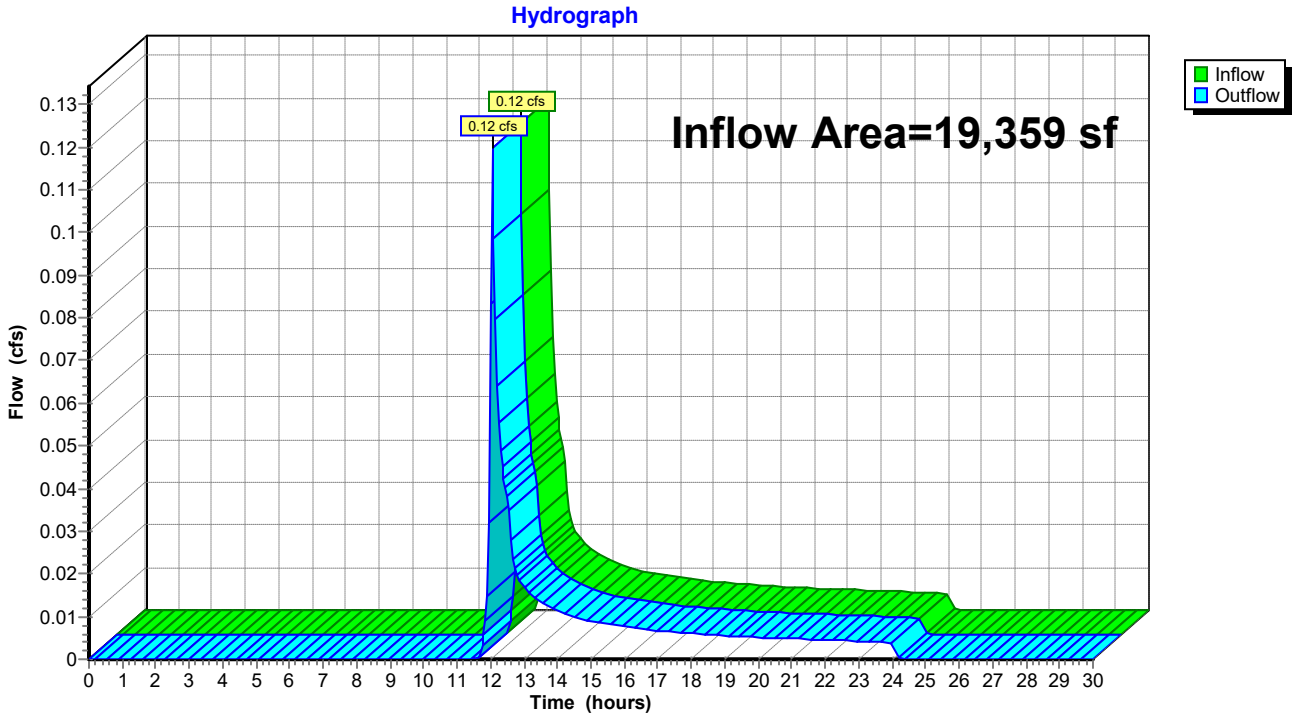

Summary for Reach DP-2: DP-2

[40] Hint: Not Described (Outflow=Inflow)

Inflow Area = 1,728 sf, 0.00% Impervious, Inflow Depth = 0.23" for 1-yr event
Inflow = 0.00 cfs @ 12.16 hrs, Volume= 33 cf
Outflow = 0.00 cfs @ 12.16 hrs, Volume= 33 cf, Atten= 0%, Lag= 0.0 min

Routing by Stor-Ind+Trans method, Time Span= 0.00-30.00 hrs, dt= 0.05 hrs

Reach DP-2: DP-2

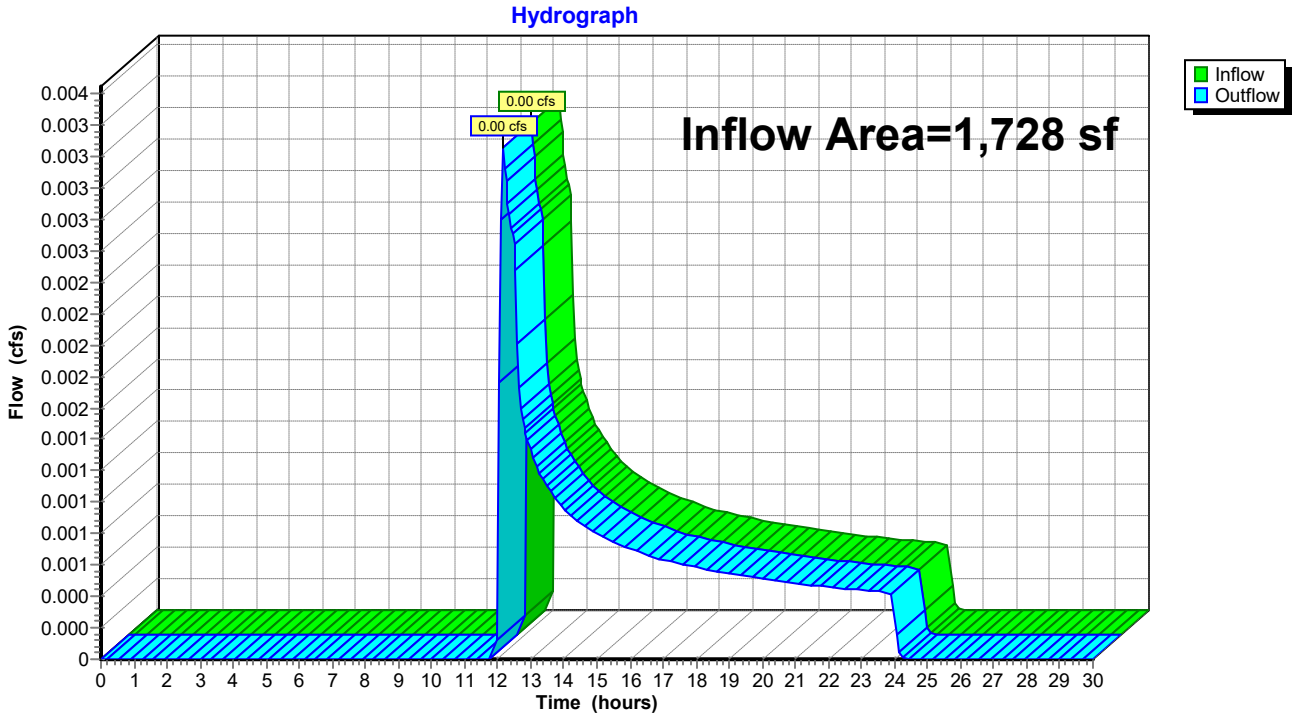

Summary for Reach DP-3: DP-3

[40] Hint: Not Described (Outflow=Inflow)

Inflow Area = 24,139 sf, 93.86% Impervious, Inflow Depth = 0.00" for 1-yr event
Inflow = 0.00 cfs @ 0.00 hrs, Volume= 0 cf
Outflow = 0.00 cfs @ 0.00 hrs, Volume= 0 cf, Atten= 0%, Lag= 0.0 min

Routing by Stor-Ind+Trans method, Time Span= 0.00-30.00 hrs, dt= 0.05 hrs

Reach DP-3: DP-3

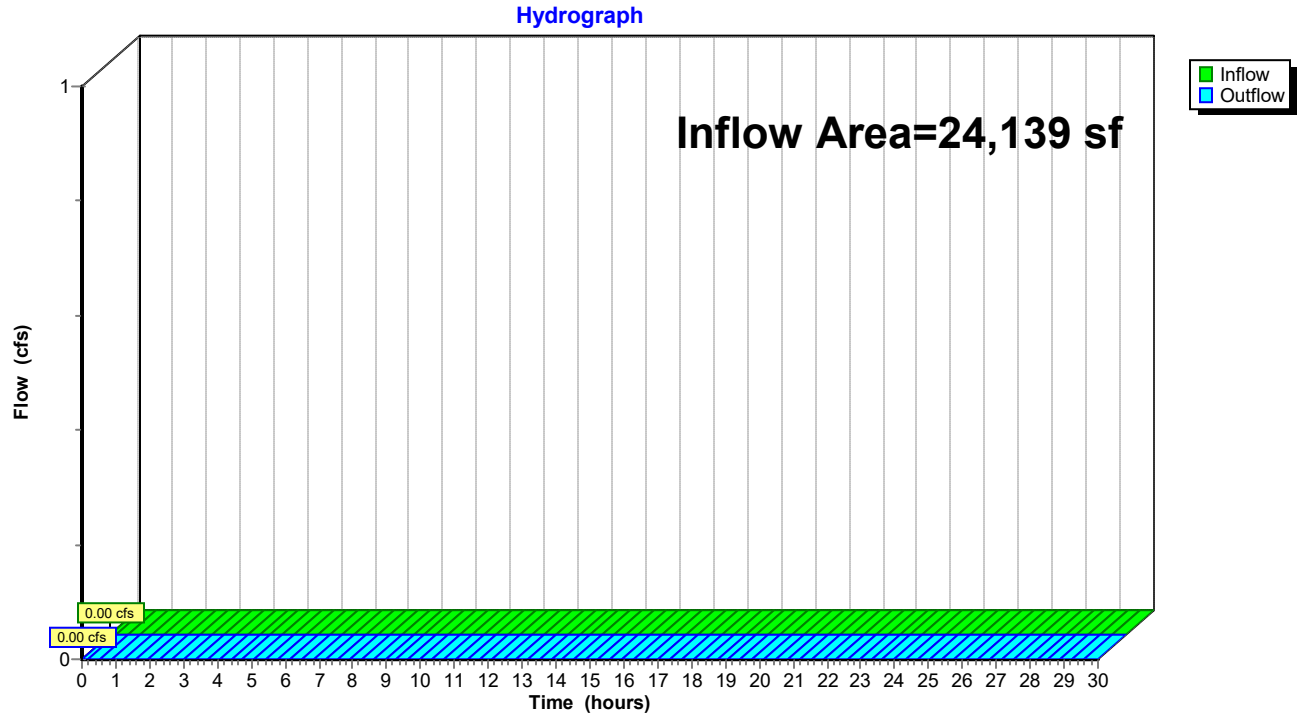

Summary for Pond 4P: Drywell

Inflow Area = 24,139 sf, 93.86% Impervious, Inflow Depth = 2.17" for 1-yr event
Inflow = 1.46 cfs @ 12.04 hrs, Volume= 4,363 cf
Outflow = 0.05 cfs @ 10.55 hrs, Volume= 4,351 cf, Atten= 96%, Lag= 0.0 min
Discarded = 0.05 cfs @ 10.55 hrs, Volume= 4,351 cf
Primary = 0.00 cfs @ 0.00 hrs, Volume= 0 cf
Routed to Reach DP-3 : DP-3

Routing by Stor-Ind method, Time Span= 0.00-30.00 hrs, dt= 0.05 hrs
Peak Elev= 54.11' @ 14.50 hrs Surf.Area= 2,370 sf Storage= 2,042 cf

Plug-Flow detention time= 337.2 min calculated for 4,351 cf (100% of inflow)
Center-of-Mass det. time= 335.5 min (1,121.6 - 786.2)

Volume	Invert	Avail.Storage	Storage Description
#1	52.50'	4,390 cf	**Custom Stage Data (Prismatic)** Listed below (Recalc) 13,414 cf Overall - 2,439 cf Embedded = 10,975 cf x 40.0% Voids
#2	53.41'	2,439 cf	**ADS_StormTech SC-800 +Cap** x 47 Inside #1 Effective Size= 45.0"W x 33.0"H => 7.11 sf x 7.12'L = 50.6 cf Overall Size= 51.0"W x 33.0"H x 7.55'L with 0.43' Overlap 47 Chambers in 9 Rows Cap Storage= 3.4 cf x 2 x 9 rows = 61.6 cf
		6,829 cf	Total Available Storage

Elevation (feet)	Surf.Area (sq-ft)	Inc.Store (cubic-feet)	Cum.Store (cubic-feet)
52.50	2,370	0	0
58.16	2,370	13,414	13,414

Device	Routing	Invert	Outlet Devices
#1	Primary	55.19'	**6.0" Round Culvert** L= 60.0' CMP, projecting, no headwall, Ke= 0.900 Inlet / Outlet Invert= 55.19' / 54.50' S= 0.0115 '/' Cc= 0.900 n= 0.010, Flow Area= 0.20 sf
#2	Discarded	52.50'	**1.000 in/hr Exfiltration over Surface area**

Discarded OutFlow Max=0.05 cfs @ 10.55 hrs HW=52.56' (Free Discharge)
↑—**2=Exfiltration** (Exfiltration Controls 0.05 cfs)

Primary OutFlow Max=0.00 cfs @ 0.00 hrs HW=52.50' (Free Discharge)
↑—**1=Culvert** (Controls 0.00 cfs)

Pond 4P: Drywell

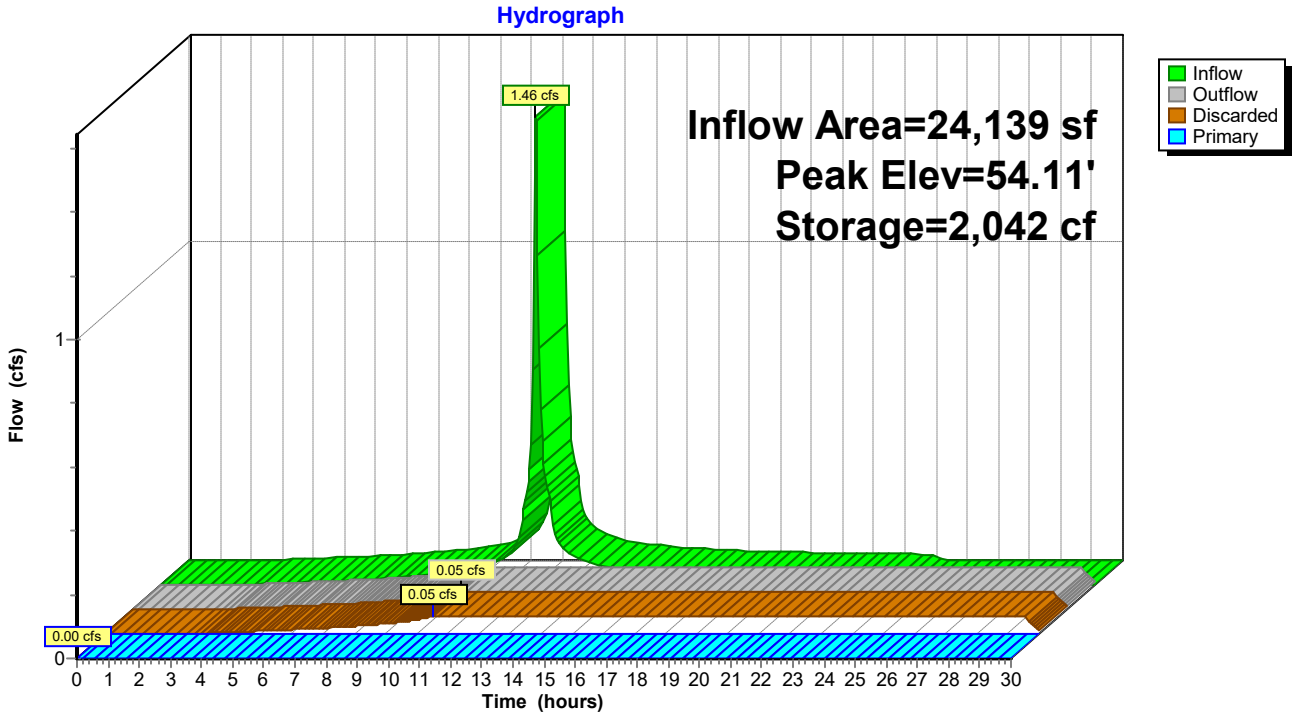

Pond 4P: Drywell

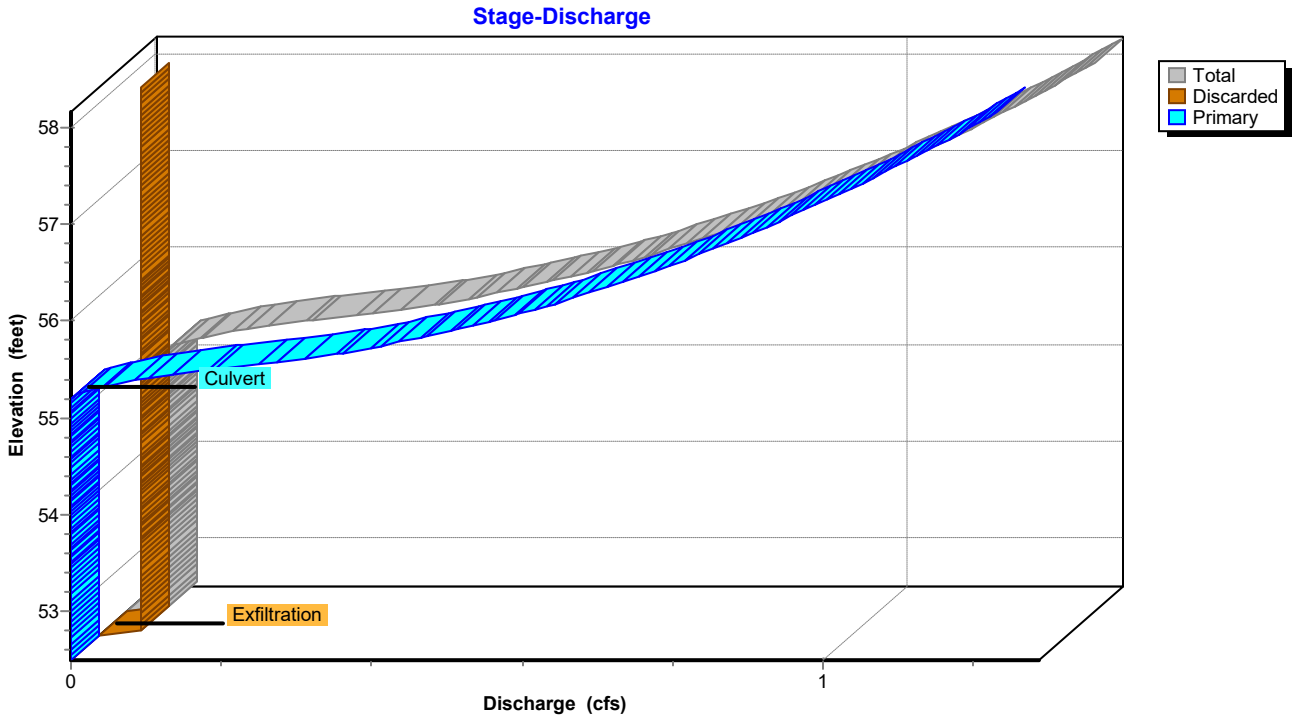

Stage-Area-Storage for Pond 4P: Drywell

Elevation (feet)	Surface (sq-ft)	Storage (cubic-feet)
52.50	**2,370**	0
52.60	2,370	95
52.70	2,370	190
52.80	2,370	284
52.90	2,370	379
53.00	2,370	474
53.10	2,370	569
53.20	2,370	664
53.30	2,370	758
53.40	2,370	853
53.50	2,370	1,017
53.60	2,370	1,188
53.70	2,370	1,358
53.80	2,370	1,528
53.90	2,370	1,696
54.00	2,370	1,863
54.10	2,370	2,029
54.20	2,370	2,194
54.30	2,370	2,357
54.40	2,370	2,519
54.50	2,370	2,680
54.60	2,370	2,839
54.70	2,370	2,996
54.80	2,370	3,151
54.90	2,370	3,304
55.00	2,370	3,455
55.10	2,370	3,604
55.20	2,370	3,750
55.30	2,370	3,894
55.40	2,370	4,034
55.50	2,370	4,171
55.60	2,370	4,304
55.70	2,370	4,432
55.80	2,370	4,554
55.90	2,370	4,669
56.00	2,370	4,775
56.10	2,370	4,875
56.20	2,370	4,971
56.30	2,370	5,066
56.40	2,370	5,161
56.50	2,370	5,256
56.60	2,370	5,350
56.70	2,370	5,445
56.80	2,370	5,540
56.90	2,370	5,635
57.00	2,370	5,730
57.10	2,370	5,824
57.20	2,370	5,919
57.30	2,370	6,014
57.40	2,370	6,109
57.50	2,370	6,204
57.60	2,370	6,298
57.70	2,370	6,393
57.80	2,370	6,488
57.90	2,370	6,583
58.00	2,370	6,678
58.10	2,370	**6,772**

Summary for Pond UGC-1: UGC-1

Inflow Area = 8,824 sf, 80.51% Impervious, Inflow Depth = 1.71" for 1-yr event
Inflow = 0.44 cfs @ 12.04 hrs, Volume= 1,258 cf
Outflow = 0.11 cfs @ 11.95 hrs, Volume= 1,258 cf, Atten= 76%, Lag= 0.0 min
Discarded = 0.11 cfs @ 11.95 hrs, Volume= 1,258 cf
Primary = 0.00 cfs @ 0.00 hrs, Volume= 0 cf
Routed to Reach DP-1 : DP-1

Routing by Stor-Ind method, Time Span= 0.00-30.00 hrs, dt= 0.05 hrs
Peak Elev= 40.42' @ 12.37 hrs Surf.Area= 608 sf Storage= 256 cf

Plug-Flow detention time= 17.1 min calculated for 1,256 cf (100% of inflow)
Center-of-Mass det. time= 17.1 min (839.9 - 822.8)

Volume	Invert	Avail.Storage	Storage Description
#1	40.00'	5,472 cf	**Custom Stage Data (Prismatic)** Listed below (Recalc)

Elevation (feet)	Surf.Area (sq-ft)	Inc.Store (cubic-feet)	Cum.Store (cubic-feet)
40.00	608	0	0
49.00	608	5,472	5,472

Device	Routing	Invert	Outlet Devices
#1	Discarded	40.00'	**7.500 in/hr Exfiltration over Surface area**
#2	Primary	41.00'	**12.0" Round Culvert** L= 10.0' CMP, projecting, no headwall, Ke= 0.900 Inlet / Outlet Invert= 41.00' / 40.90' S= 0.0100 '/' Cc= 0.900 n= 0.010, Flow Area= 0.79 sf

Discarded OutFlow Max=0.11 cfs @ 11.95 hrs HW=40.09' (Free Discharge)
↑**1=Exfiltration** (Exfiltration Controls 0.11 cfs)

Primary OutFlow Max=0.00 cfs @ 0.00 hrs HW=40.00' (Free Discharge)
↑**2=Culvert** (Controls 0.00 cfs)

Pond UGC-1: UGC-1

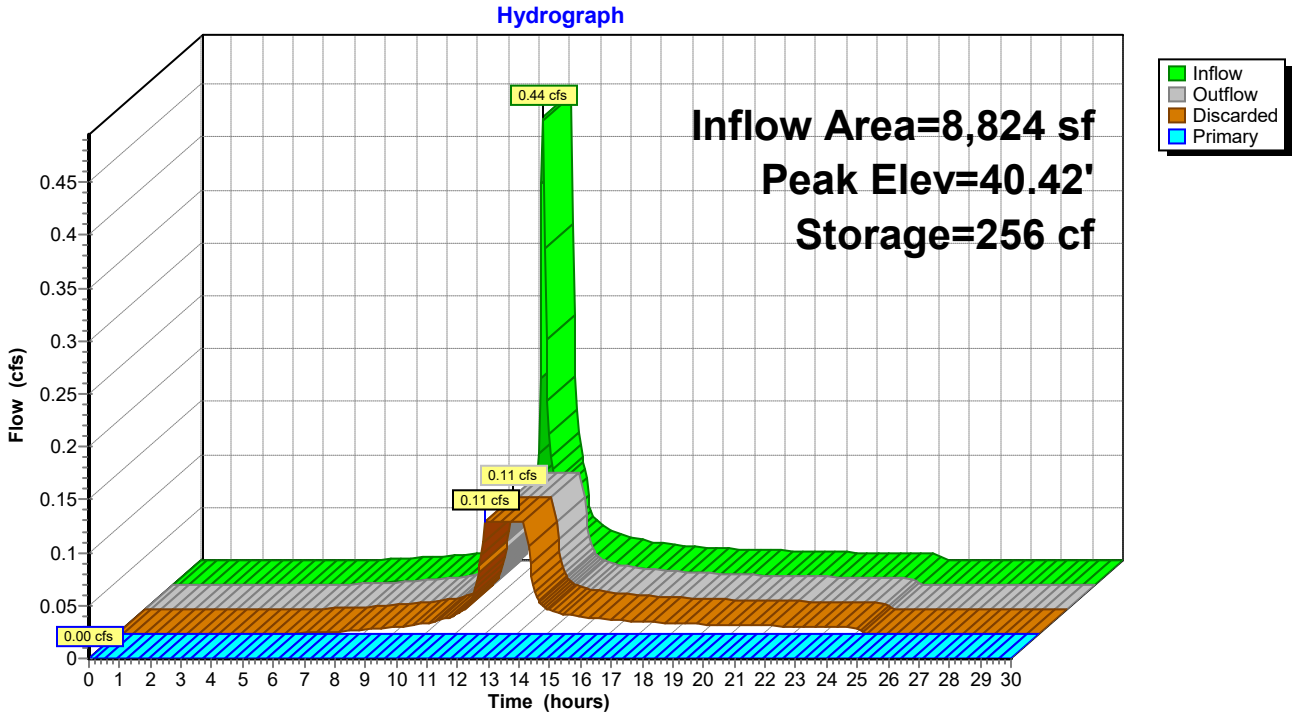

Pond UGC-1: UGC-1

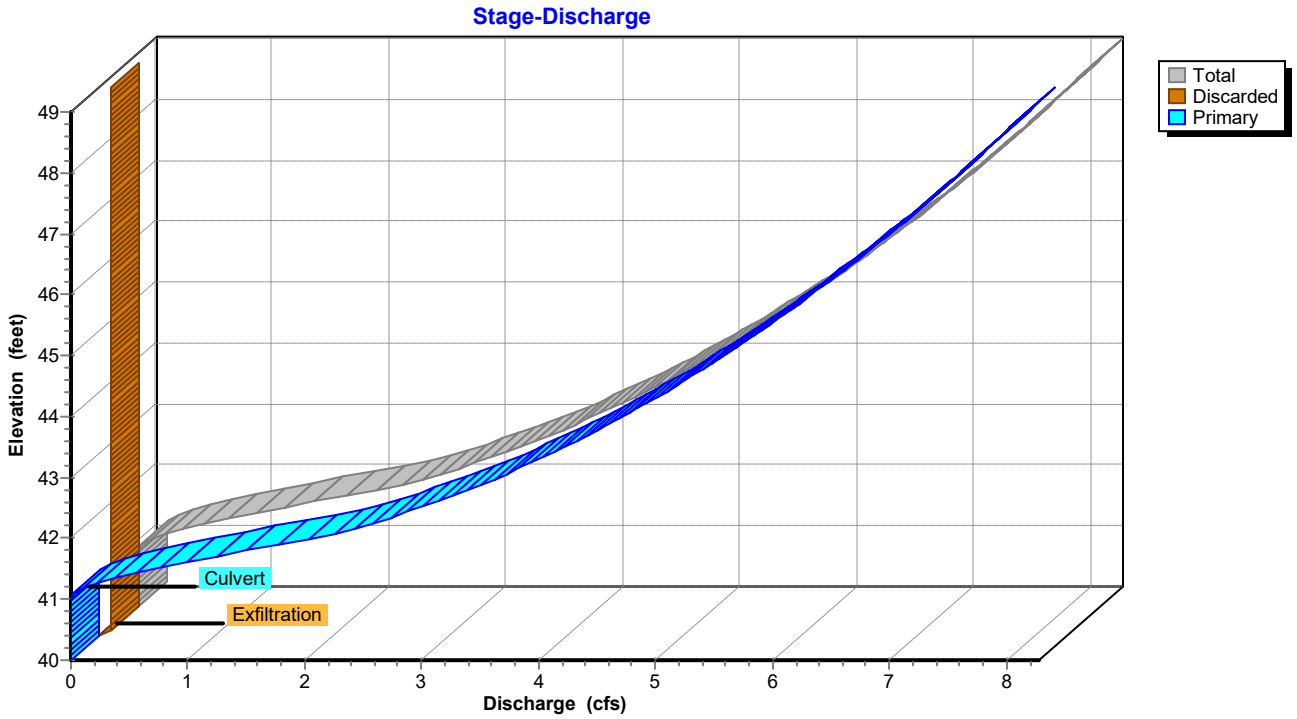

Stage-Area-Storage for Pond UGC-1: UGC-1

Elevation (feet)	Surface (sq-ft)	Storage (cubic-feet)
40.00	**608**	0
40.10	608	61
40.20	608	122
40.30	608	182
40.40	608	243
40.50	608	304
40.60	608	365
40.70	608	426
40.80	608	486
40.90	608	547
41.00	608	608
41.10	608	669
41.20	608	730
41.30	608	790
41.40	608	851
41.50	608	912
41.60	608	973
41.70	608	1,034
41.80	608	1,094
41.90	608	1,155
42.00	608	1,216
42.10	608	1,277
42.20	608	1,338
42.30	608	1,398
42.40	608	1,459
42.50	608	1,520
42.60	608	1,581
42.70	608	1,642
42.80	608	1,702
42.90	608	1,763
43.00	608	1,824
43.10	608	1,885
43.20	608	1,946
43.30	608	2,006
43.40	608	2,067
43.50	608	2,128
43.60	608	2,189
43.70	608	2,250
43.80	608	2,310
43.90	608	2,371
44.00	608	2,432
44.10	608	2,493
44.20	608	2,554
44.30	608	2,614
44.40	608	2,675
44.50	608	2,736
44.60	608	2,797
44.70	608	2,858
44.80	608	2,918
44.90	608	2,979
45.00	608	3,040
45.10	608	3,101
45.20	608	3,162
45.30	608	3,222
45.40	608	3,283
45.50	608	3,344
45.60	608	3,405
45.70	608	3,466
45.80	608	3,526
45.90	608	3,587
46.00	608	3,648
46.10	608	3,709
46.20	608	3,770
46.30	608	3,830
46.40	608	3,891
46.50	608	3,952
46.60	608	4,013
46.70	608	4,074
46.80	608	4,134
46.90	608	4,195
47.00	608	4,256
47.10	608	4,317
47.20	608	4,378
47.30	608	4,438
47.40	608	4,499
47.50	608	4,560
47.60	608	4,621
47.70	608	4,682
47.80	608	4,742
47.90	608	4,803
48.00	608	4,864
48.10	608	4,925
48.20	608	4,986
48.30	608	5,046
48.40	608	5,107
48.50	608	5,168
48.60	608	5,229
48.70	608	5,290
48.80	608	5,350
48.90	608	5,411
49.00	608	**5,472**

Time span=0.00-30.00 hrs, dt=0.05 hrs, 601 points
Runoff by SCS TR-20 method, UH=SCS, Weighted-CN
Reach routing by Stor-Ind+Trans method - Pond routing by Stor-Ind method

Subcatchment 1: DA-1 Runoff Area=24,139 sf 93.86% Impervious Runoff Depth=2.71"
Flow Length=346' Tc=6.0 min CN=96 Runoff=1.83 cfs 5,451 cf

Subcatchment 2: DA-2 Runoff Area=8,824 sf 80.51% Impervious Runoff Depth=2.22"
Flow Length=91' Tc=6.0 min CN=91 Runoff=0.58 cfs 1,633 cf

Subcatchment 3: DA-3 Runoff Area=10,535 sf 0.00% Impervious Runoff Depth=0.80"
Tc=6.0 min CN=70 Runoff=0.22 cfs 707 cf

Subcatchment 4: DA-4 Runoff Area=1,728 sf 0.00% Impervious Runoff Depth=0.43"
Tc=6.0 min CN=61 Runoff=0.01 cfs 62 cf

Reach DP-1: DP-1 Inflow=0.22 cfs 707 cf
Outflow=0.22 cfs 707 cf

Reach DP-2: DP-2 Inflow=0.01 cfs 62 cf
Outflow=0.01 cfs 62 cf

Reach DP-3: DP-3 Inflow=0.00 cfs 0 cf
Outflow=0.00 cfs 0 cf

Pond 4P: Drywell Peak Elev=54.55' Storage=2,764 cf Inflow=1.83 cfs 5,451 cf
Discarded=0.05 cfs 4,563 cf Primary=0.00 cfs 0 cf Outflow=0.05 cfs 4,563 cf

Pond UGC-1: UGC-1 Peak Elev=40.65' Storage=393 cf Inflow=0.58 cfs 1,633 cf
Discarded=0.11 cfs 1,633 cf Primary=0.00 cfs 0 cf Outflow=0.11 cfs 1,633 cf

Total Runoff Area = 45,226 sf Runoff Volume = 7,852 cf Average Runoff Depth = 2.08"
34.19% Pervious = 15,465 sf 65.81% Impervious = 29,761 sf

Summary for Subcatchment 1: DA-1

Runoff = 1.83 cfs @ 12.04 hrs, Volume= 5,451 cf, Depth= 2.71"
Routed to Pond 4P : Drywell

Runoff by SCS TR-20 method, UH=SCS, Weighted-CN, Time Span= 0.00-30.00 hrs, dt= 0.05 hrs
NY-Poughkeepsie 24-hr S1 2-yr Rainfall=3.16"

Area (sf)	CN	Description
1,482	61	>75% Grass cover, Good, HSG B
16,877	98	Roofs, HSG B
5,780	98	Paved parking, HSG B
24,139	96	Weighted Average
1,482		6.14% Pervious Area
22,657		93.86% Impervious Area

Tc (min)	Length (feet)	Slope (ft/ft)	Velocity (ft/sec)	Capacity (cfs)	Description
2.2	100	0.0179	0.75		**Sheet Flow, A-B** n= 0.022 P2= 3.16"
0.6	93	0.0290	2.74		**Shallow Concentrated Flow, B-C** Unpaved Kv= 16.1 fps
0.7	153	0.2550	3.53		**Shallow Concentrated Flow, C-D** Short Grass Pasture Kv= 7.0 fps
3.5	346	Total, Increased to minimum Tc = 6.0 min			

Subcatchment 1: DA-1

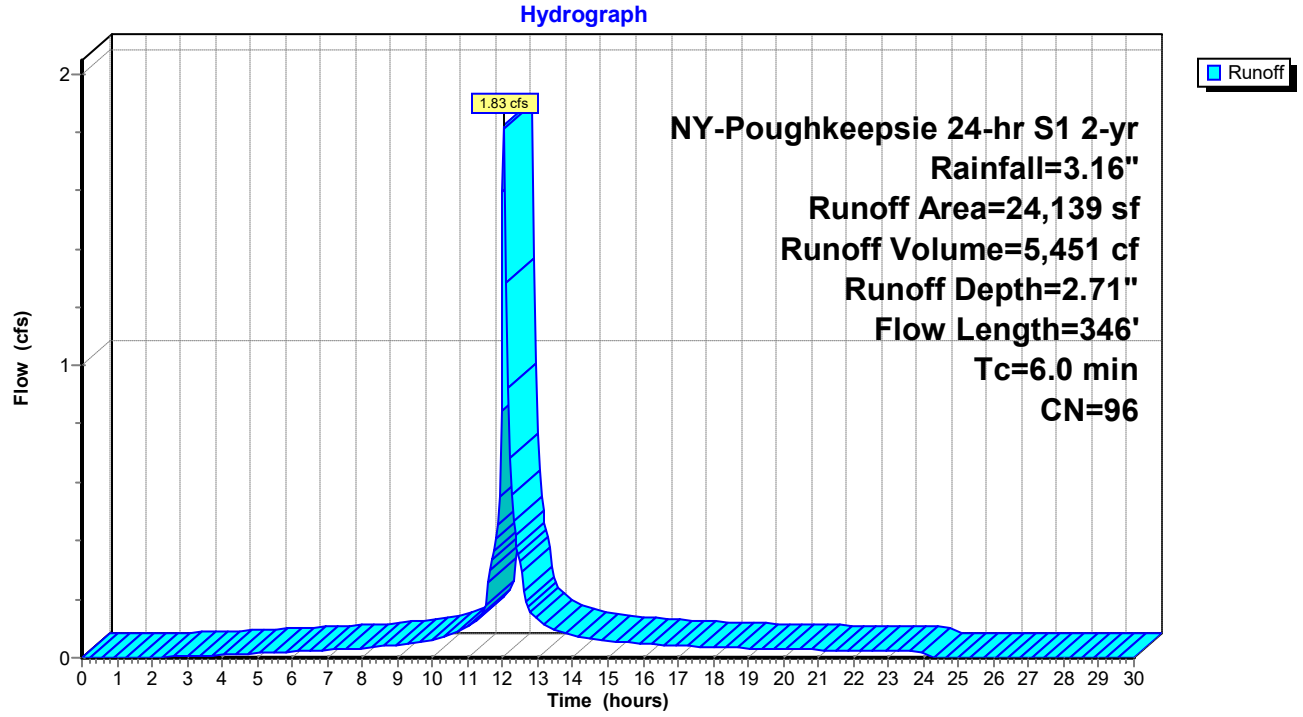

Summary for Subcatchment 2: DA-2

Runoff = 0.58 cfs @ 12.04 hrs, Volume= 1,633 cf, Depth= 2.22"
Routed to Pond UGC-1 : UGC-1

Runoff by SCS TR-20 method, UH=SCS, Weighted-CN, Time Span= 0.00-30.00 hrs, dt= 0.05 hrs
NY-Poughkeepsie 24-hr S1 2-yr Rainfall=3.16"

Area (sf)	CN	Description
1,720	61	>75% Grass cover, Good, HSG B
7,104	98	Paved parking, HSG B
8,824	91	Weighted Average
1,720		19.49% Pervious Area
7,104		80.51% Impervious Area

Tc (min)	Length (feet)	Slope (ft/ft)	Velocity (ft/sec)	Capacity (cfs)	Description
1.5	81	0.0310	0.90		**Sheet Flow, A-B** n= 0.022 P2= 3.16"
0.1	10	0.5000	3.13		**Sheet Flow, B-C** Smooth surfaces n= 0.011 P2= 3.16"
1.6	91	Total, Increased to minimum Tc = 6.0 min			

Subcatchment 2: DA-2

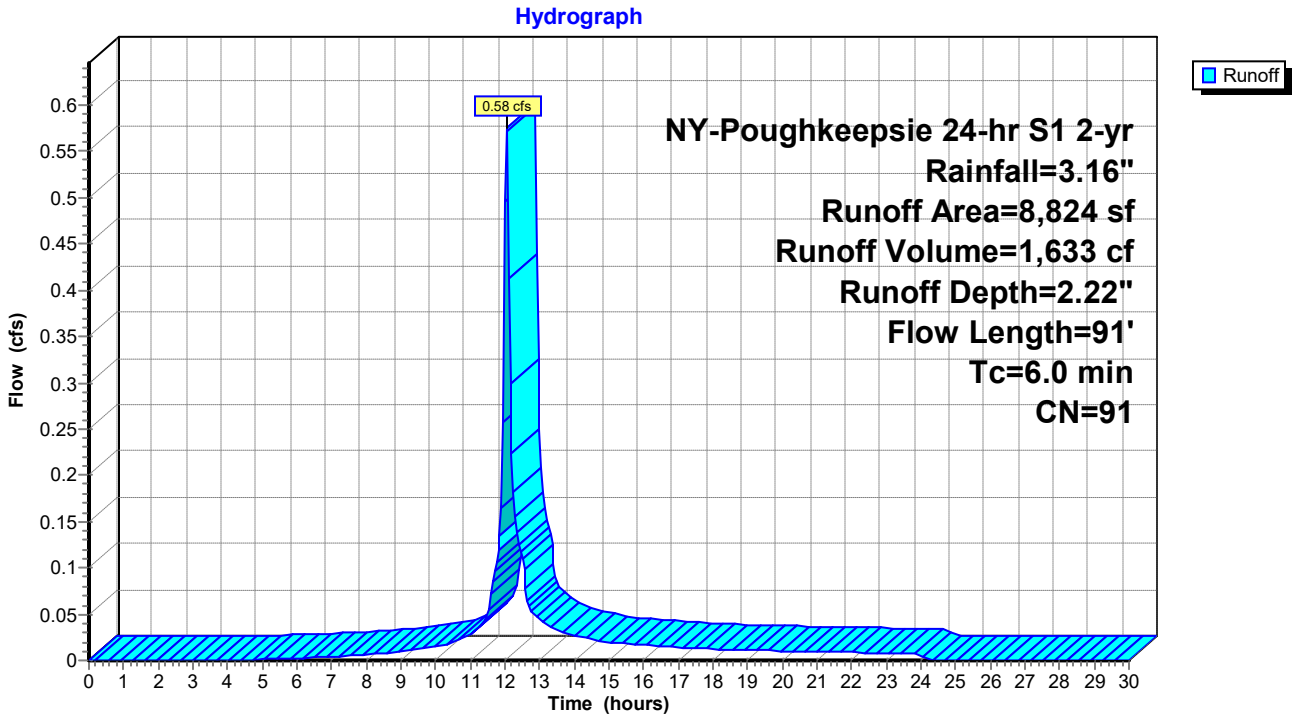

Summary for Subcatchment 3: DA-3

Runoff = 0.22 cfs @ 12.05 hrs, Volume= 707 cf, Depth= 0.80"
Routed to Reach DP-1 : DP-1

Runoff by SCS TR-20 method, UH=SCS, Weighted-CN, Time Span= 0.00-30.00 hrs, dt= 0.05 hrs
NY-Poughkeepsie 24-hr S1 2-yr Rainfall=3.16"

	Area (sf)	CN	Description
	9,618	69	50-75% Grass cover, Fair, HSG B
*	917	80	Pervious Pavers
	10,535	70	Weighted Average
	10,535		100.00% Pervious Area

Tc (min)	Length (feet)	Slope (ft/ft)	Velocity (ft/sec)	Capacity (cfs)	Description
6.0					**Direct Entry, Min. Tc**

Subcatchment 3: DA-3

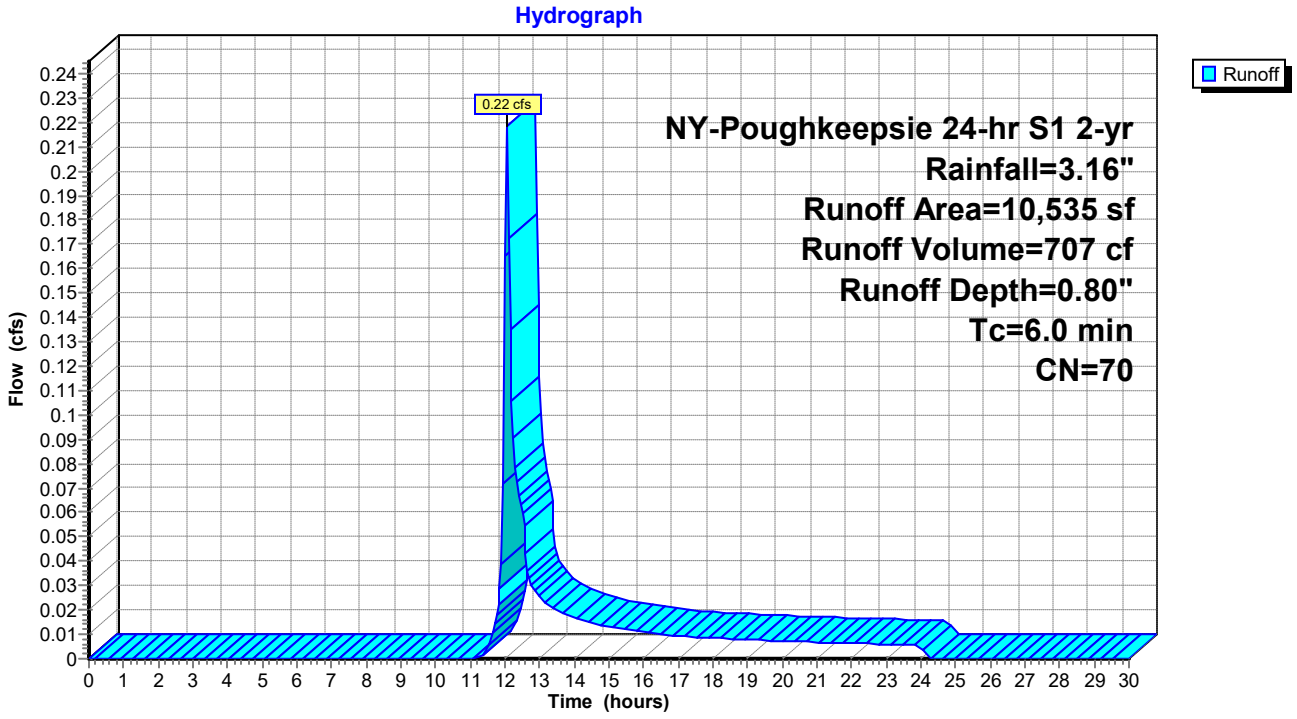

Summary for Subcatchment 4: DA-4

Runoff = 0.01 cfs @ 12.07 hrs, Volume= 62 cf, Depth= 0.43"
Routed to Reach DP-2 : DP-2

Runoff by SCS TR-20 method, UH=SCS, Weighted-CN, Time Span= 0.00-30.00 hrs, dt= 0.05 hrs
NY-Poughkeepsie 24-hr S1 2-yr Rainfall=3.16"

Area (sf)	CN	Description
1,728	61	>75% Grass cover, Good, HSG B
1,728		100.00% Pervious Area

Tc (min)	Length (feet)	Slope (ft/ft)	Velocity (ft/sec)	Capacity (cfs)	Description
6.0					**Direct Entry, Min. Tc**

Subcatchment 4: DA-4

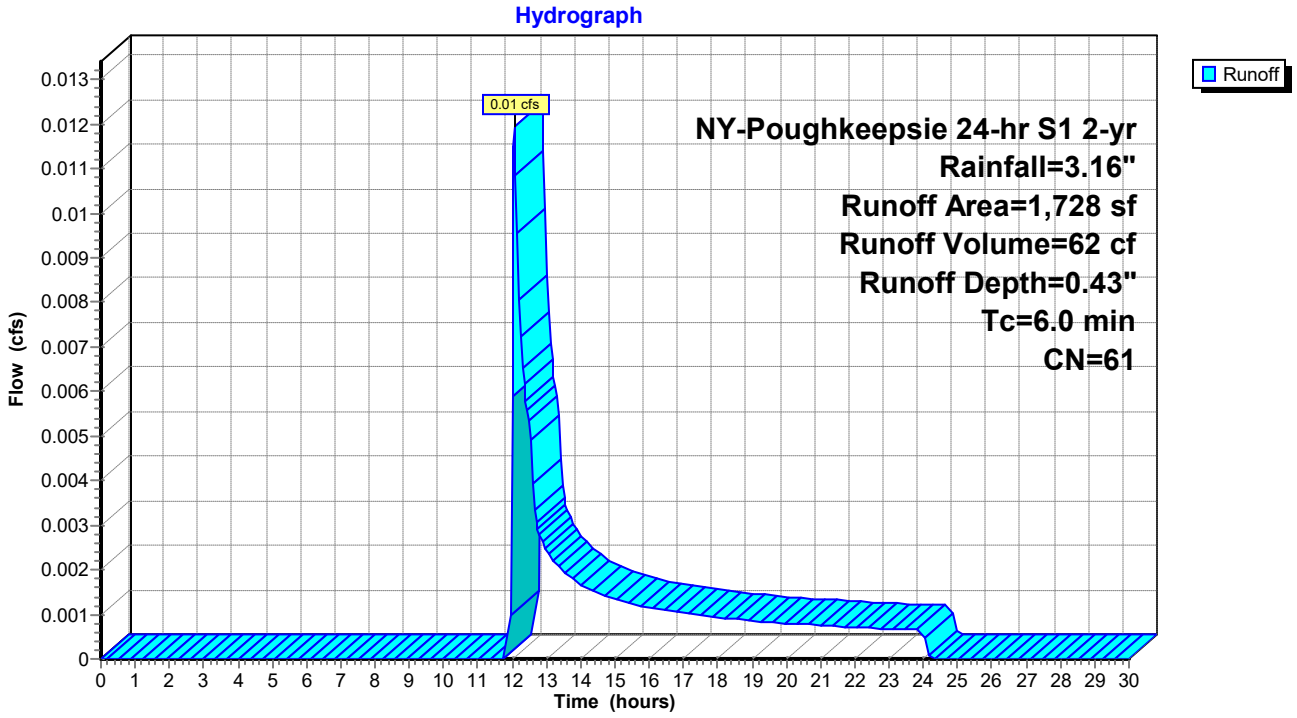

Summary for Reach DP-1: DP-1

[40] Hint: Not Described (Outflow=Inflow)

Inflow Area = 19,359 sf, 36.70% Impervious, Inflow Depth = 0.44" for 2-yr event
Inflow = 0.22 cfs @ 12.05 hrs, Volume= 707 cf
Outflow = 0.22 cfs @ 12.05 hrs, Volume= 707 cf, Atten= 0%, Lag= 0.0 min

Routing by Stor-Ind+Trans method, Time Span= 0.00-30.00 hrs, dt= 0.05 hrs

Reach DP-1: DP-1

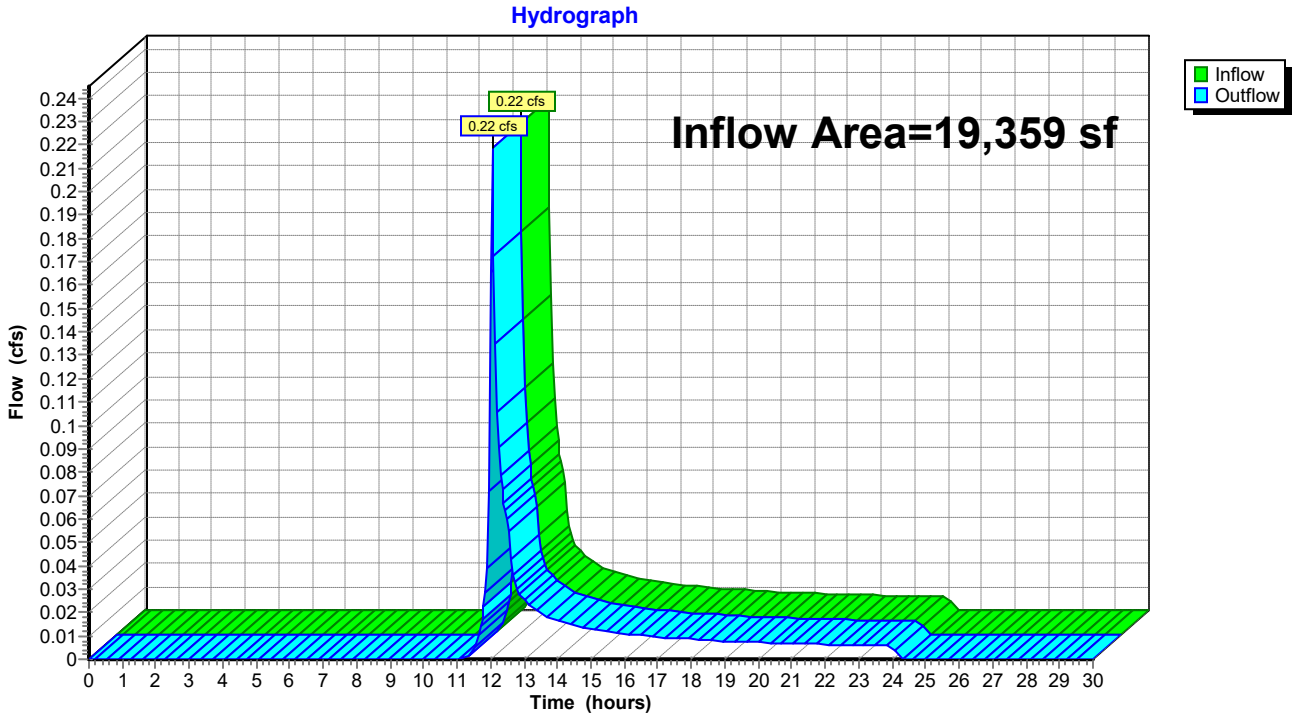

Summary for Reach DP-2: DP-2

[40] Hint: Not Described (Outflow=Inflow)

Inflow Area = 1,728 sf, 0.00% Impervious, Inflow Depth = 0.43" for 2-yr event
Inflow = 0.01 cfs @ 12.07 hrs, Volume= 62 cf
Outflow = 0.01 cfs @ 12.07 hrs, Volume= 62 cf, Atten= 0%, Lag= 0.0 min

Routing by Stor-Ind+Trans method, Time Span= 0.00-30.00 hrs, dt= 0.05 hrs

Reach DP-2: DP-2

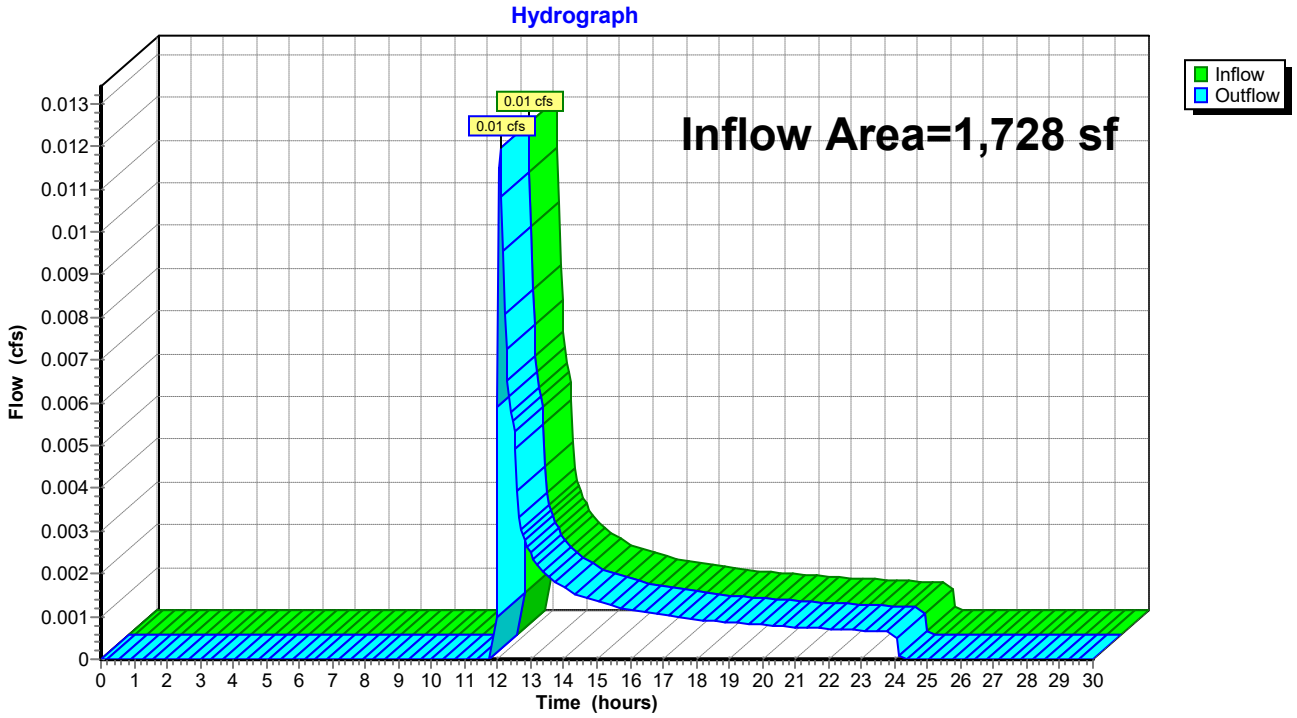

Summary for Reach DP-3: DP-3

[40] Hint: Not Described (Outflow=Inflow)

Inflow Area = 24,139 sf, 93.86% Impervious, Inflow Depth = 0.00" for 2-yr event
Inflow = 0.00 cfs @ 0.00 hrs, Volume= 0 cf
Outflow = 0.00 cfs @ 0.00 hrs, Volume= 0 cf, Atten= 0%, Lag= 0.0 min

Routing by Stor-Ind+Trans method, Time Span= 0.00-30.00 hrs, dt= 0.05 hrs

Reach DP-3: DP-3

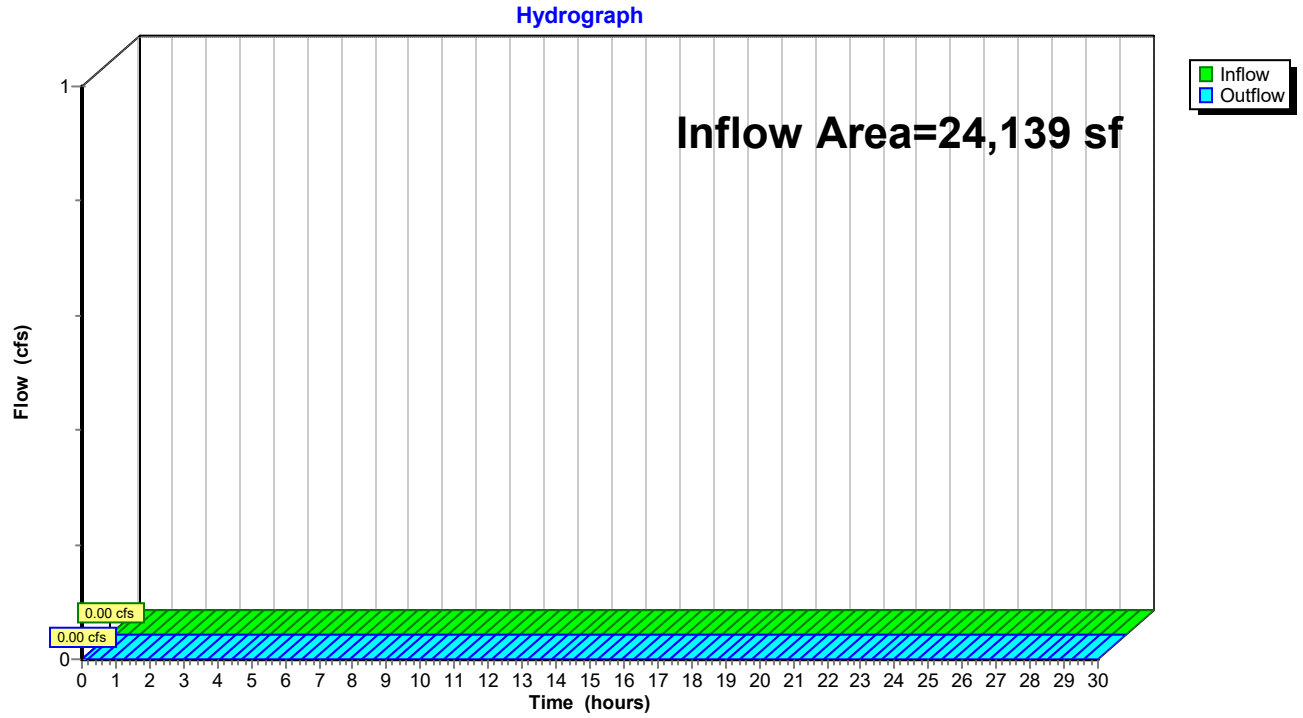

Summary for Pond 4P: Drywell

Inflow Area = 24,139 sf, 93.86% Impervious, Inflow Depth = 2.71" for 2-yr event
Inflow = 1.83 cfs @ 12.04 hrs, Volume= 5,451 cf
Outflow = 0.05 cfs @ 9.90 hrs, Volume= 4,563 cf, Atten= 97%, Lag= 0.0 min
Discarded = 0.05 cfs @ 9.90 hrs, Volume= 4,563 cf
Primary = 0.00 cfs @ 0.00 hrs, Volume= 0 cf
Routed to Reach DP-3 : DP-3

Routing by Stor-Ind method, Time Span= 0.00-30.00 hrs, dt= 0.05 hrs
Peak Elev= 54.55' @ 15.29 hrs Surf.Area= 2,370 sf Storage= 2,764 cf

Plug-Flow detention time= 399.6 min calculated for 4,563 cf (84% of inflow)
Center-of-Mass det. time= 322.4 min (1,101.6 - 779.2)

Volume	Invert	Avail.Storage	Storage Description
#1	52.50'	4,390 cf	**Custom Stage Data (Prismatic)** Listed below (Recalc) 13,414 cf Overall - 2,439 cf Embedded = 10,975 cf x 40.0% Voids
#2	53.41'	2,439 cf	**ADS_StormTech SC-800 +Cap** x 47 Inside #1 Effective Size= 45.0"W x 33.0"H => 7.11 sf x 7.12'L = 50.6 cf Overall Size= 51.0"W x 33.0"H x 7.55'L with 0.43' Overlap 47 Chambers in 9 Rows Cap Storage= 3.4 cf x 2 x 9 rows = 61.6 cf
		6,829 cf	Total Available Storage

Elevation (feet)	Surf.Area (sq-ft)	Inc.Store (cubic-feet)	Cum.Store (cubic-feet)
52.50	2,370	0	0
58.16	2,370	13,414	13,414

Device	Routing	Invert	Outlet Devices
#1	Primary	55.19'	**6.0" Round Culvert** L= 60.0' CMP, projecting, no headwall, Ke= 0.900 Inlet / Outlet Invert= 55.19' / 54.50' S= 0.0115 '/' Cc= 0.900 n= 0.010, Flow Area= 0.20 sf
#2	Discarded	52.50'	**1.000 in/hr Exfiltration over Surface area**

Discarded OutFlow Max=0.05 cfs @ 9.90 hrs HW=52.56' (Free Discharge)
↑—**2=Exfiltration** (Exfiltration Controls 0.05 cfs)

Primary OutFlow Max=0.00 cfs @ 0.00 hrs HW=52.50' (Free Discharge)
↑—**1=Culvert** (Controls 0.00 cfs)

Pond 4P: Drywell

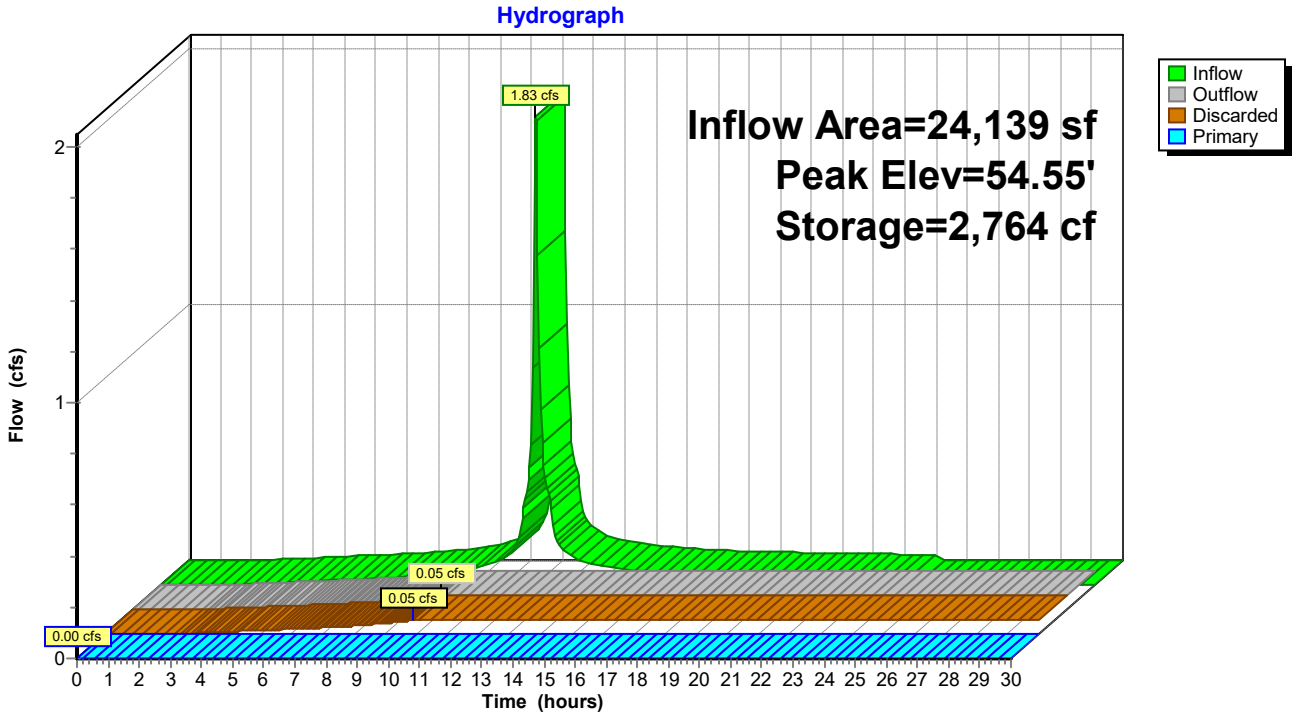

Pond 4P: Drywell

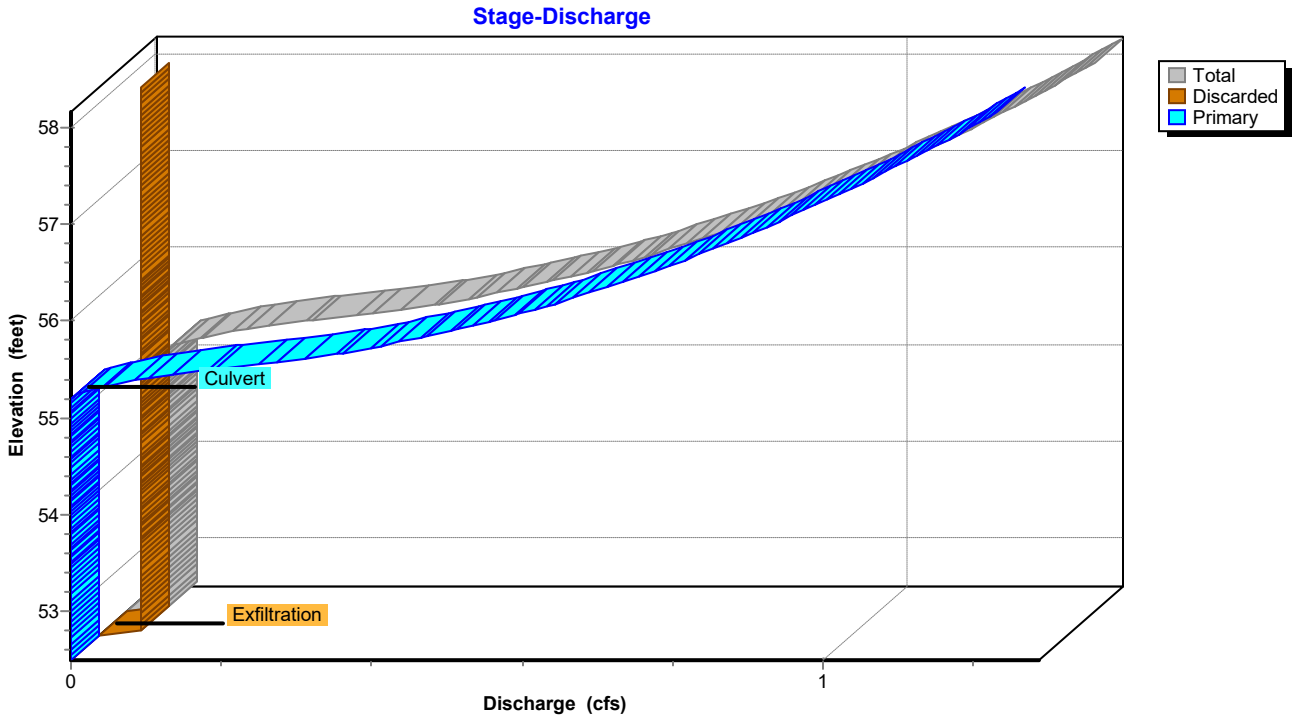

Stage-Area-Storage for Pond 4P: Drywell

Elevation (feet)	Surface (sq-ft)	Storage (cubic-feet)
52.50	**2,370**	0
52.60	2,370	95
52.70	2,370	190
52.80	2,370	284
52.90	2,370	379
53.00	2,370	474
53.10	2,370	569
53.20	2,370	664
53.30	2,370	758
53.40	2,370	853
53.50	2,370	1,017
53.60	2,370	1,188
53.70	2,370	1,358
53.80	2,370	1,528
53.90	2,370	1,696
54.00	2,370	1,863
54.10	2,370	2,029
54.20	2,370	2,194
54.30	2,370	2,357
54.40	2,370	2,519
54.50	2,370	2,680
54.60	2,370	2,839
54.70	2,370	2,996
54.80	2,370	3,151
54.90	2,370	3,304
55.00	2,370	3,455
55.10	2,370	3,604
55.20	2,370	3,750
55.30	2,370	3,894
55.40	2,370	4,034
55.50	2,370	4,171
55.60	2,370	4,304
55.70	2,370	4,432
55.80	2,370	4,554
55.90	2,370	4,669
56.00	2,370	4,775
56.10	2,370	4,875
56.20	2,370	4,971
56.30	2,370	5,066
56.40	2,370	5,161
56.50	2,370	5,256
56.60	2,370	5,350
56.70	2,370	5,445
56.80	2,370	5,540
56.90	2,370	5,635
57.00	2,370	5,730
57.10	2,370	5,824
57.20	2,370	5,919
57.30	2,370	6,014
57.40	2,370	6,109
57.50	2,370	6,204
57.60	2,370	6,298
57.70	2,370	6,393
57.80	2,370	6,488
57.90	2,370	6,583
58.00	2,370	6,678
58.10	2,370	**6,772**

Summary for Pond UGC-1: UGC-1

Inflow Area = 8,824 sf, 80.51% Impervious, Inflow Depth = 2.22" for 2-yr event
Inflow = 0.58 cfs @ 12.04 hrs, Volume= 1,633 cf
Outflow = 0.11 cfs @ 11.90 hrs, Volume= 1,633 cf, Atten= 82%, Lag= 0.0 min
Discarded = 0.11 cfs @ 11.90 hrs, Volume= 1,633 cf
Primary = 0.00 cfs @ 0.00 hrs, Volume= 0 cf
Routed to Reach DP-1 : DP-1

Routing by Stor-Ind method, Time Span= 0.00-30.00 hrs, dt= 0.05 hrs
Peak Elev= 40.65' @ 12.51 hrs Surf.Area= 608 sf Storage= 393 cf

Plug-Flow detention time= 24.5 min calculated for 1,630 cf (100% of inflow)
Center-of-Mass det. time= 24.4 min (837.7 - 813.3)

Volume	Invert	Avail.Storage	Storage Description
#1	40.00'	5,472 cf	**Custom Stage Data (Prismatic)** Listed below (Recalc)

Elevation (feet)	Surf.Area (sq-ft)	Inc.Store (cubic-feet)	Cum.Store (cubic-feet)
40.00	608	0	0
49.00	608	5,472	5,472

Device	Routing	Invert	Outlet Devices
#1	Discarded	40.00'	**7.500 in/hr Exfiltration over Surface area**
#2	Primary	41.00'	**12.0" Round Culvert** L= 10.0' CMP, projecting, no headwall, Ke= 0.900 Inlet / Outlet Invert= 41.00' / 40.90' S= 0.0100 '/' Cc= 0.900 n= 0.010, Flow Area= 0.79 sf

Discarded OutFlow Max=0.11 cfs @ 11.90 hrs HW=40.10' (Free Discharge)
↑—**1=Exfiltration** (Exfiltration Controls 0.11 cfs)

Primary OutFlow Max=0.00 cfs @ 0.00 hrs HW=40.00' (Free Discharge)
↑—**2=Culvert** (Controls 0.00 cfs)

Pond UGC-1: UGC-1

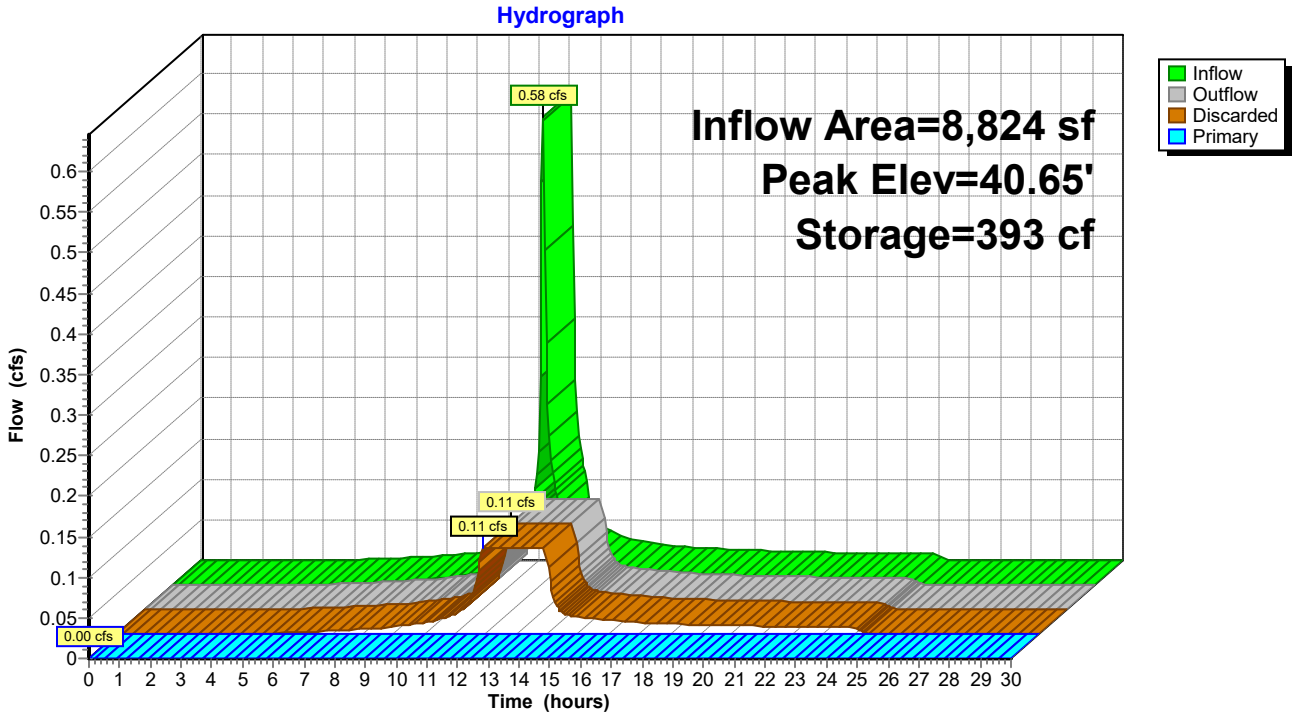

Pond UGC-1: UGC-1

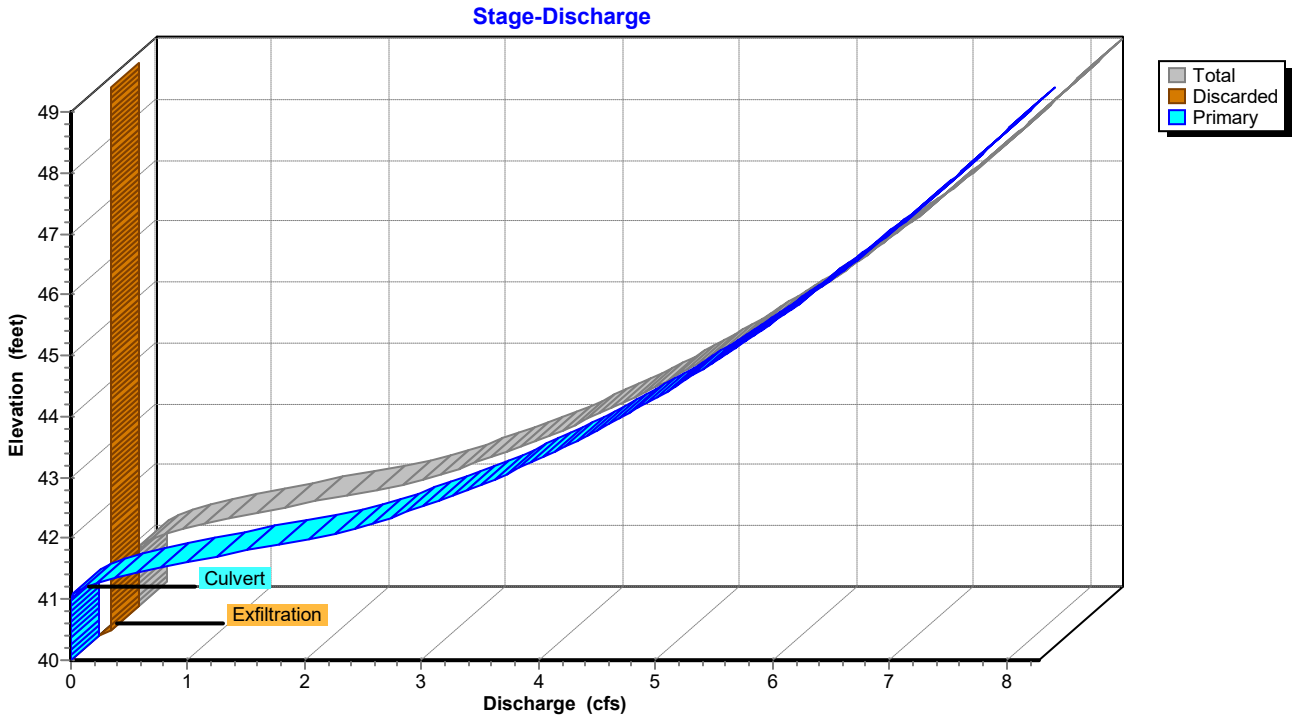

Stage-Area-Storage for Pond UGC-1: UGC-1

Elevation (feet)	Surface (sq-ft)	Storage (cubic-feet)
40.00	**608**	0
40.10	608	61
40.20	608	122
40.30	608	182
40.40	608	243
40.50	608	304
40.60	608	365
40.70	608	426
40.80	608	486
40.90	608	547
41.00	608	608
41.10	608	669
41.20	608	730
41.30	608	790
41.40	608	851
41.50	608	912
41.60	608	973
41.70	608	1,034
41.80	608	1,094
41.90	608	1,155
42.00	608	1,216
42.10	608	1,277
42.20	608	1,338
42.30	608	1,398
42.40	608	1,459
42.50	608	1,520
42.60	608	1,581
42.70	608	1,642
42.80	608	1,702
42.90	608	1,763
43.00	608	1,824
43.10	608	1,885
43.20	608	1,946
43.30	608	2,006
43.40	608	2,067
43.50	608	2,128
43.60	608	2,189
43.70	608	2,250
43.80	608	2,310
43.90	608	2,371
44.00	608	2,432
44.10	608	2,493
44.20	608	2,554
44.30	608	2,614
44.40	608	2,675
44.50	608	2,736
44.60	608	2,797
44.70	608	2,858
44.80	608	2,918
44.90	608	2,979
45.00	608	3,040
45.10	608	3,101
45.20	608	3,162
45.30	608	3,222
45.40	608	3,283
45.50	608	3,344
45.60	608	3,405
45.70	608	3,466
45.80	608	3,526
45.90	608	3,587
46.00	608	3,648
46.10	608	3,709
46.20	608	3,770
46.30	608	3,830
46.40	608	3,891
46.50	608	3,952
46.60	608	4,013
46.70	608	4,074
46.80	608	4,134
46.90	608	4,195
47.00	608	4,256
47.10	608	4,317
47.20	608	4,378
47.30	608	4,438
47.40	608	4,499
47.50	608	4,560
47.60	608	4,621
47.70	608	4,682
47.80	608	4,742
47.90	608	4,803
48.00	608	4,864
48.10	608	4,925
48.20	608	4,986
48.30	608	5,046
48.40	608	5,107
48.50	608	5,168
48.60	608	5,229
48.70	608	5,290
48.80	608	5,350
48.90	608	5,411
49.00	608	**5,472**

Time span=0.00-30.00 hrs, dt=0.05 hrs, 601 points
Runoff by SCS TR-20 method, UH=SCS, Weighted-CN
Reach routing by Stor-Ind+Trans method - Pond routing by Stor-Ind method

Subcatchment 1: DA-1 Runoff Area=24,139 sf 93.86% Impervious Runoff Depth=4.21"
Flow Length=346' Tc=6.0 min CN=96 Runoff=2.60 cfs 8,478 cf

Subcatchment 2: DA-2 Runoff Area=8,824 sf 80.51% Impervious Runoff Depth=3.67"
Flow Length=91' Tc=6.0 min CN=91 Runoff=0.87 cfs 2,700 cf

Subcatchment 3: DA-3 Runoff Area=10,535 sf 0.00% Impervious Runoff Depth=1.80"
Tc=6.0 min CN=70 Runoff=0.51 cfs 1,582 cf

Subcatchment 4: DA-4 Runoff Area=1,728 sf 0.00% Impervious Runoff Depth=1.18"
Tc=6.0 min CN=61 Runoff=0.05 cfs 170 cf

Reach DP-1: DP-1 Inflow=0.51 cfs 1,755 cf
Outflow=0.51 cfs 1,755 cf

Reach DP-2: DP-2 Inflow=0.05 cfs 170 cf
Outflow=0.05 cfs 170 cf

Reach DP-3: DP-3 Inflow=0.15 cfs 1,195 cf
Outflow=0.15 cfs 1,195 cf

Pond 4P: Drywell Peak Elev=55.46' Storage=4,117 cf Inflow=2.60 cfs 8,478 cf
Discarded=0.05 cfs 4,961 cf Primary=0.15 cfs 1,195 cf Outflow=0.21 cfs 6,156 cf

Pond UGC-1: UGC-1 Peak Elev=41.17' Storage=714 cf Inflow=0.87 cfs 2,700 cf
Discarded=0.11 cfs 2,527 cf Primary=0.10 cfs 173 cf Outflow=0.21 cfs 2,700 cf

Total Runoff Area = 45,226 sf Runoff Volume = 12,931 cf Average Runoff Depth = 3.43"
34.19% Pervious = 15,465 sf 65.81% Impervious = 29,761 sf

Summary for Subcatchment 1: DA-1

Runoff = 2.60 cfs @ 12.04 hrs, Volume= 8,478 cf, Depth= 4.21"
Routed to Pond 4P : Drywell

Runoff by SCS TR-20 method, UH=SCS, Weighted-CN, Time Span= 0.00-30.00 hrs, dt= 0.05 hrs
NY-Poughkeepsie 24-hr S1 10-yr Rainfall=4.68"

Area (sf)	CN	Description
1,482	61	>75% Grass cover, Good, HSG B
16,877	98	Roofs, HSG B
5,780	98	Paved parking, HSG B
24,139	96	Weighted Average
1,482		6.14% Pervious Area
22,657		93.86% Impervious Area

Tc (min)	Length (feet)	Slope (ft/ft)	Velocity (ft/sec)	Capacity (cfs)	Description
2.2	100	0.0179	0.75		**Sheet Flow, A-B** n= 0.022 P2= 3.16"
0.6	93	0.0290	2.74		**Shallow Concentrated Flow, B-C** Unpaved Kv= 16.1 fps
0.7	153	0.2550	3.53		**Shallow Concentrated Flow, C-D** Short Grass Pasture Kv= 7.0 fps
3.5	346	Total, Increased to minimum Tc = 6.0 min			

Subcatchment 1: DA-1

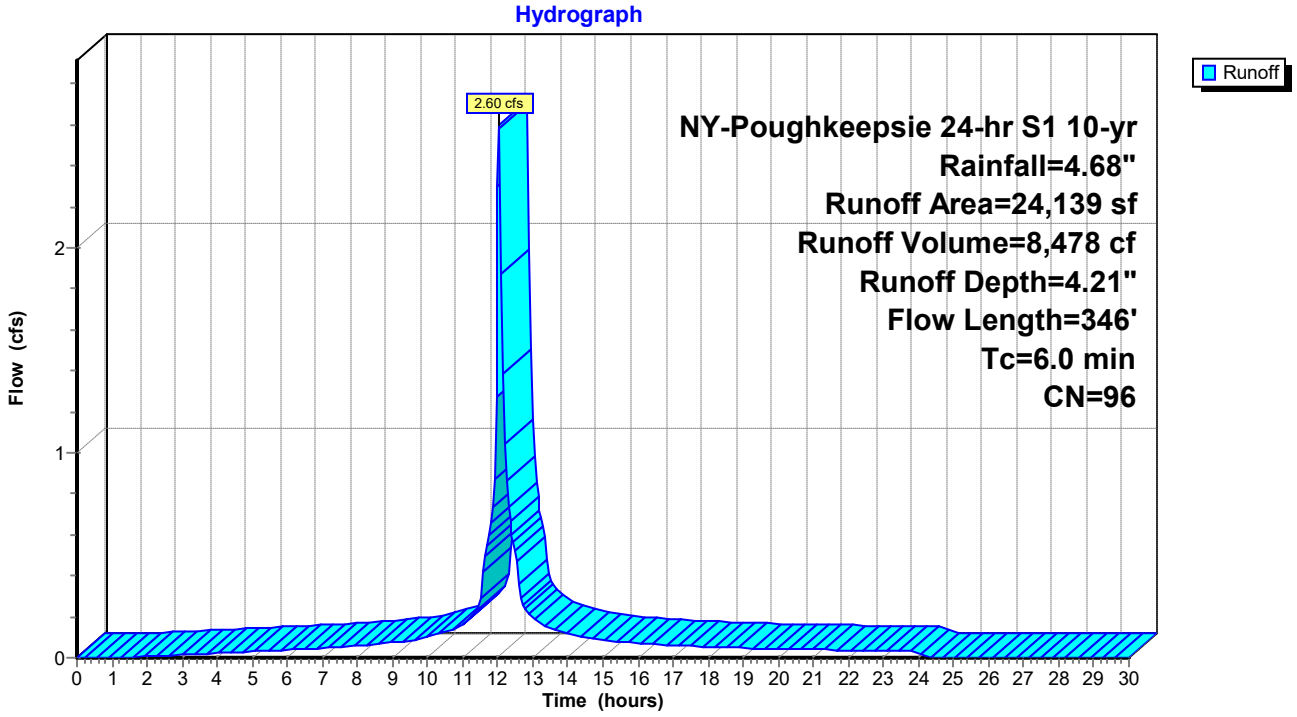

Summary for Subcatchment 2: DA-2

Runoff = 0.87 cfs @ 12.04 hrs, Volume= 2,700 cf, Depth= 3.67"
Routed to Pond UGC-1 : UGC-1

Runoff by SCS TR-20 method, UH=SCS, Weighted-CN, Time Span= 0.00-30.00 hrs, dt= 0.05 hrs
NY-Poughkeepsie 24-hr S1 10-yr Rainfall=4.68"

Area (sf)	CN	Description
1,720	61	>75% Grass cover, Good, HSG B
7,104	98	Paved parking, HSG B
8,824	91	Weighted Average
1,720		19.49% Pervious Area
7,104		80.51% Impervious Area

Tc (min)	Length (feet)	Slope (ft/ft)	Velocity (ft/sec)	Capacity (cfs)	Description
1.5	81	0.0310	0.90		**Sheet Flow, A-B** n= 0.022 P2= 3.16"
0.1	10	0.5000	3.13		**Sheet Flow, B-C** Smooth surfaces n= 0.011 P2= 3.16"
1.6	91	Total, Increased to minimum Tc = 6.0 min			

Subcatchment 2: DA-2

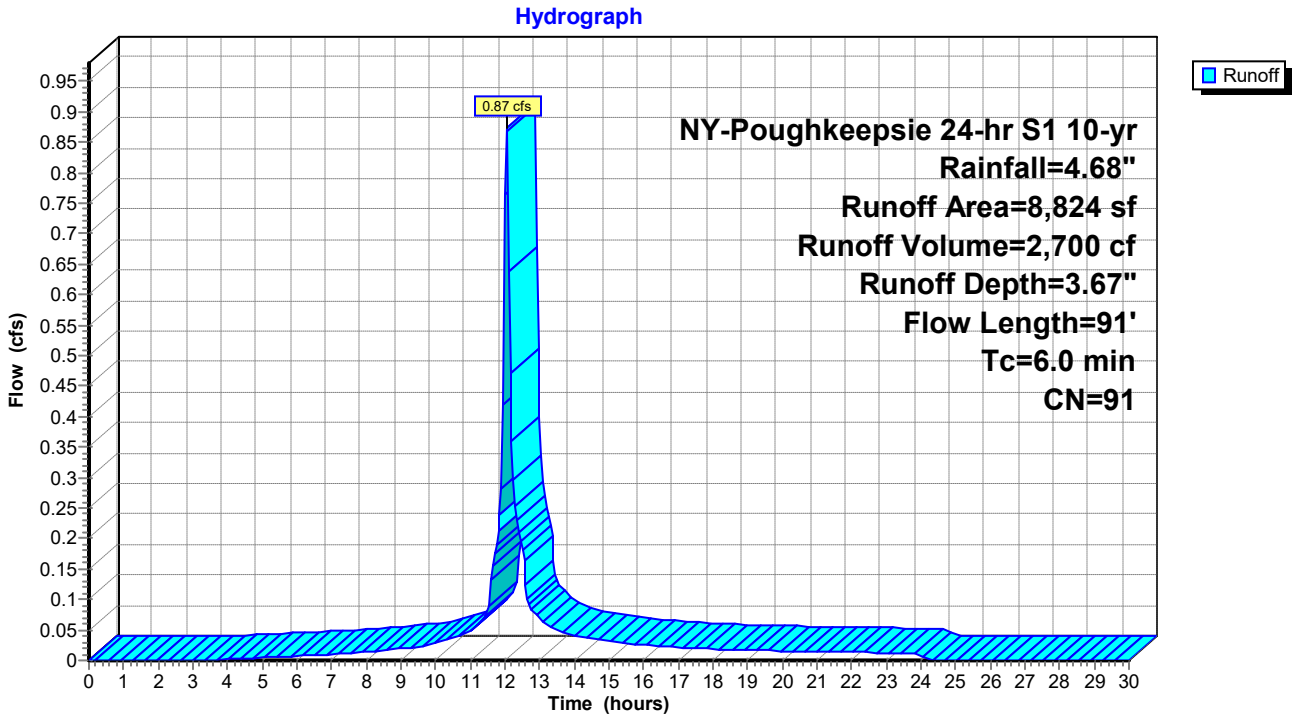

Summary for Subcatchment 3: DA-3

Runoff = 0.51 cfs @ 12.05 hrs, Volume= 1,582 cf, Depth= 1.80"
Routed to Reach DP-1 : DP-1

Runoff by SCS TR-20 method, UH=SCS, Weighted-CN, Time Span= 0.00-30.00 hrs, dt= 0.05 hrs
NY-Poughkeepsie 24-hr S1 10-yr Rainfall=4.68"

	Area (sf)	CN	Description
	9,618	69	50-75% Grass cover, Fair, HSG B
*	917	80	Pervious Pavers
	10,535	70	Weighted Average
	10,535		100.00% Pervious Area

Tc (min)	Length (feet)	Slope (ft/ft)	Velocity (ft/sec)	Capacity (cfs)	Description
6.0					**Direct Entry, Min. Tc**

Subcatchment 3: DA-3

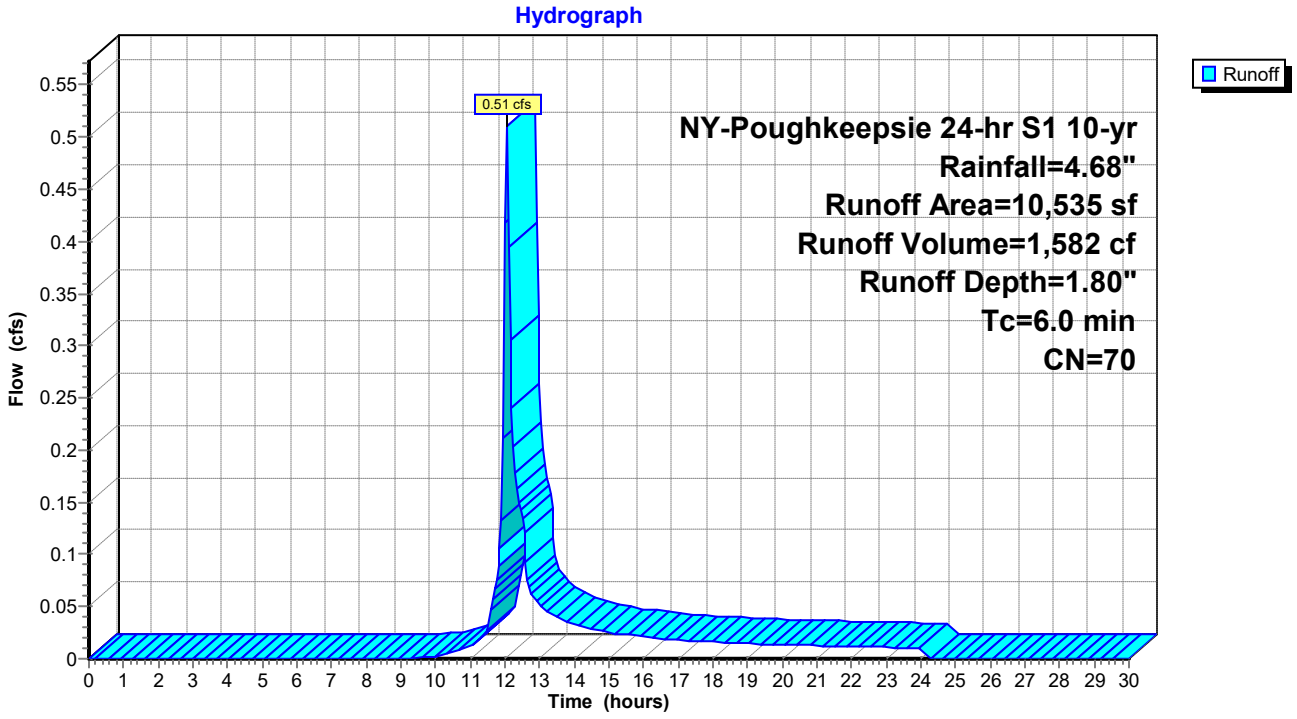

Summary for Subcatchment 4: DA-4

Runoff = 0.05 cfs @ 12.05 hrs, Volume= 170 cf, Depth= 1.18"
Routed to Reach DP-2 : DP-2

Runoff by SCS TR-20 method, UH=SCS, Weighted-CN, Time Span= 0.00-30.00 hrs, dt= 0.05 hrs
NY-Poughkeepsie 24-hr S1 10-yr Rainfall=4.68"

Area (sf)	CN	Description
1,728	61	>75% Grass cover, Good, HSG B
1,728		100.00% Pervious Area

Tc (min)	Length (feet)	Slope (ft/ft)	Velocity (ft/sec)	Capacity (cfs)	Description
6.0					**Direct Entry, Min. Tc**

Subcatchment 4: DA-4

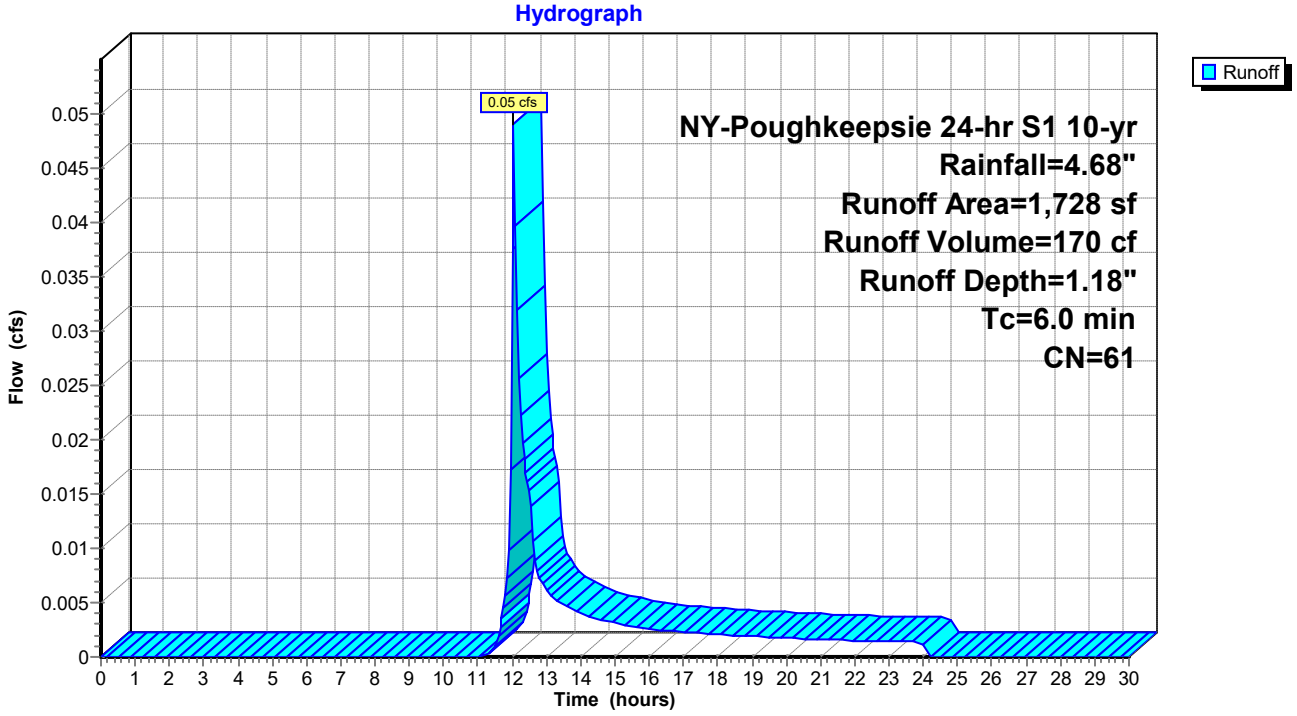

Summary for Reach DP-1: DP-1

[40] Hint: Not Described (Outflow=Inflow)

Inflow Area = 19,359 sf, 36.70% Impervious, Inflow Depth = 1.09" for 10-yr event
Inflow = 0.51 cfs @ 12.05 hrs, Volume= 1,755 cf
Outflow = 0.51 cfs @ 12.05 hrs, Volume= 1,755 cf, Atten= 0%, Lag= 0.0 min

Routing by Stor-Ind+Trans method, Time Span= 0.00-30.00 hrs, dt= 0.05 hrs

Reach DP-1: DP-1

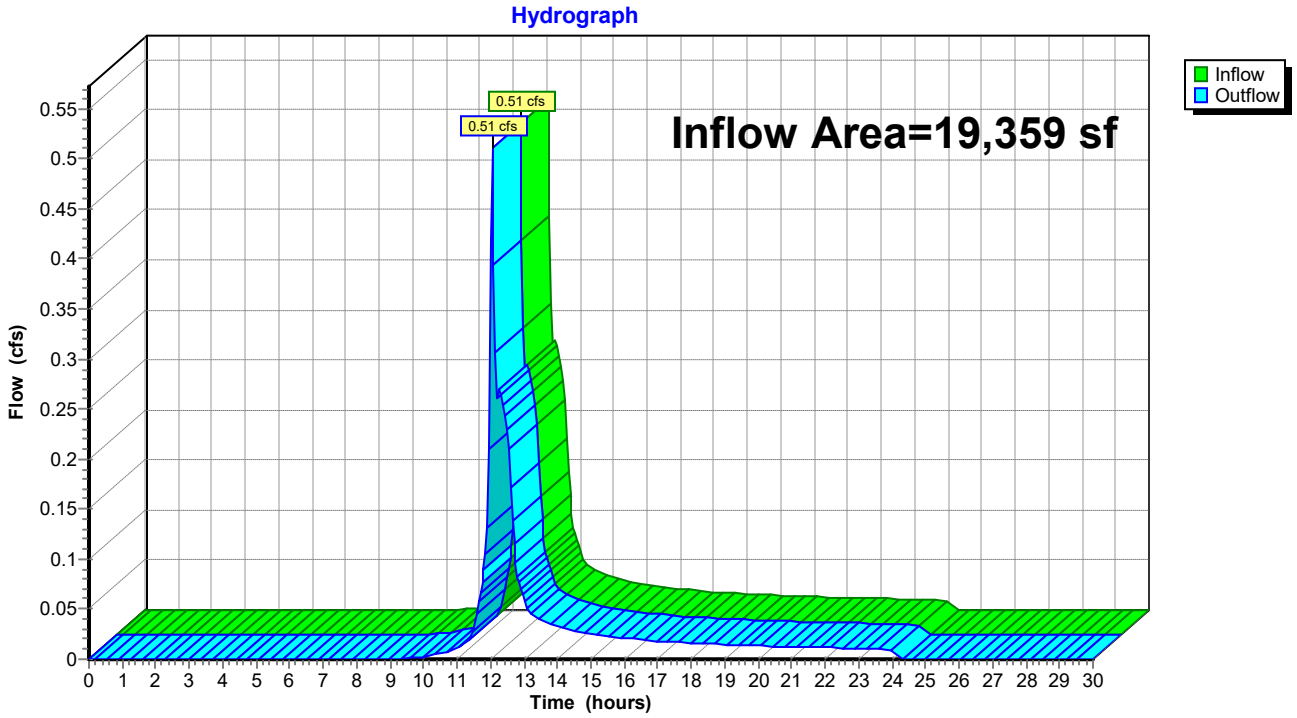

Summary for Reach DP-2: DP-2

[40] Hint: Not Described (Outflow=Inflow)

Inflow Area = 1,728 sf, 0.00% Impervious, Inflow Depth = 1.18" for 10-yr event
Inflow = 0.05 cfs @ 12.05 hrs, Volume= 170 cf
Outflow = 0.05 cfs @ 12.05 hrs, Volume= 170 cf, Atten= 0%, Lag= 0.0 min

Routing by Stor-Ind+Trans method, Time Span= 0.00-30.00 hrs, dt= 0.05 hrs

Reach DP-2: DP-2

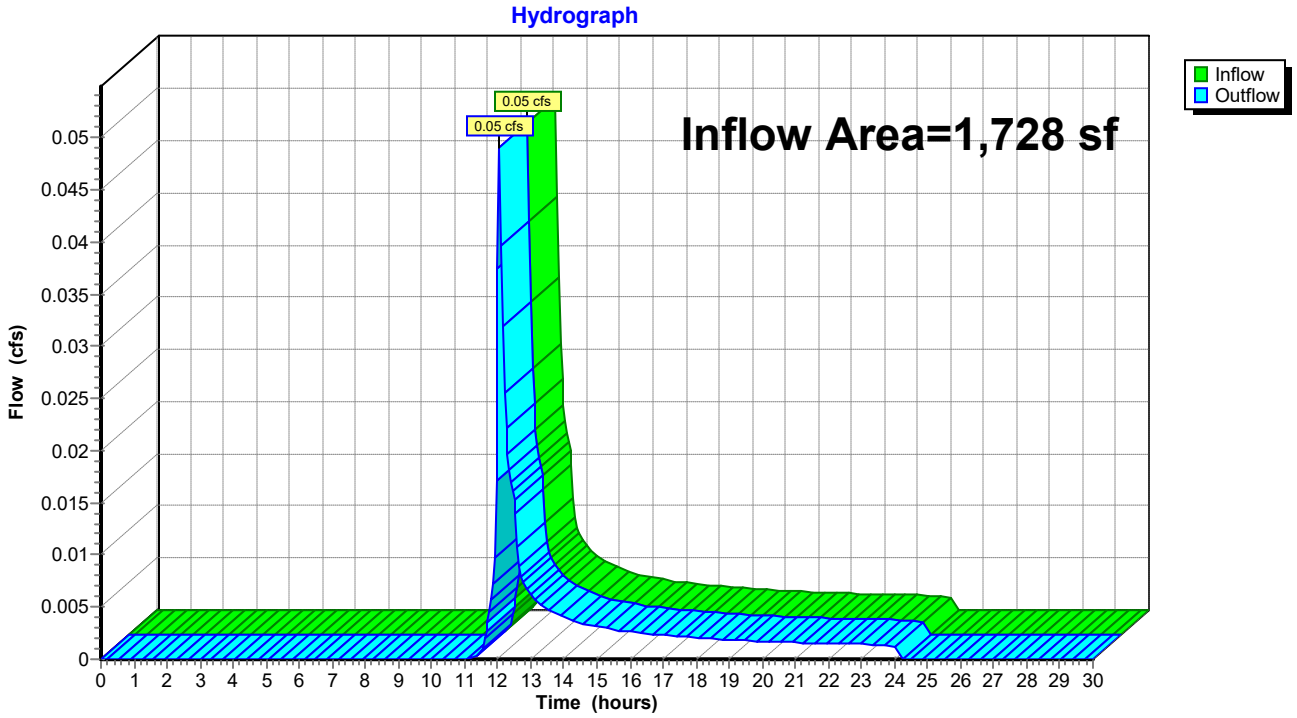

Summary for Reach DP-3: DP-3

[40] Hint: Not Described (Outflow=Inflow)

Inflow Area = 24,139 sf, 93.86% Impervious, Inflow Depth = 0.59" for 10-yr event
Inflow = 0.15 cfs @ 12.92 hrs, Volume= 1,195 cf
Outflow = 0.15 cfs @ 12.92 hrs, Volume= 1,195 cf, Atten= 0%, Lag= 0.0 min

Routing by Stor-Ind+Trans method, Time Span= 0.00-30.00 hrs, dt= 0.05 hrs

Reach DP-3: DP-3

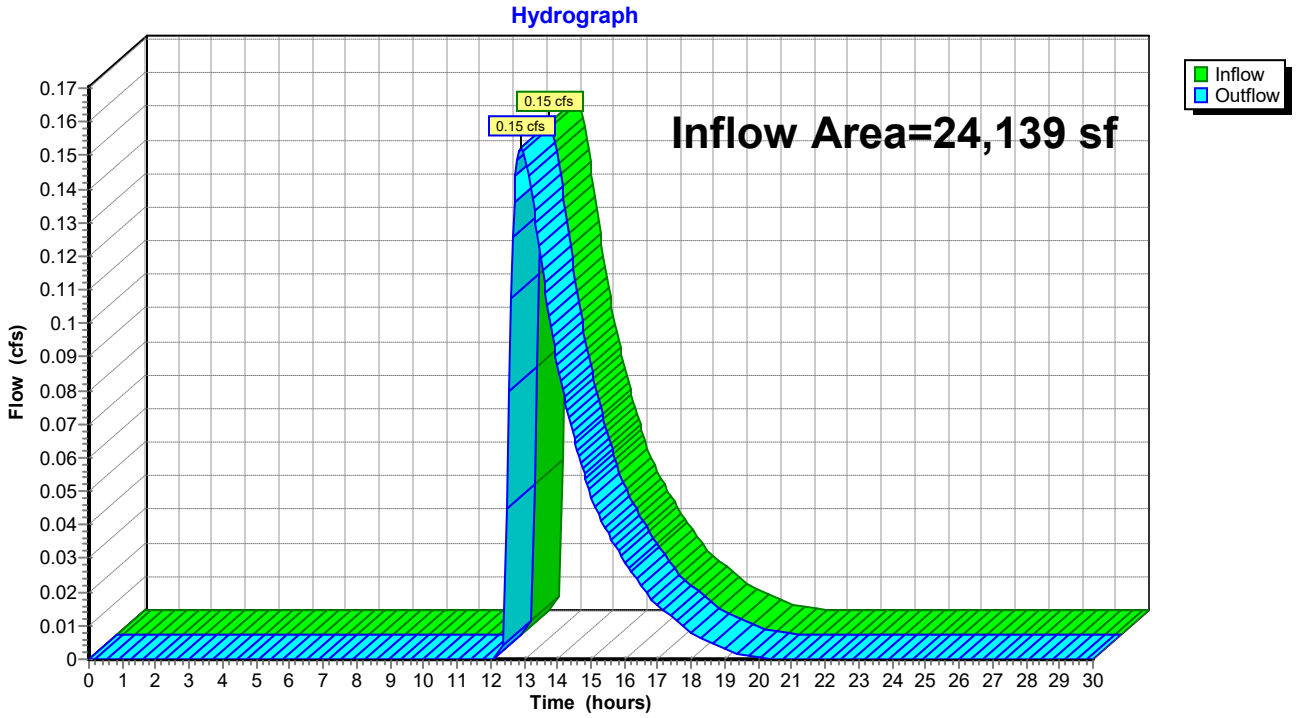

Summary for Pond 4P: Drywell

Inflow Area = 24,139 sf, 93.86% Impervious, Inflow Depth = 4.21" for 10-yr event
Inflow = 2.60 cfs @ 12.04 hrs, Volume= 8,478 cf
Outflow = 0.21 cfs @ 12.92 hrs, Volume= 6,156 cf, Atten= 92%, Lag= 52.8 min
Discarded = 0.05 cfs @ 8.05 hrs, Volume= 4,961 cf
Primary = 0.15 cfs @ 12.92 hrs, Volume= 1,195 cf
Routed to Reach DP-3 : DP-3

Routing by Stor-Ind method, Time Span= 0.00-30.00 hrs, dt= 0.05 hrs
Peak Elev= 55.46' @ 12.92 hrs Surf.Area= 2,370 sf Storage= 4,117 cf

Plug-Flow detention time= 342.9 min calculated for 6,146 cf (72% of inflow)
Center-of-Mass det. time= 239.2 min (1,006.2 - 767.0)

Volume	Invert	Avail.Storage	Storage Description
#1	52.50'	4,390 cf	**Custom Stage Data (Prismatic)** Listed below (Recalc) 13,414 cf Overall - 2,439 cf Embedded = 10,975 cf x 40.0% Voids
#2	53.41'	2,439 cf	**ADS_StormTech SC-800 +Cap** x 47 Inside #1 Effective Size= 45.0"W x 33.0"H => 7.11 sf x 7.12'L = 50.6 cf Overall Size= 51.0"W x 33.0"H x 7.55'L with 0.43' Overlap 47 Chambers in 9 Rows Cap Storage= 3.4 cf x 2 x 9 rows = 61.6 cf
		6,829 cf	Total Available Storage

Elevation (feet)	Surf.Area (sq-ft)	Inc.Store (cubic-feet)	Cum.Store (cubic-feet)
52.50	2,370	0	0
58.16	2,370	13,414	13,414

Device	Routing	Invert	Outlet Devices
#1	Primary	55.19'	**6.0" Round Culvert** L= 60.0' CMP, projecting, no headwall, Ke= 0.900 Inlet / Outlet Invert= 55.19' / 54.50' S= 0.0115 '/' Cc= 0.900 n= 0.010, Flow Area= 0.20 sf
#2	Discarded	52.50'	**1.000 in/hr Exfiltration over Surface area**

Discarded OutFlow Max=0.05 cfs @ 8.05 hrs HW=52.56' (Free Discharge)
↑—**2=Exfiltration** (Exfiltration Controls 0.05 cfs)

Primary OutFlow Max=0.15 cfs @ 12.92 hrs HW=55.46' (Free Discharge)
↑—**1=Culvert** (Inlet Controls 0.15 cfs @ 1.40 fps)

Pond 4P: Drywell

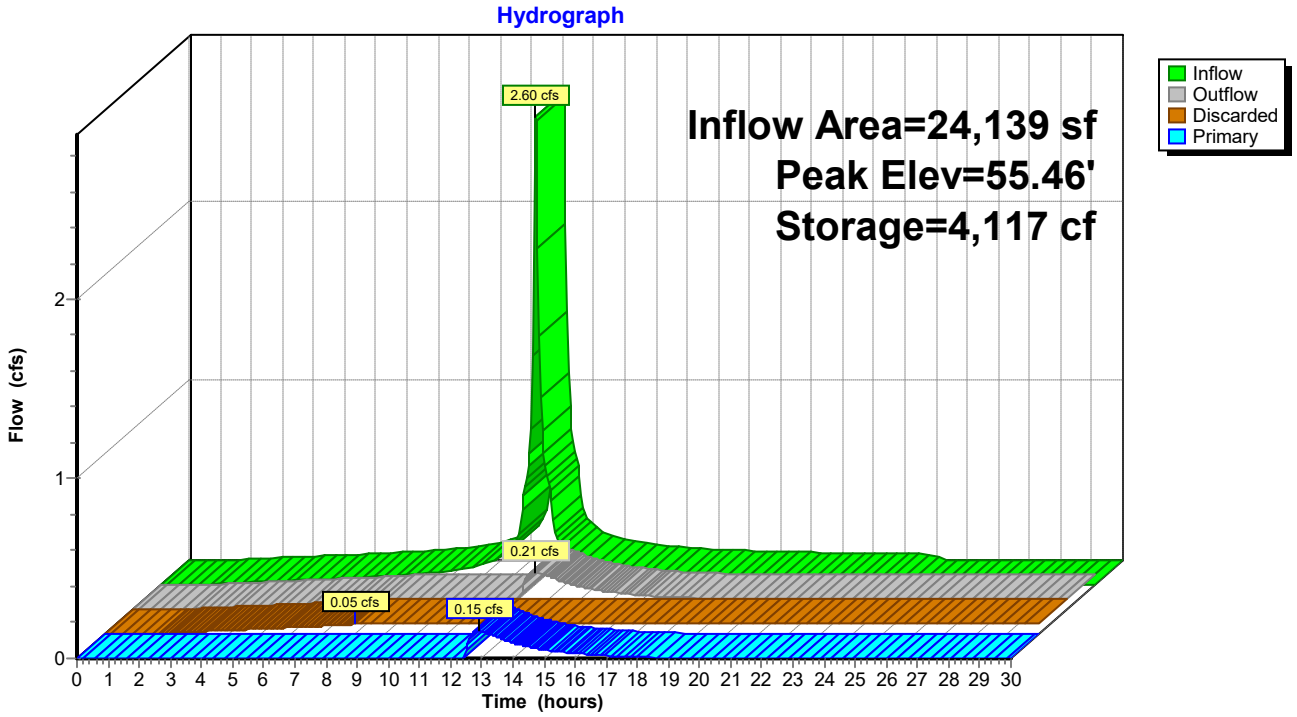

Pond 4P: Drywell

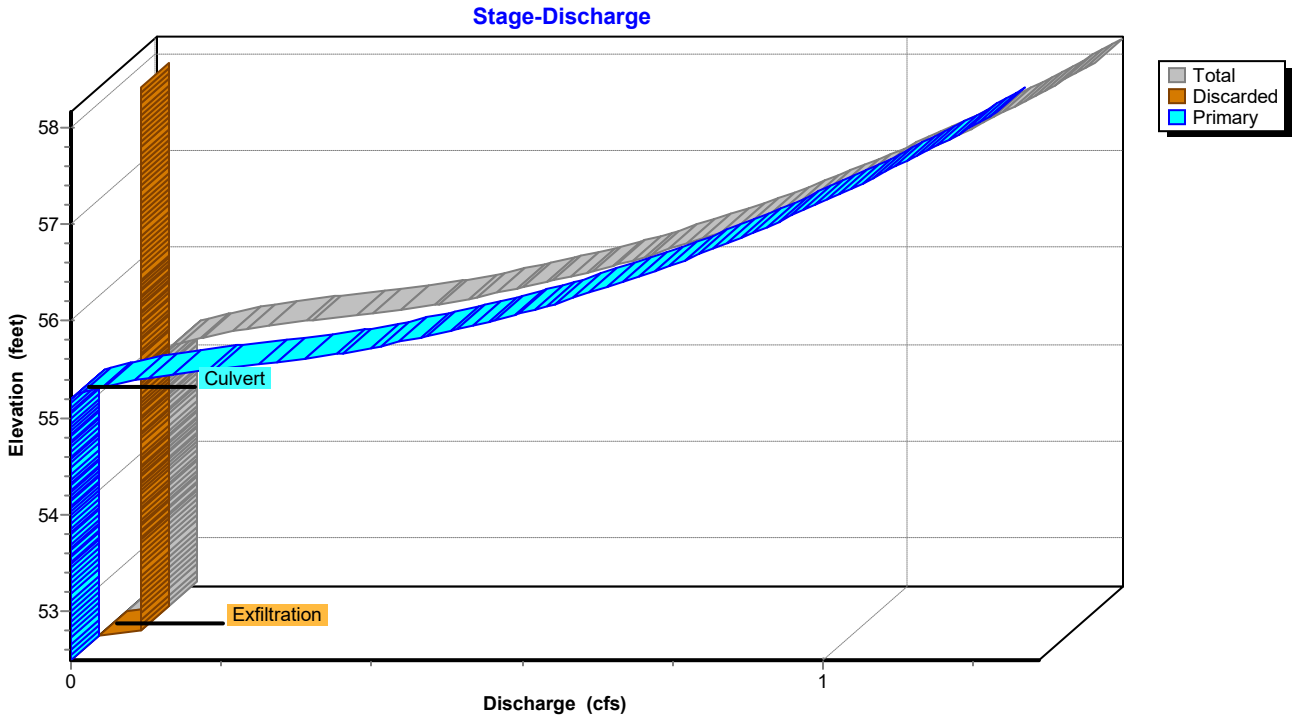

Stage-Area-Storage for Pond 4P: Drywell

Elevation (feet)	Surface (sq-ft)	Storage (cubic-feet)
52.50	**2,370**	0
52.60	2,370	95
52.70	2,370	190
52.80	2,370	284
52.90	2,370	379
53.00	2,370	474
53.10	2,370	569
53.20	2,370	664
53.30	2,370	758
53.40	2,370	853
53.50	2,370	1,017
53.60	2,370	1,188
53.70	2,370	1,358
53.80	2,370	1,528
53.90	2,370	1,696
54.00	2,370	1,863
54.10	2,370	2,029
54.20	2,370	2,194
54.30	2,370	2,357
54.40	2,370	2,519
54.50	2,370	2,680
54.60	2,370	2,839
54.70	2,370	2,996
54.80	2,370	3,151
54.90	2,370	3,304
55.00	2,370	3,455
55.10	2,370	3,604
55.20	2,370	3,750
55.30	2,370	3,894
55.40	2,370	4,034
55.50	2,370	4,171
55.60	2,370	4,304
55.70	2,370	4,432
55.80	2,370	4,554
55.90	2,370	4,669
56.00	2,370	4,775
56.10	2,370	4,875
56.20	2,370	4,971
56.30	2,370	5,066
56.40	2,370	5,161
56.50	2,370	5,256
56.60	2,370	5,350
56.70	2,370	5,445
56.80	2,370	5,540
56.90	2,370	5,635
57.00	2,370	5,730
57.10	2,370	5,824
57.20	2,370	5,919
57.30	2,370	6,014
57.40	2,370	6,109
57.50	2,370	6,204
57.60	2,370	6,298
57.70	2,370	6,393
57.80	2,370	6,488
57.90	2,370	6,583
58.00	2,370	6,678
58.10	2,370	**6,772**

Summary for Pond UGC-1: UGC-1

Inflow Area = 8,824 sf, 80.51% Impervious, Inflow Depth = 3.67" for 10-yr event
Inflow = 0.87 cfs @ 12.04 hrs, Volume= 2,700 cf
Outflow = 0.21 cfs @ 12.41 hrs, Volume= 2,700 cf, Atten= 76%, Lag= 22.0 min
Discarded = 0.11 cfs @ 11.70 hrs, Volume= 2,527 cf
Primary = 0.10 cfs @ 12.41 hrs, Volume= 173 cf
Routed to Reach DP-1 : DP-1

Routing by Stor-Ind method, Time Span= 0.00-30.00 hrs, dt= 0.05 hrs
Peak Elev= 41.17' @ 12.41 hrs Surf.Area= 608 sf Storage= 714 cf

Plug-Flow detention time= 38.5 min calculated for 2,696 cf (100% of inflow)
Center-of-Mass det. time= 38.4 min (835.0 - 796.5)

Volume	Invert	Avail.Storage	Storage Description
#1	40.00'	5,472 cf	**Custom Stage Data (Prismatic)** Listed below (Recalc)

Elevation (feet)	Surf.Area (sq-ft)	Inc.Store (cubic-feet)	Cum.Store (cubic-feet)
40.00	608	0	0
49.00	608	5,472	5,472

Device	Routing	Invert	Outlet Devices
#1	Discarded	40.00'	**7.500 in/hr Exfiltration over Surface area**
#2	Primary	41.00'	**12.0" Round Culvert** L= 10.0' CMP, projecting, no headwall, Ke= 0.900 Inlet / Outlet Invert= 41.00' / 40.90' S= 0.0100 '/' Cc= 0.900 n= 0.010, Flow Area= 0.79 sf

Discarded OutFlow Max=0.11 cfs @ 11.70 hrs HW=40.11' (Free Discharge)
↑—**1=Exfiltration** (Exfiltration Controls 0.11 cfs)

Primary OutFlow Max=0.10 cfs @ 12.41 hrs HW=41.17' (Free Discharge)
↑—**2=Culvert** (Inlet Controls 0.10 cfs @ 1.12 fps)

Pond UGC-1: UGC-1

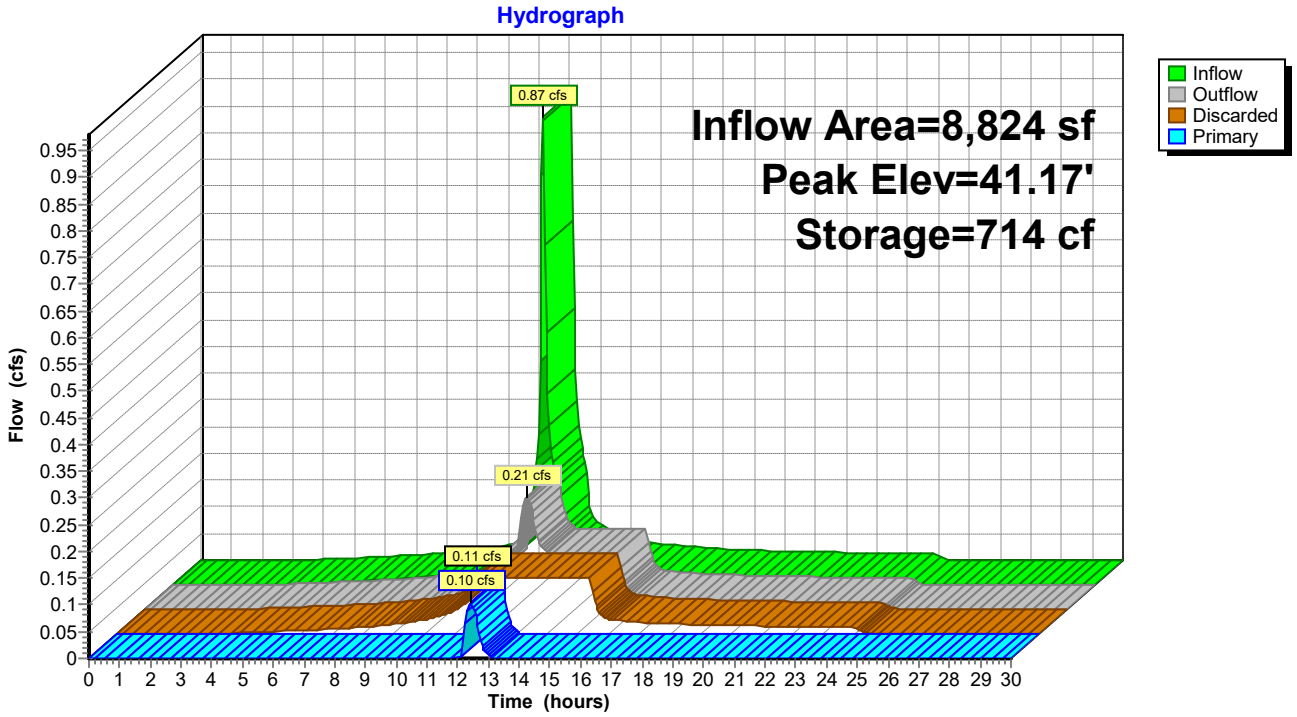

Pond UGC-1: UGC-1

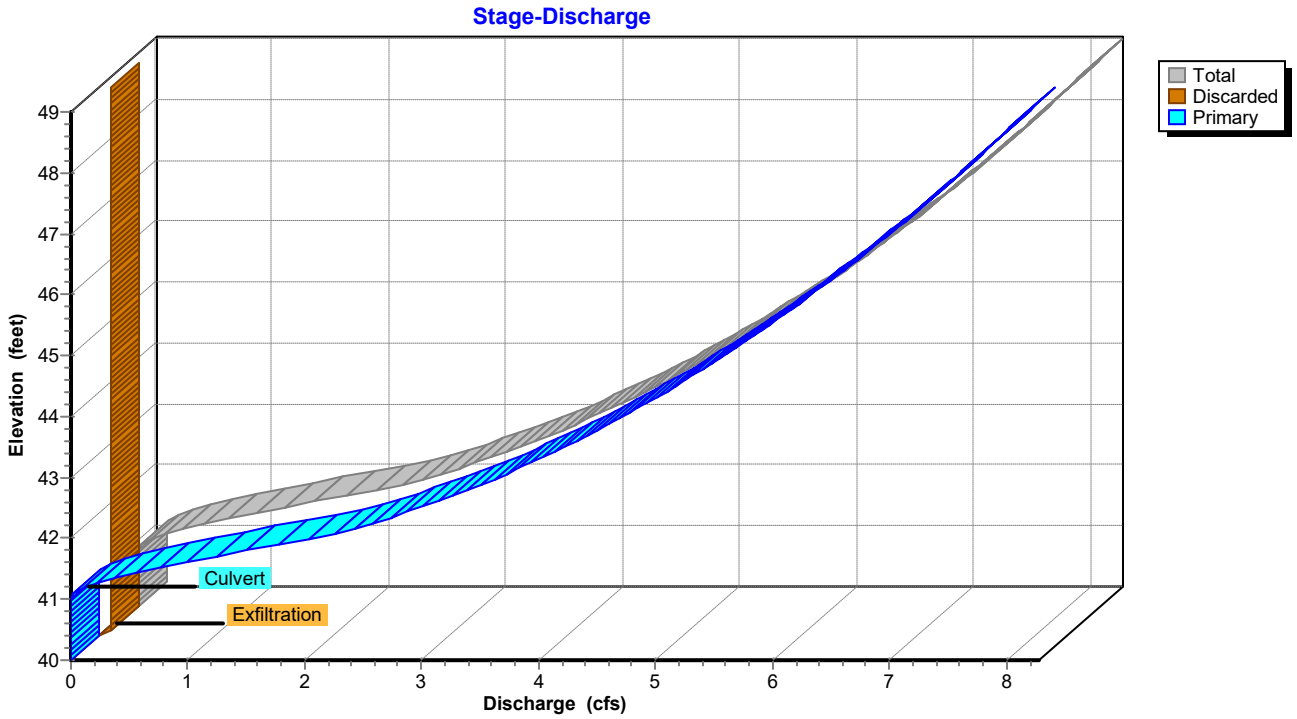

Stage-Area-Storage for Pond UGC-1: UGC-1

Elevation (feet)	Surface (sq-ft)	Storage (cubic-feet)
40.00	**608**	0
40.10	608	61
40.20	608	122
40.30	608	182
40.40	608	243
40.50	608	304
40.60	608	365
40.70	608	426
40.80	608	486
40.90	608	547
41.00	608	608
41.10	608	669
41.20	608	730
41.30	608	790
41.40	608	851
41.50	608	912
41.60	608	973
41.70	608	1,034
41.80	608	1,094
41.90	608	1,155
42.00	608	1,216
42.10	608	1,277
42.20	608	1,338
42.30	608	1,398
42.40	608	1,459
42.50	608	1,520
42.60	608	1,581
42.70	608	1,642
42.80	608	1,702
42.90	608	1,763
43.00	608	1,824
43.10	608	1,885
43.20	608	1,946
43.30	608	2,006
43.40	608	2,067
43.50	608	2,128
43.60	608	2,189
43.70	608	2,250
43.80	608	2,310
43.90	608	2,371
44.00	608	2,432
44.10	608	2,493
44.20	608	2,554
44.30	608	2,614
44.40	608	2,675
44.50	608	2,736
44.60	608	2,797
44.70	608	2,858
44.80	608	2,918
44.90	608	2,979
45.00	608	3,040
45.10	608	3,101
45.20	608	3,162
45.30	608	3,222
45.40	608	3,283
45.50	608	3,344
45.60	608	3,405
45.70	608	3,466
45.80	608	3,526
45.90	608	3,587
46.00	608	3,648
46.10	608	3,709
46.20	608	3,770
46.30	608	3,830
46.40	608	3,891
46.50	608	3,952
46.60	608	4,013
46.70	608	4,074
46.80	608	4,134
46.90	608	4,195
47.00	608	4,256
47.10	608	4,317
47.20	608	4,378
47.30	608	4,438
47.40	608	4,499
47.50	608	4,560
47.60	608	4,621
47.70	608	4,682
47.80	608	4,742
47.90	608	4,803
48.00	608	4,864
48.10	608	4,925
48.20	608	4,986
48.30	608	5,046
48.40	608	5,107
48.50	608	5,168
48.60	608	5,229
48.70	608	5,290
48.80	608	5,350
48.90	608	5,411
49.00	608	**5,472**

Time span=0.00-30.00 hrs, dt=0.05 hrs, 601 points
Runoff by SCS TR-20 method, UH=SCS, Weighted-CN
Reach routing by Stor-Ind+Trans method - Pond routing by Stor-Ind method

Subcatchment 1: DA-1 Runoff Area=24,139 sf 93.86% Impervious Runoff Depth=7.74"
Flow Length=346' Tc=6.0 min CN=96 Runoff=4.35 cfs 15,570 cf

Subcatchment 2: DA-2 Runoff Area=8,824 sf 80.51% Impervious Runoff Depth=7.14"
Flow Length=91' Tc=6.0 min CN=91 Runoff=1.54 cfs 5,252 cf

Subcatchment 3: DA-3 Runoff Area=10,535 sf 0.00% Impervious Runoff Depth=4.65"
Tc=6.0 min CN=70 Runoff=1.28 cfs 4,086 cf

Subcatchment 4: DA-4 Runoff Area=1,728 sf 0.00% Impervious Runoff Depth=3.61"
Tc=6.0 min CN=61 Runoff=0.16 cfs 520 cf

Reach DP-1: DP-1 Inflow=1.95 cfs 5,464 cf
Outflow=1.95 cfs 5,464 cf

Reach DP-2: DP-2 Inflow=0.16 cfs 520 cf
Outflow=0.16 cfs 520 cf

Reach DP-3: DP-3 Inflow=1.12 cfs 7,481 cf
Outflow=1.12 cfs 7,481 cf

Pond 4P: Drywell Peak Elev=57.69' Storage=6,385 cf Inflow=4.35 cfs 15,570 cf
Discarded=0.05 cfs 5,450 cf Primary=1.12 cfs 7,481 cf Outflow=1.17 cfs 12,931 cf

Pond UGC-1: UGC-1 Peak Elev=41.61' Storage=979 cf Inflow=1.54 cfs 5,252 cf
Discarded=0.11 cfs 3,874 cf Primary=0.98 cfs 1,378 cf Outflow=1.08 cfs 5,252 cf

Total Runoff Area = 45,226 sf Runoff Volume = 25,428 cf Average Runoff Depth = 6.75"
34.19% Pervious = 15,465 sf 65.81% Impervious = 29,761 sf

Summary for Subcatchment 1: DA-1

Runoff = 4.35 cfs @ 12.04 hrs, Volume= 15,570 cf, Depth= 7.74"
Routed to Pond 4P : Drywell

Runoff by SCS TR-20 method, UH=SCS, Weighted-CN, Time Span= 0.00-30.00 hrs, dt= 0.05 hrs
NY-Poughkeepsie 24-hr S1 100-yr Rainfall=8.22"

Area (sf)	CN	Description
1,482	61	>75% Grass cover, Good, HSG B
16,877	98	Roofs, HSG B
5,780	98	Paved parking, HSG B
24,139	96	Weighted Average
1,482		6.14% Pervious Area
22,657		93.86% Impervious Area

Tc (min)	Length (feet)	Slope (ft/ft)	Velocity (ft/sec)	Capacity (cfs)	Description
2.2	100	0.0179	0.75		**Sheet Flow, A-B** n= 0.022 P2= 3.16"
0.6	93	0.0290	2.74		**Shallow Concentrated Flow, B-C** Unpaved Kv= 16.1 fps
0.7	153	0.2550	3.53		**Shallow Concentrated Flow, C-D** Short Grass Pasture Kv= 7.0 fps
3.5	346	Total, Increased to minimum Tc = 6.0 min			

Subcatchment 1: DA-1

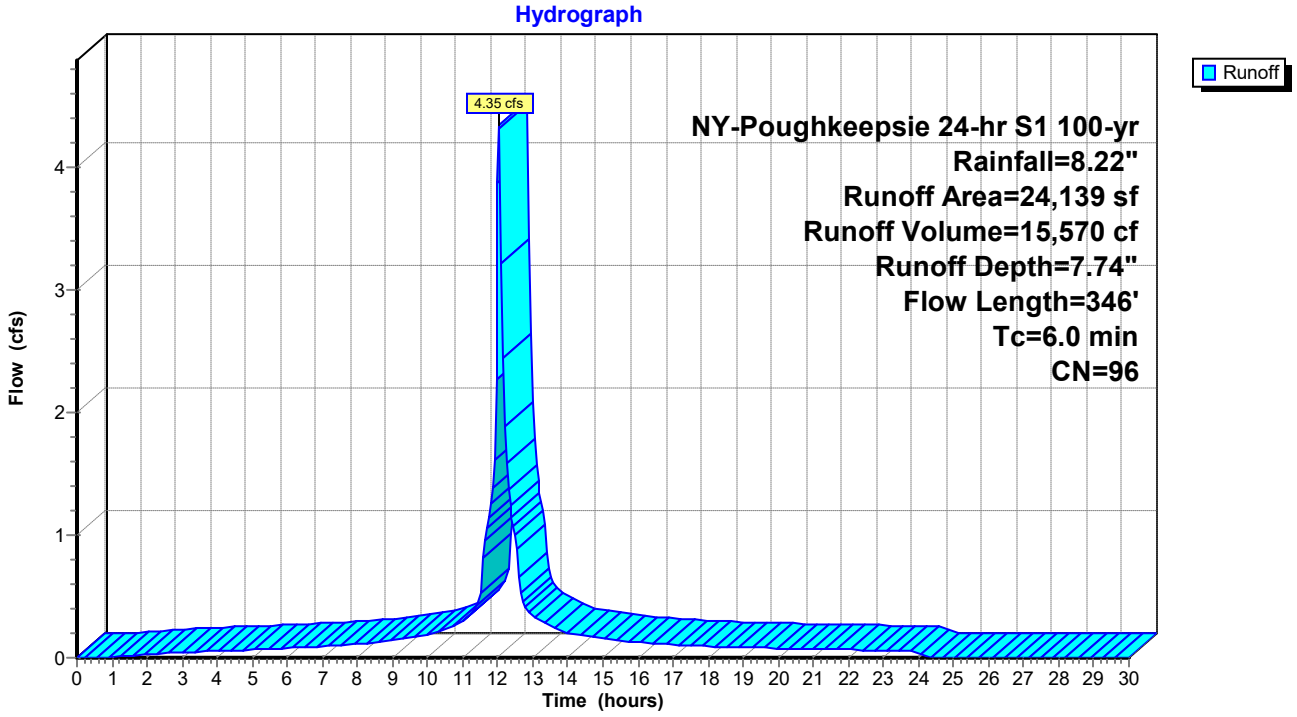

Summary for Subcatchment 2: DA-2

Runoff = 1.54 cfs @ 12.04 hrs, Volume= 5,252 cf, Depth= 7.14"
Routed to Pond UGC-1 : UGC-1

Runoff by SCS TR-20 method, UH=SCS, Weighted-CN, Time Span= 0.00-30.00 hrs, dt= 0.05 hrs
NY-Poughkeepsie 24-hr S1 100-yr Rainfall=8.22"

Area (sf)	CN	Description
1,720	61	>75% Grass cover, Good, HSG B
7,104	98	Paved parking, HSG B
8,824	91	Weighted Average
1,720		19.49% Pervious Area
7,104		80.51% Impervious Area

Tc (min)	Length (feet)	Slope (ft/ft)	Velocity (ft/sec)	Capacity (cfs)	Description
1.5	81	0.0310	0.90		**Sheet Flow, A-B** n= 0.022 P2= 3.16"
0.1	10	0.5000	3.13		**Sheet Flow, B-C** Smooth surfaces n= 0.011 P2= 3.16"
1.6	91	Total, Increased to minimum Tc = 6.0 min			

Subcatchment 2: DA-2

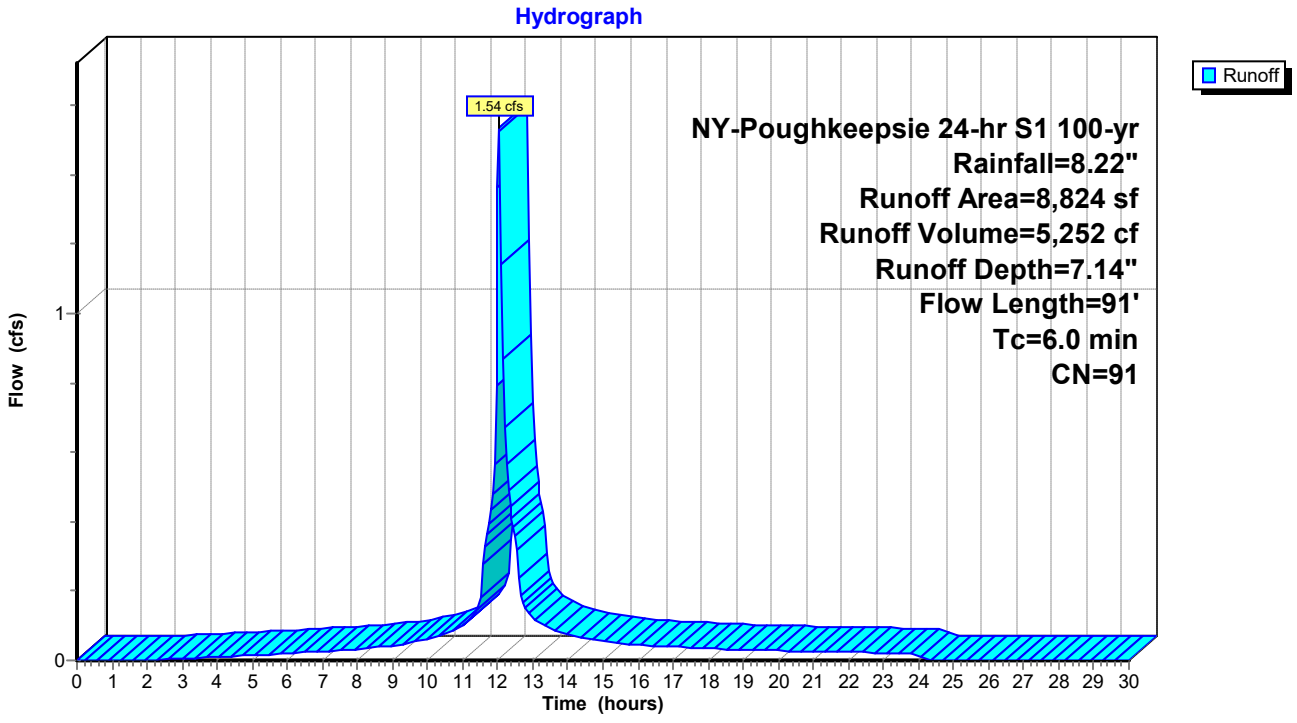

Summary for Subcatchment 3: DA-3

Runoff = 1.28 cfs @ 12.04 hrs, Volume= 4,086 cf, Depth= 4.65"
Routed to Reach DP-1 : DP-1

Runoff by SCS TR-20 method, UH=SCS, Weighted-CN, Time Span= 0.00-30.00 hrs, dt= 0.05 hrs
NY-Poughkeepsie 24-hr S1 100-yr Rainfall=8.22"

	Area (sf)	CN	Description
	9,618	69	50-75% Grass cover, Fair, HSG B
*	917	80	Pervious Pavers
	10,535	70	Weighted Average
	10,535		100.00% Pervious Area

Tc (min)	Length (feet)	Slope (ft/ft)	Velocity (ft/sec)	Capacity (cfs)	Description
6.0					**Direct Entry, Min. Tc**

Subcatchment 3: DA-3

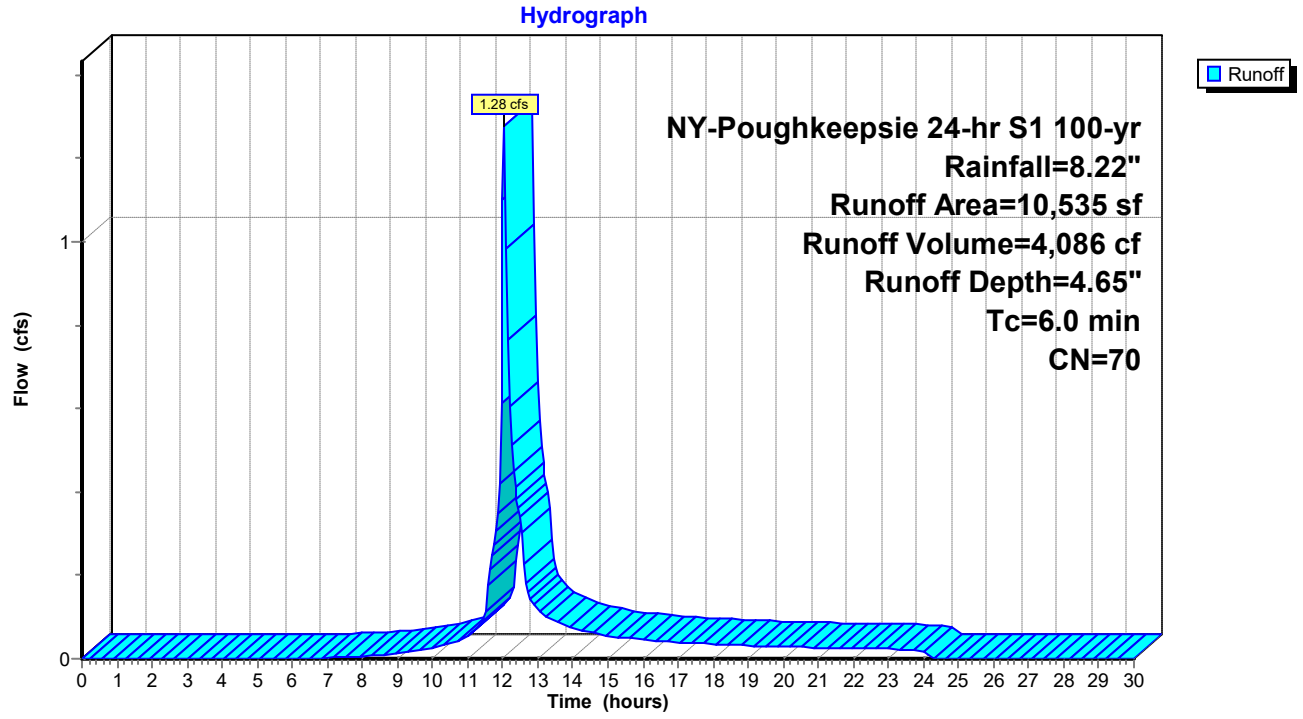

Summary for Subcatchment 4: DA-4

Runoff = 0.16 cfs @ 12.05 hrs, Volume= 520 cf, Depth= 3.61"
Routed to Reach DP-2 : DP-2

Runoff by SCS TR-20 method, UH=SCS, Weighted-CN, Time Span= 0.00-30.00 hrs, dt= 0.05 hrs
NY-Poughkeepsie 24-hr S1 100-yr Rainfall=8.22"

Area (sf)	CN	Description
1,728	61	>75% Grass cover, Good, HSG B
1,728		100.00% Pervious Area

Tc (min)	Length (feet)	Slope (ft/ft)	Velocity (ft/sec)	Capacity (cfs)	Description
6.0					**Direct Entry, Min. Tc**

Subcatchment 4: DA-4

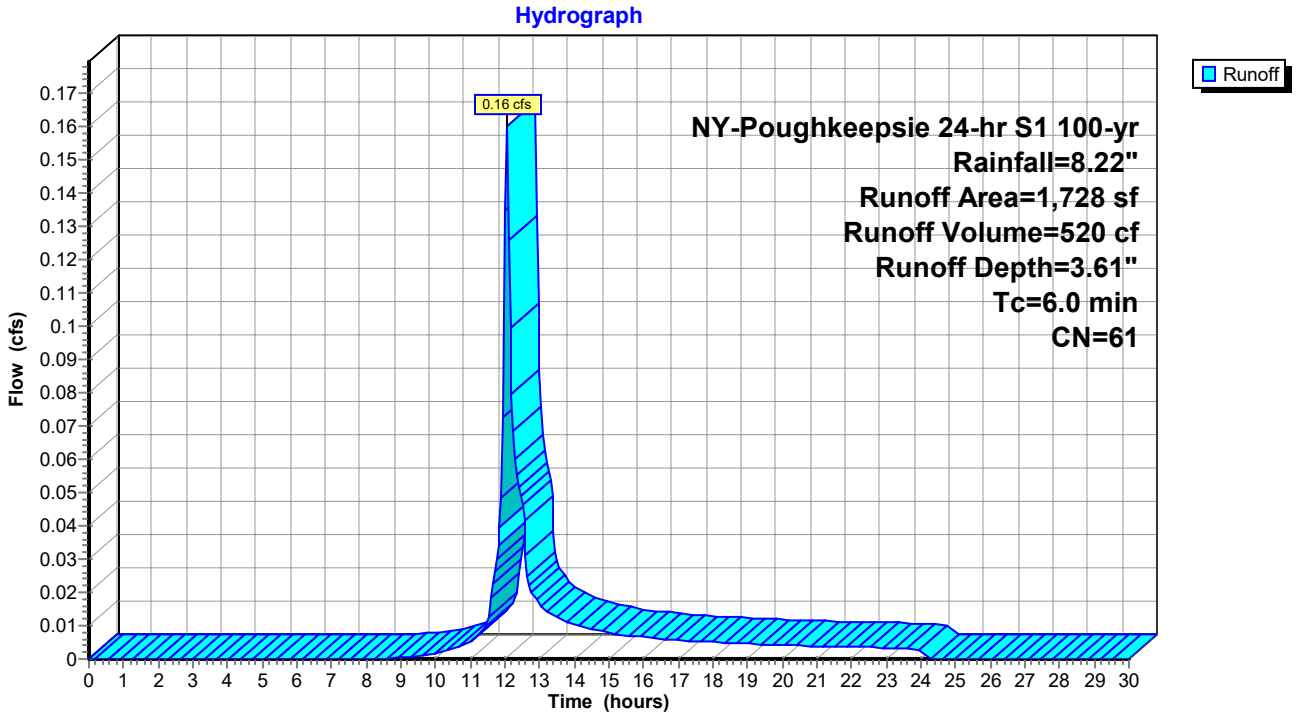

Summary for Reach DP-1: DP-1

[40] Hint: Not Described (Outflow=Inflow)

Inflow Area = 19,359 sf, 36.70% Impervious, Inflow Depth = 3.39" for 100-yr event
Inflow = 1.95 cfs @ 12.08 hrs, Volume= 5,464 cf
Outflow = 1.95 cfs @ 12.08 hrs, Volume= 5,464 cf, Atten= 0%, Lag= 0.0 min

Routing by Stor-Ind+Trans method, Time Span= 0.00-30.00 hrs, dt= 0.05 hrs

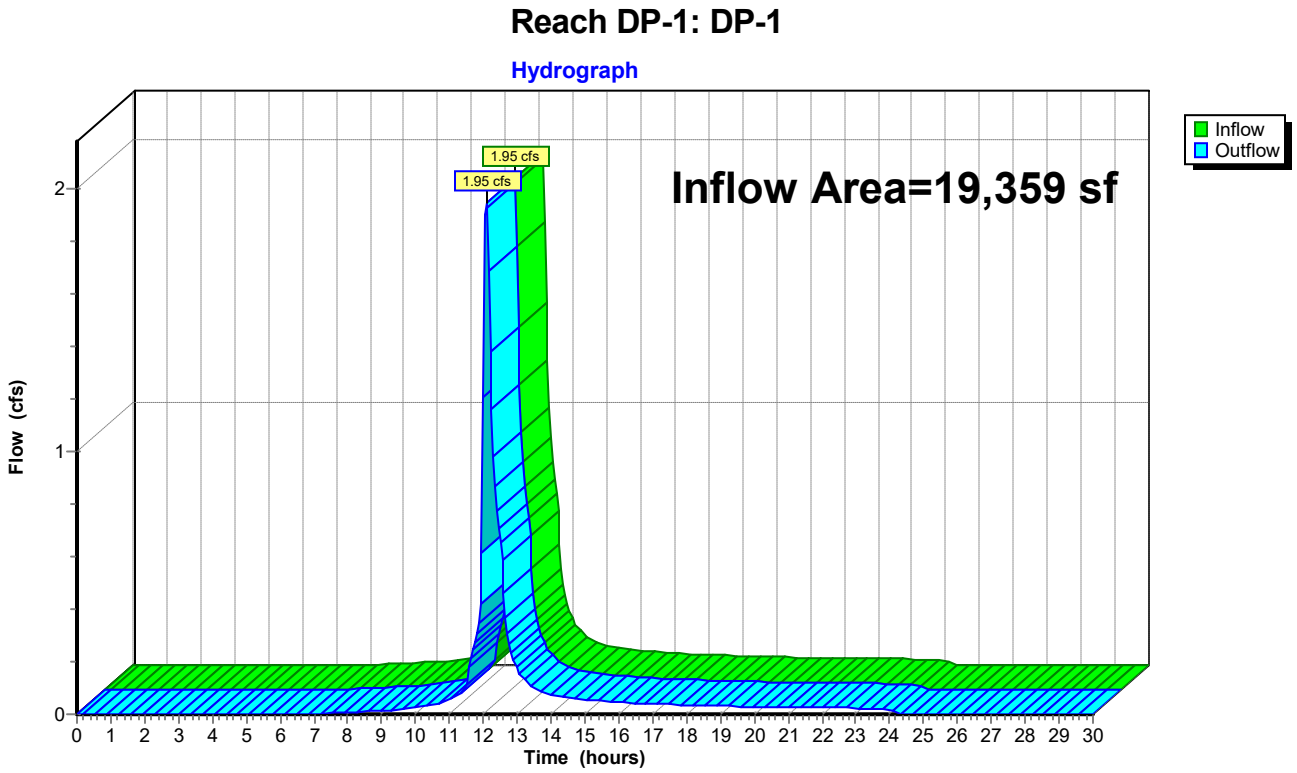

Summary for Reach DP-2: DP-2

[40] Hint: Not Described (Outflow=Inflow)

Inflow Area = 1,728 sf, 0.00% Impervious, Inflow Depth = 3.61" for 100-yr event
Inflow = 0.16 cfs @ 12.05 hrs, Volume= 520 cf
Outflow = 0.16 cfs @ 12.05 hrs, Volume= 520 cf, Atten= 0%, Lag= 0.0 min

Routing by Stor-Ind+Trans method, Time Span= 0.00-30.00 hrs, dt= 0.05 hrs

Reach DP-2: DP-2

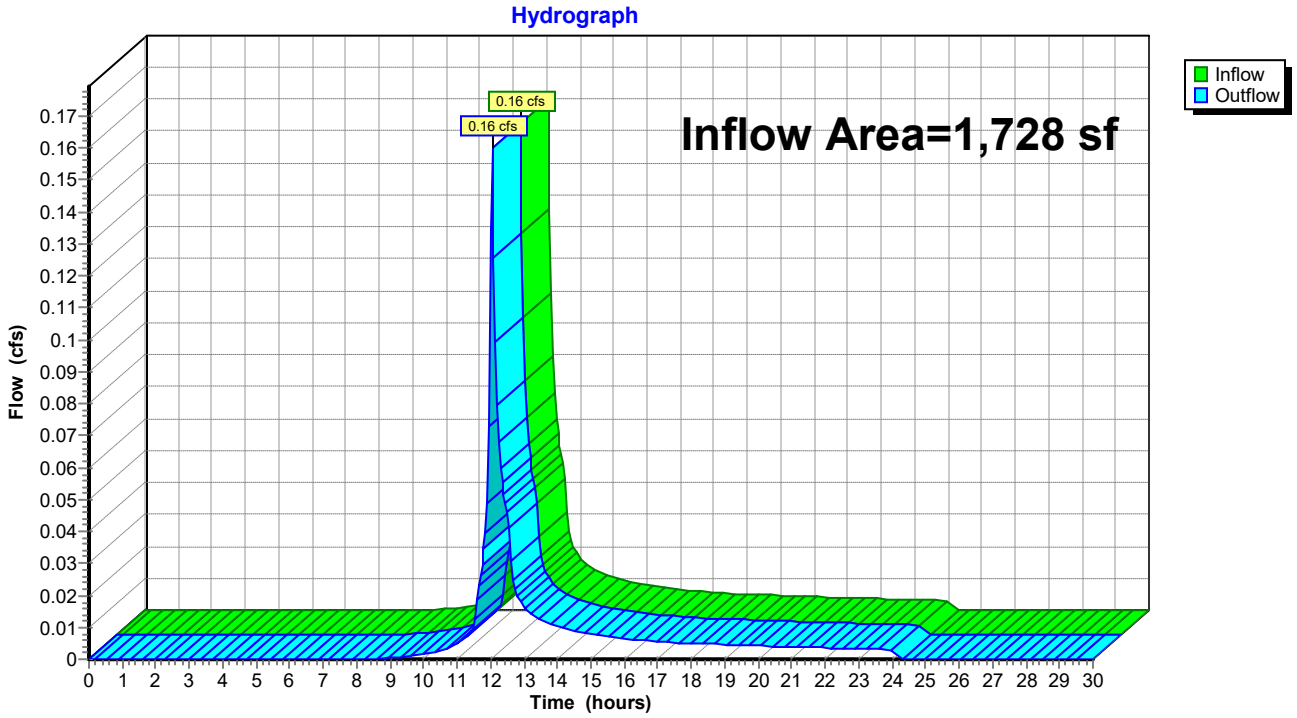

Summary for Reach DP-3: DP-3

[40] Hint: Not Described (Outflow=Inflow)

Inflow Area = 24,139 sf, 93.86% Impervious, Inflow Depth = 3.72" for 100-yr event
Inflow = 1.12 cfs @ 12.38 hrs, Volume= 7,481 cf
Outflow = 1.12 cfs @ 12.38 hrs, Volume= 7,481 cf, Atten= 0%, Lag= 0.0 min

Routing by Stor-Ind+Trans method, Time Span= 0.00-30.00 hrs, dt= 0.05 hrs

Reach DP-3: DP-3

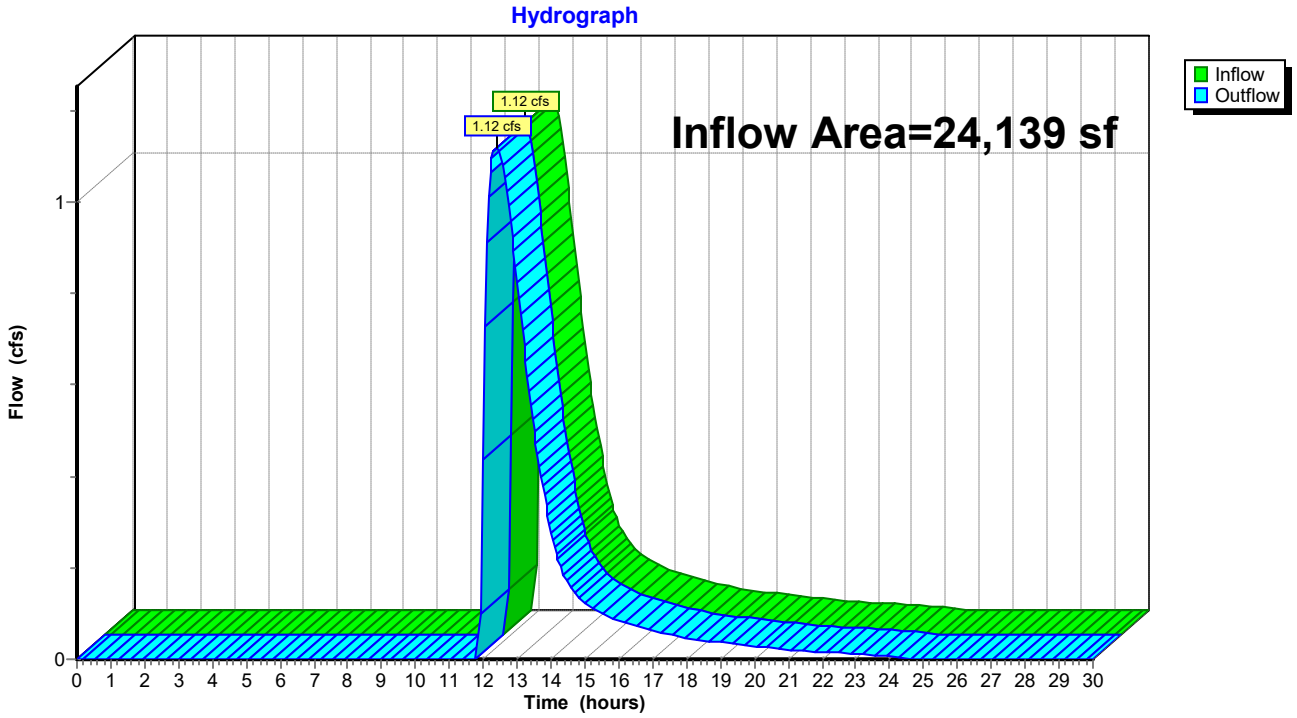

Summary for Pond 4P: Drywell

Inflow Area = 24,139 sf, 93.86% Impervious, Inflow Depth = 7.74" for 100-yr event
Inflow = 4.35 cfs @ 12.04 hrs, Volume= 15,570 cf
Outflow = 1.17 cfs @ 12.38 hrs, Volume= 12,931 cf, Atten= 73%, Lag= 20.7 min
Discarded = 0.05 cfs @ 4.25 hrs, Volume= 5,450 cf
Primary = 1.12 cfs @ 12.38 hrs, Volume= 7,481 cf
Routed to Reach DP-3 : DP-3

Routing by Stor-Ind method, Time Span= 0.00-30.00 hrs, dt= 0.05 hrs
Peak Elev= 57.69' @ 12.38 hrs Surf.Area= 2,370 sf Storage= 6,385 cf

Plug-Flow detention time= 217.6 min calculated for 12,931 cf (83% of inflow)
Center-of-Mass det. time= 137.0 min (890.0 - 753.0)

Volume	Invert	Avail.Storage	Storage Description
#1	52.50'	4,390 cf	**Custom Stage Data (Prismatic)** Listed below (Recalc) 13,414 cf Overall - 2,439 cf Embedded = 10,975 cf x 40.0% Voids
#2	53.41'	2,439 cf	**ADS_StormTech SC-800 +Cap** x 47 Inside #1 Effective Size= 45.0"W x 33.0"H => 7.11 sf x 7.12'L = 50.6 cf Overall Size= 51.0"W x 33.0"H x 7.55'L with 0.43' Overlap 47 Chambers in 9 Rows Cap Storage= 3.4 cf x 2 x 9 rows = 61.6 cf
		6,829 cf	Total Available Storage

Elevation (feet)	Surf.Area (sq-ft)	Inc.Store (cubic-feet)	Cum.Store (cubic-feet)
52.50	2,370	0	0
58.16	2,370	13,414	13,414

Device	Routing	Invert	Outlet Devices
#1	Primary	55.19'	**6.0" Round Culvert** L= 60.0' CMP, projecting, no headwall, Ke= 0.900 Inlet / Outlet Invert= 55.19' / 54.50' S= 0.0115 '/' Cc= 0.900 n= 0.010, Flow Area= 0.20 sf
#2	Discarded	52.50'	**1.000 in/hr Exfiltration over Surface area**

Discarded OutFlow Max=0.05 cfs @ 4.25 hrs HW=52.56' (Free Discharge)
↑—**2=Exfiltration** (Exfiltration Controls 0.05 cfs)

Primary OutFlow Max=1.12 cfs @ 12.38 hrs HW=57.69' (Free Discharge)
↑—**1=Culvert** (Inlet Controls 1.12 cfs @ 5.70 fps)

Pond 4P: Drywell

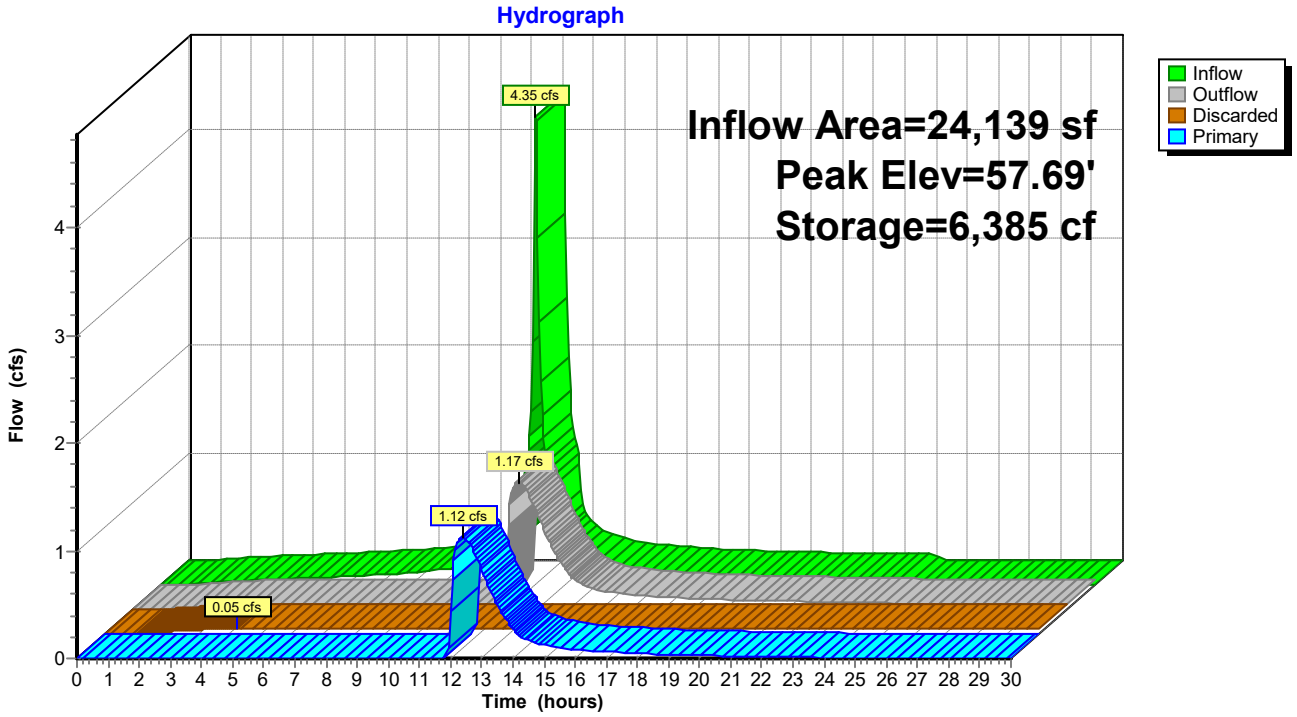

Pond 4P: Drywell

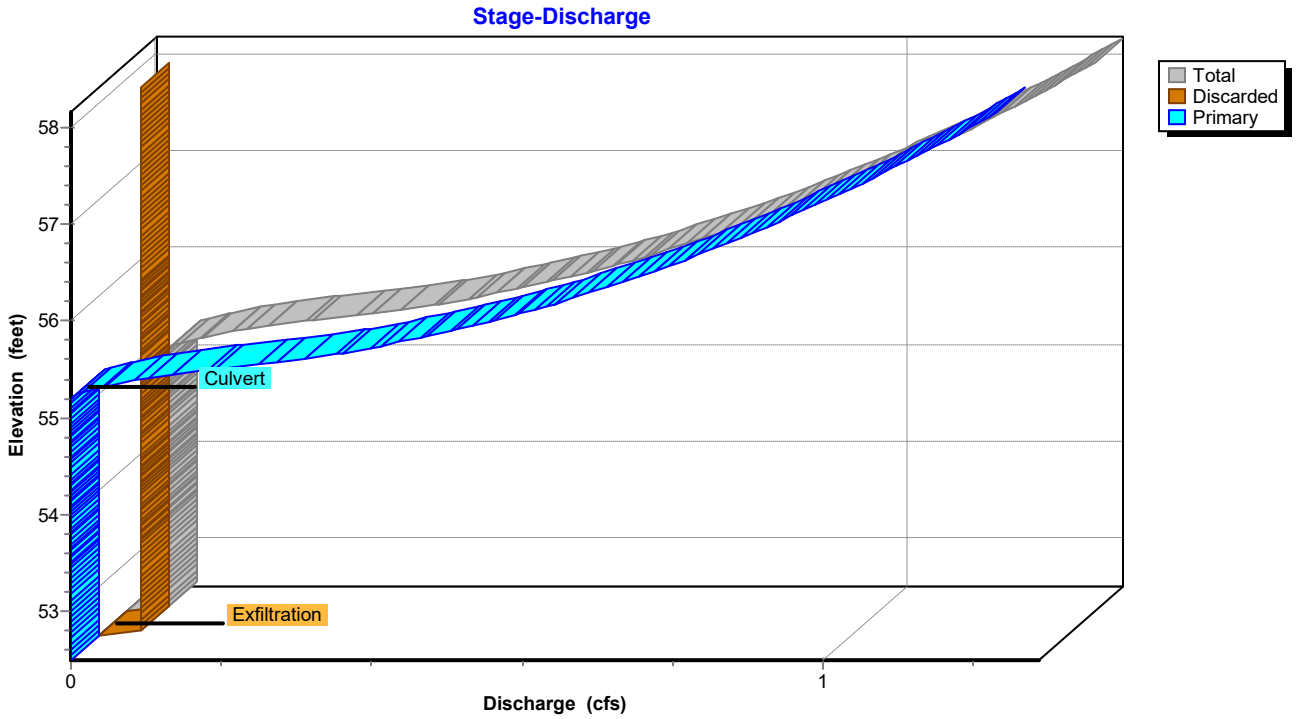

Stage-Area-Storage for Pond 4P: Drywell

Elevation (feet)	Surface (sq-ft)	Storage (cubic-feet)
52.50	**2,370**	0
52.60	2,370	95
52.70	2,370	190
52.80	2,370	284
52.90	2,370	379
53.00	2,370	474
53.10	2,370	569
53.20	2,370	664
53.30	2,370	758
53.40	2,370	853
53.50	2,370	1,017
53.60	2,370	1,188
53.70	2,370	1,358
53.80	2,370	1,528
53.90	2,370	1,696
54.00	2,370	1,863
54.10	2,370	2,029
54.20	2,370	2,194
54.30	2,370	2,357
54.40	2,370	2,519
54.50	2,370	2,680
54.60	2,370	2,839
54.70	2,370	2,996
54.80	2,370	3,151
54.90	2,370	3,304
55.00	2,370	3,455
55.10	2,370	3,604
55.20	2,370	3,750
55.30	2,370	3,894
55.40	2,370	4,034
55.50	2,370	4,171
55.60	2,370	4,304
55.70	2,370	4,432
55.80	2,370	4,554
55.90	2,370	4,669
56.00	2,370	4,775
56.10	2,370	4,875
56.20	2,370	4,971
56.30	2,370	5,066
56.40	2,370	5,161
56.50	2,370	5,256
56.60	2,370	5,350
56.70	2,370	5,445
56.80	2,370	5,540
56.90	2,370	5,635
57.00	2,370	5,730
57.10	2,370	5,824
57.20	2,370	5,919
57.30	2,370	6,014
57.40	2,370	6,109
57.50	2,370	6,204
57.60	2,370	6,298
57.70	2,370	6,393
57.80	2,370	6,488
57.90	2,370	6,583
58.00	2,370	6,678
58.10	2,370	**6,772**

Summary for Pond UGC-1: UGC-1

Inflow Area = 8,824 sf, 80.51% Impervious, Inflow Depth = 7.14" for 100-yr event
Inflow = 1.54 cfs @ 12.04 hrs, Volume= 5,252 cf
Outflow = 1.08 cfs @ 12.12 hrs, Volume= 5,252 cf, Atten= 30%, Lag= 4.9 min
Discarded = 0.11 cfs @ 11.20 hrs, Volume= 3,874 cf
Primary = 0.98 cfs @ 12.12 hrs, Volume= 1,378 cf
Routed to Reach DP-1 : DP-1

Routing by Stor-Ind method, Time Span= 0.00-30.00 hrs, dt= 0.05 hrs
Peak Elev= 41.61' @ 12.12 hrs Surf.Area= 608 sf Storage= 979 cf

Plug-Flow detention time= 32.3 min calculated for 5,243 cf (100% of inflow)
Center-of-Mass det. time= 32.2 min (808.3 - 776.0)

Volume	Invert	Avail.Storage	Storage Description
#1	40.00'	5,472 cf	**Custom Stage Data (Prismatic)** Listed below (Recalc)

Elevation (feet)	Surf.Area (sq-ft)	Inc.Store (cubic-feet)	Cum.Store (cubic-feet)
40.00	608	0	0
49.00	608	5,472	5,472

Device	Routing	Invert	Outlet Devices
#1	Discarded	40.00'	**7.500 in/hr Exfiltration over Surface area**
#2	Primary	41.00'	**12.0" Round Culvert** L= 10.0' CMP, projecting, no headwall, Ke= 0.900 Inlet / Outlet Invert= 41.00' / 40.90' S= 0.0100 '/' Cc= 0.900 n= 0.010, Flow Area= 0.79 sf

Discarded OutFlow Max=0.11 cfs @ 11.20 hrs HW=40.09' (Free Discharge)
↑—**1=Exfiltration** (Exfiltration Controls 0.11 cfs)

Primary OutFlow Max=0.93 cfs @ 12.12 hrs HW=41.59' (Free Discharge)
↑—**2=Culvert** (Barrel Controls 0.93 cfs @ 2.76 fps)

Pond UGC-1: UGC-1

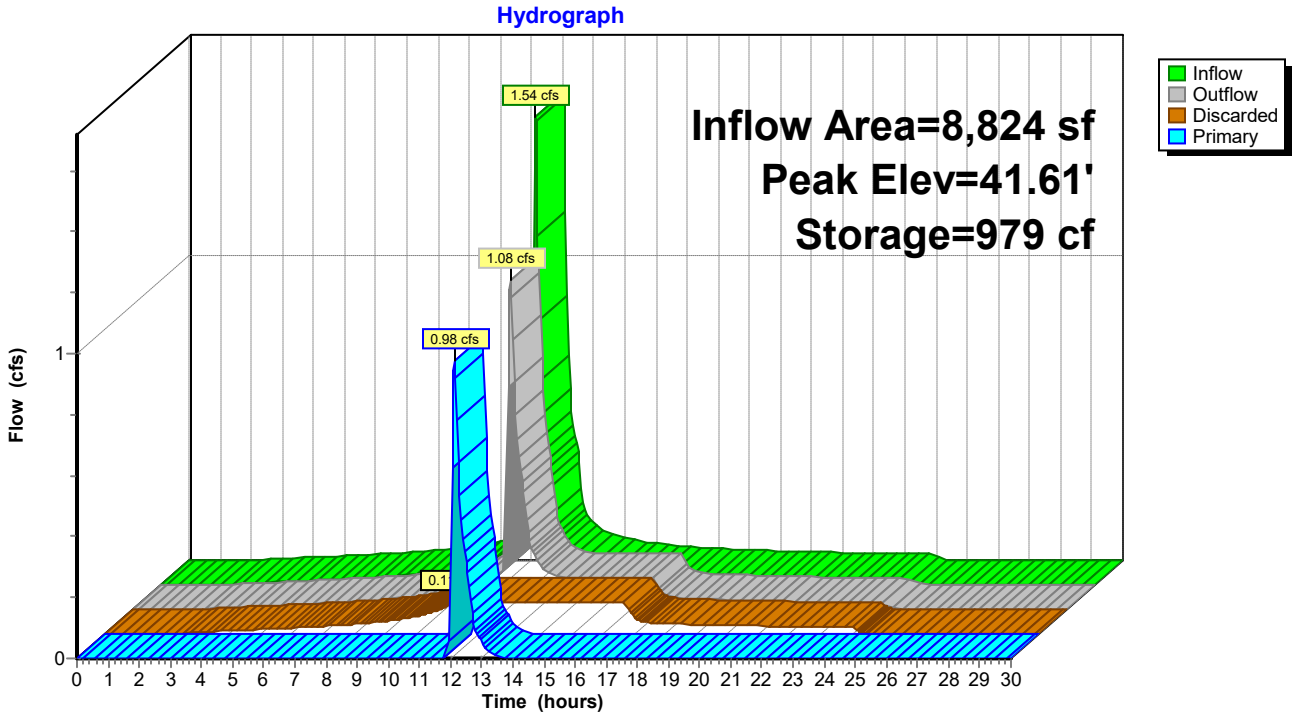

Pond UGC-1: UGC-1

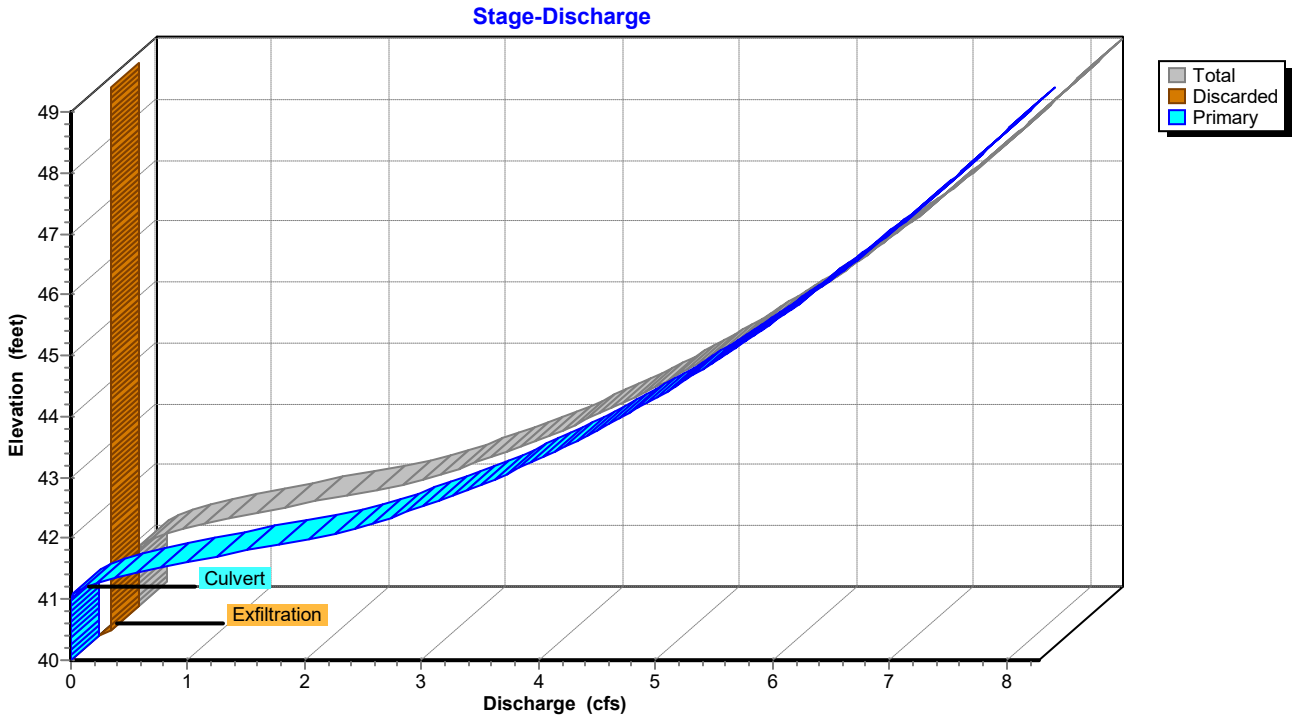

Stage-Area-Storage for Pond UGC-1: UGC-1

Elevation (feet)	Surface (sq-ft)	Storage (cubic-feet)
40.00	**608**	0
40.10	608	61
40.20	608	122
40.30	608	182
40.40	608	243
40.50	608	304
40.60	608	365
40.70	608	426
40.80	608	486
40.90	608	547
41.00	608	608
41.10	608	669
41.20	608	730
41.30	608	790
41.40	608	851
41.50	608	912
41.60	608	973
41.70	608	1,034
41.80	608	1,094
41.90	608	1,155
42.00	608	1,216
42.10	608	1,277
42.20	608	1,338
42.30	608	1,398
42.40	608	1,459
42.50	608	1,520
42.60	608	1,581
42.70	608	1,642
42.80	608	1,702
42.90	608	1,763
43.00	608	1,824
43.10	608	1,885
43.20	608	1,946
43.30	608	2,006
43.40	608	2,067
43.50	608	2,128
43.60	608	2,189
43.70	608	2,250
43.80	608	2,310
43.90	608	2,371
44.00	608	2,432
44.10	608	2,493
44.20	608	2,554
44.30	608	2,614
44.40	608	2,675
44.50	608	2,736
44.60	608	2,797
44.70	608	2,858
44.80	608	2,918
44.90	608	2,979
45.00	608	3,040
45.10	608	3,101
45.20	608	3,162
45.30	608	3,222
45.40	608	3,283
45.50	608	3,344
45.60	608	3,405
45.70	608	3,466
45.80	608	3,526
45.90	608	3,587
46.00	608	3,648
46.10	608	3,709
46.20	608	3,770
46.30	608	3,830
46.40	608	3,891
46.50	608	3,952
46.60	608	4,013
46.70	608	4,074
46.80	608	4,134
46.90	608	4,195
47.00	608	4,256
47.10	608	4,317
47.20	608	4,378
47.30	608	4,438
47.40	608	4,499
47.50	608	4,560
47.60	608	4,621
47.70	608	4,682
47.80	608	4,742
47.90	608	4,803
48.00	608	4,864
48.10	608	4,925
48.20	608	4,986
48.30	608	5,046
48.40	608	5,107
48.50	608	5,168
48.60	608	5,229
48.70	608	5,290
48.80	608	5,350
48.90	608	5,411
49.00	608	**5,472**

APPENDIX G

Map Pocket: Pre- & Post-Development Drainage Area Maps

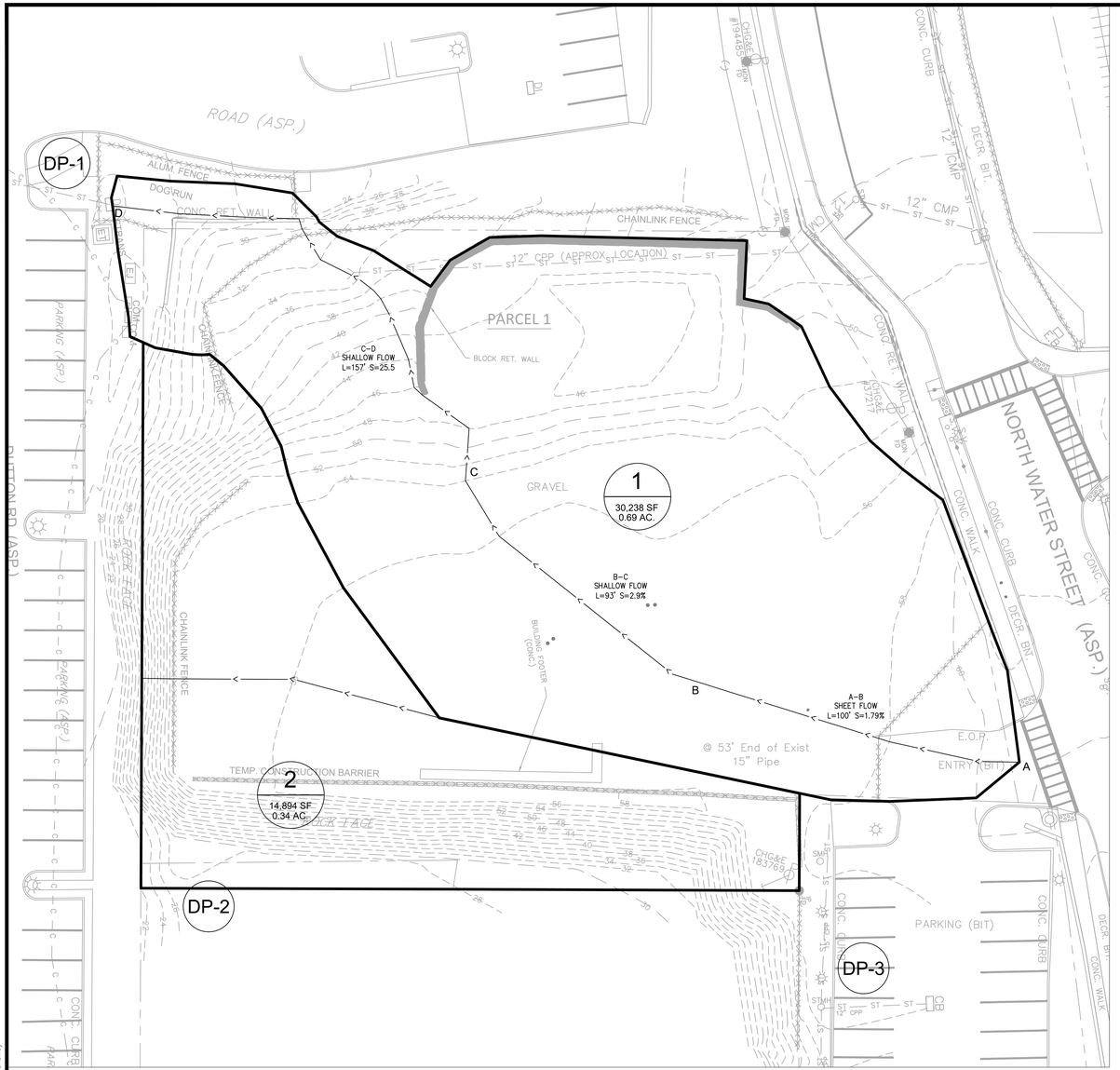

PRE-DEVELOPMENT DRAINAGE AREA MAP

SCALE: 1"=20'

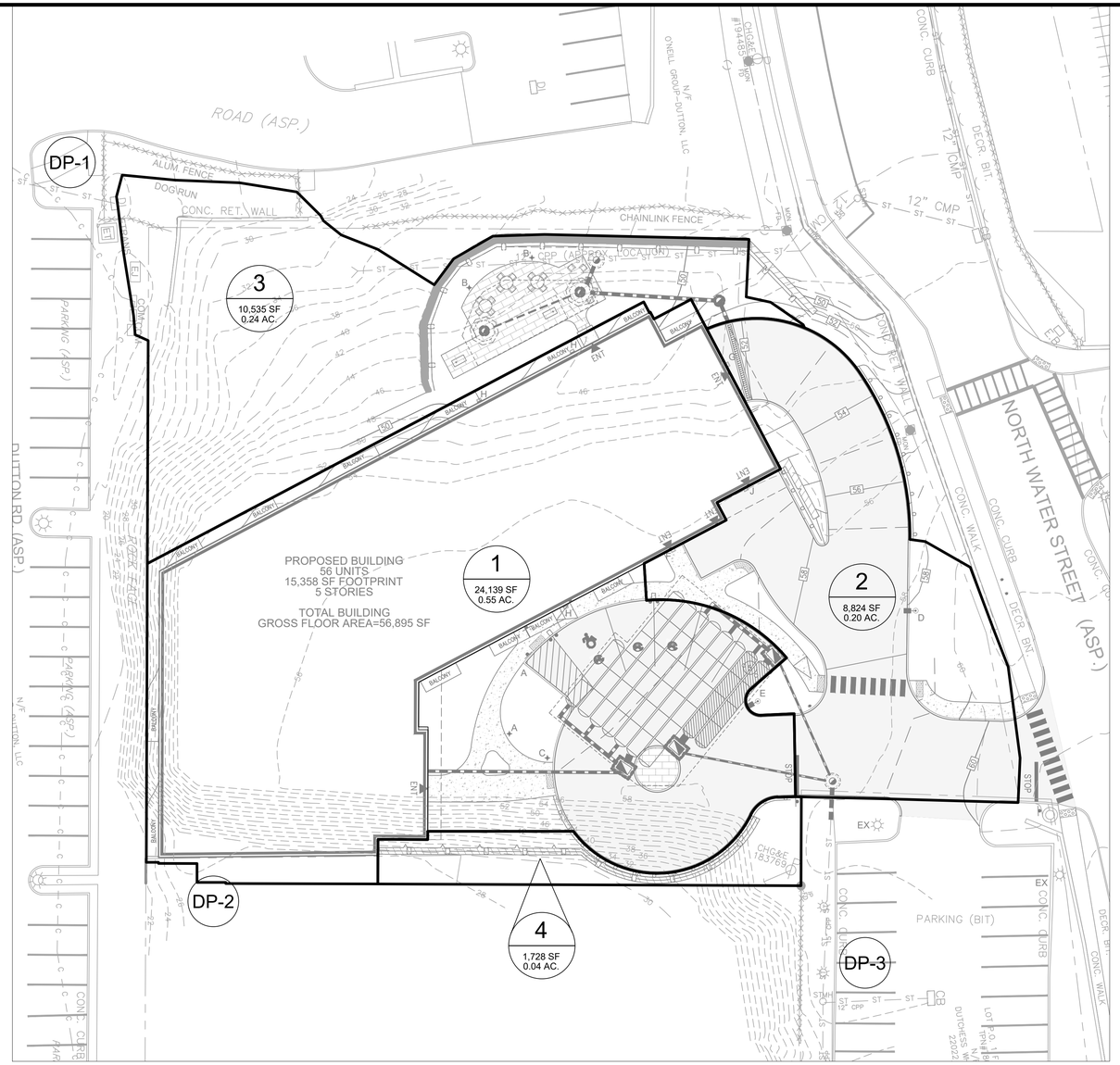

PRE-DEVELOPMENT DRAINAGE AREA MAP

SCALE: 1"=20'

LEGEND

120	EXISTING MAJOR CONTOUR LINE
123	EXISTING MINOR CONTOUR LINE
120	PROPOSED MAJOR CONTOUR LINE
123	PROPOSED MINOR CONTOUR LINE
	DRAINAGE LINE
	SOIL BOUNDARY LINE
A > B	TIME OF CONCENTRATION LINE
	TEST PIT LOCATION
MgB	SOIL TYPE DESIGNATION
1 XX,XXX SF X.XX AC.	DRAINAGE AREA DESIGNATION

GRAPHIC SCALE

20 10 0 20

SCALE IN FEET

Revisions	
1.	2025-09-09 SITE PLAN FOR ZBA SUBMISSION
2.	2025-09-30 CITY PLANNING BOARD SUBMISSION

LRC GROUP
- Land Planning
- Civil Engineering
- Environmental Services
- Land Surveying
- Landscape Architecture

160 West Street, Suite E
Cromwell, CT 06416
Tel: 860.635.2877

85 Civic Center Plaza, Suite 204
Poughkeepsie NY 12601
Tel: 845.243.2880

1000 Wyckoff Avenue, 3rd Floor
Mahwah, NJ 07430
Tel: 908.603.5730

www.lrcconsult.com

LRC Engineering & Surveying, DPC
LRC Engineering & Surveying, LLC
LRC Environmental Services, Inc.

DRAINAGE AREA MAPS

WATER STREET DEVELOPMENT

141 NORTH WATER STREET
CITY OF POUGHKEEPSIE, DUTCHESS COUNTY, NEW YORK

Design/Calcs	BLS	CAD File	DA22298501.dwg	Sheet No.
Drawn	SMC	Project No.	22-2985	DA-1
Checked	KFC	Date	2025-07-22	SHEET OF 16
Approved	LRC	Scale	1"=20'	

X:\JOBS\Jobs 2022\22-2985-141 North Water Street Pok-Sunrise Developers Corp\DWG\DA22298501.dwg 9/26/2025 7:32 AM Batoskey

APPENDIX H

25-Year Hydraulic Analysis

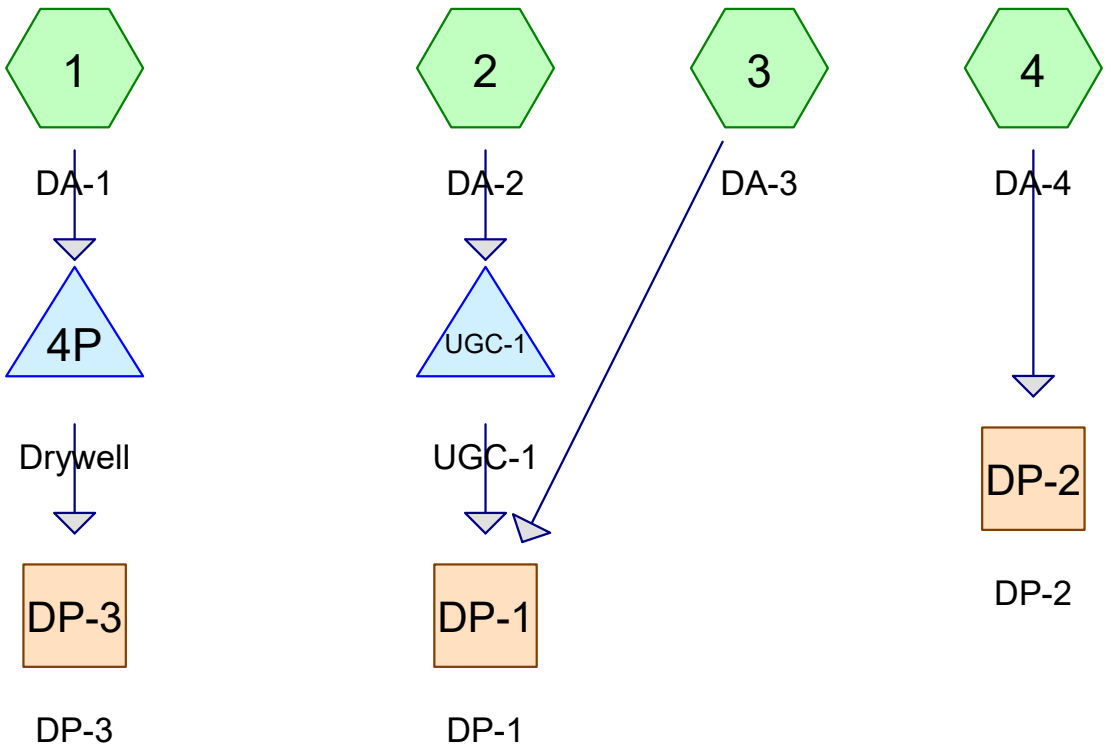

Subcat Reach Pond Link

Routing Diagram for 141 N Water_POST
Prepared by The LRC Group
HydroCAD® 10.20-6a s/n 02009 © 2024 HydroCAD Software Solutions LLC

Rainfall Events Listing (selected events)

Event#	Event Name	Storm Type	Curve	Mode	Duration (hours)	B/B	Depth (inches)	AMC
1	25-yr	NY-Poughkeepsie 24-hr S1	25-yr	Default	24.00	1	5.85	2

Area Listing (all nodes)

Area (sq-ft)	CN	Description (subcatchment-numbers)
9,618	69	50-75% Grass cover, Fair, HSG B (3)
4,930	61	>75% Grass cover, Good, HSG B (1, 2, 4)
12,884	98	Paved parking, HSG B (1, 2)
917	80	Pervious Pavers (3)
16,877	98	Roofs, HSG B (1)
45,226	**87**	**TOTAL AREA**

Soil Listing (all nodes)

Area (sq-ft)	Soil Group	Subcatchment Numbers
0	HSG A	
44,309	HSG B	1, 2, 3, 4
0	HSG C	
0	HSG D	
917	Other	3
45,226		**TOTAL AREA**

Ground Covers (all nodes)

HSG-A (sq-ft)	HSG-B (sq-ft)	HSG-C (sq-ft)	HSG-D (sq-ft)	Other (sq-ft)	Total (sq-ft)	Ground Cover	Su Nu
0	9,618	0	0	0	9,618	50-75% Grass cover, Fair	
0	4,930	0	0	0	4,930	>75% Grass cover, Good	
0	12,884	0	0	0	12,884	Paved parking	
0	0	0	0	917	917	Pervious Pavers	
0	16,877	0	0	0	16,877	Roofs	
0	**44,309**	**0**	**0**	**917**	**45,226**	**TOTAL AREA**	

Pipe Listing (all nodes)

Line#	Node Number	In-Invert (feet)	Out-Invert (feet)	Length (feet)	Slope (ft/ft)	n	Width (inches)	Diam/Height (inches)	Inside-Fill (inches)	Node Name
1	4P	55.19	54.50	60.0	0.0115	0.010	0.0	6.0	0.0	
2	UGC-1	41.00	40.90	10.0	0.0100	0.010	0.0	12.0	0.0	

Time span=0.00-30.00 hrs, dt=0.05 hrs, 601 points
Runoff by SCS TR-20 method, UH=SCS, Weighted-CN
Reach routing by Stor-Ind+Trans method - Pond routing by Stor-Ind method

Subcatchment 1: DA-1 Runoff Area=24,139 sf 93.86% Impervious Runoff Depth=5.38"
Flow Length=346' Tc=6.0 min CN=96 Runoff=3.20 cfs 10,818 cf

Subcatchment 2: DA-2 Runoff Area=8,824 sf 80.51% Impervious Runoff Depth=4.81"
Flow Length=91' Tc=6.0 min CN=91 Runoff=1.10 cfs 3,537 cf

Subcatchment 3: DA-3 Runoff Area=10,535 sf 0.00% Impervious Runoff Depth=2.69"
Tc=6.0 min CN=70 Runoff=0.76 cfs 2,359 cf

Subcatchment 4: DA-4 Runoff Area=1,728 sf 0.00% Impervious Runoff Depth=1.91"
Tc=6.0 min CN=61 Runoff=0.08 cfs 274 cf

Reach DP-1: DP-1 Inflow=0.76 cfs 2,904 cf
Outflow=0.76 cfs 2,904 cf

Reach DP-2: DP-2 Inflow=0.08 cfs 274 cf
Outflow=0.08 cfs 274 cf

Reach DP-3: DP-3 Inflow=0.54 cfs 3,139 cf
Outflow=0.54 cfs 3,139 cf

Pond 4P: Drywell Peak Elev=55.97' Storage=4,741 cf Inflow=3.20 cfs 10,818 cf
Discarded=0.05 cfs 5,179 cf Primary=0.54 cfs 3,139 cf Outflow=0.60 cfs 8,317 cf

Pond UGC-1: UGC-1 Peak Elev=41.33' Storage=811 cf Inflow=1.10 cfs 3,537 cf
Discarded=0.11 cfs 2,992 cf Primary=0.35 cfs 545 cf Outflow=0.46 cfs 3,537 cf

Total Runoff Area = 45,226 sf Runoff Volume = 16,989 cf Average Runoff Depth = 4.51"
34.19% Pervious = 15,465 sf 65.81% Impervious = 29,761 sf

Summary for Subcatchment 1: DA-1

Runoff = 3.20 cfs @ 12.04 hrs, Volume= 10,818 cf, Depth= 5.38"
Routed to Pond 4P : Drywell

Runoff by SCS TR-20 method, UH=SCS, Weighted-CN, Time Span= 0.00-30.00 hrs, dt= 0.05 hrs
NY-Poughkeepsie 24-hr S1 25-yr Rainfall=5.85"

Area (sf)	CN	Description
1,482	61	>75% Grass cover, Good, HSG B
16,877	98	Roofs, HSG B
5,780	98	Paved parking, HSG B
24,139	96	Weighted Average
1,482		6.14% Pervious Area
22,657		93.86% Impervious Area

Tc (min)	Length (feet)	Slope (ft/ft)	Velocity (ft/sec)	Capacity (cfs)	Description
2.2	100	0.0179	0.75		**Sheet Flow, A-B** n= 0.022 P2= 3.16"
0.6	93	0.0290	2.74		**Shallow Concentrated Flow, B-C** Unpaved Kv= 16.1 fps
0.7	153	0.2550	3.53		**Shallow Concentrated Flow, C-D** Short Grass Pasture Kv= 7.0 fps
3.5	346	Total, Increased to minimum Tc = 6.0 min			

Subcatchment 1: DA-1

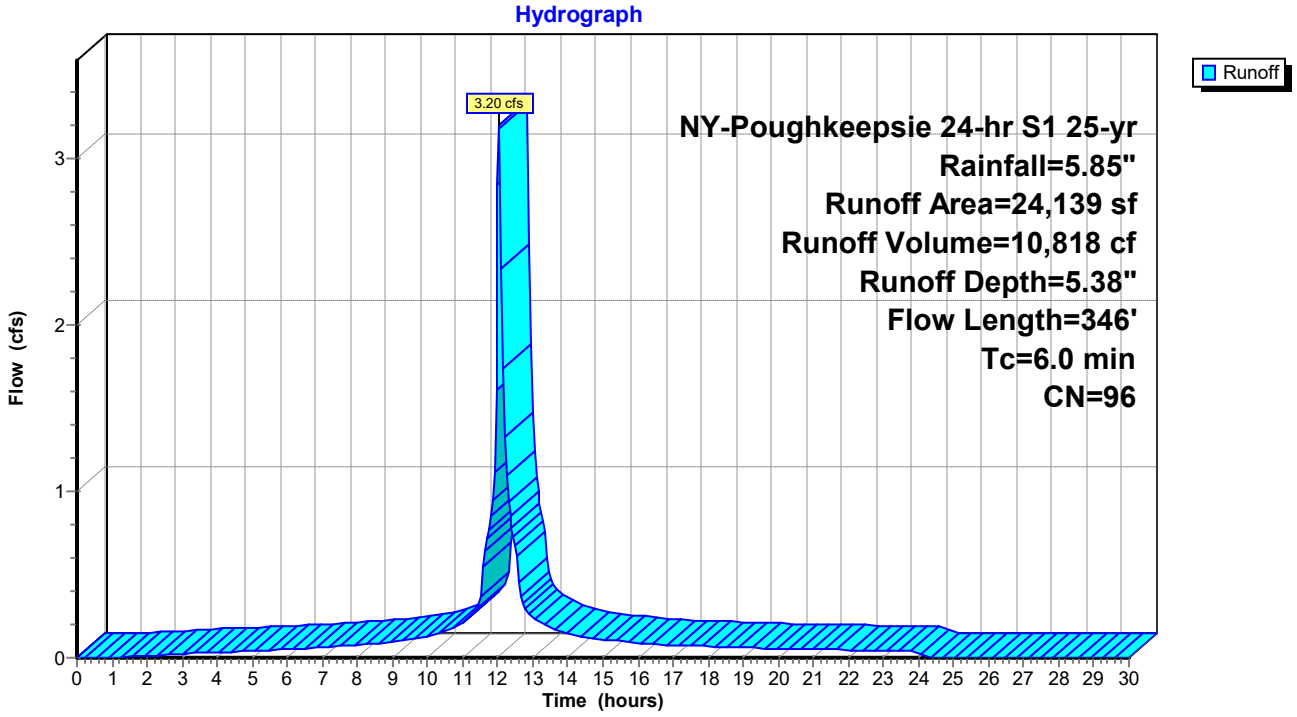

Summary for Subcatchment 2: DA-2

Runoff = 1.10 cfs @ 12.04 hrs, Volume= 3,537 cf, Depth= 4.81"
Routed to Pond UGC-1 : UGC-1

Runoff by SCS TR-20 method, UH=SCS, Weighted-CN, Time Span= 0.00-30.00 hrs, dt= 0.05 hrs
NY-Poughkeepsie 24-hr S1 25-yr Rainfall=5.85"

Area (sf)	CN	Description
1,720	61	>75% Grass cover, Good, HSG B
7,104	98	Paved parking, HSG B
8,824	91	Weighted Average
1,720		19.49% Pervious Area
7,104		80.51% Impervious Area

Tc (min)	Length (feet)	Slope (ft/ft)	Velocity (ft/sec)	Capacity (cfs)	Description
1.5	81	0.0310	0.90		**Sheet Flow, A-B** n= 0.022 P2= 3.16"
0.1	10	0.5000	3.13		**Sheet Flow, B-C** Smooth surfaces n= 0.011 P2= 3.16"
1.6	91	Total, Increased to minimum Tc = 6.0 min			

Subcatchment 2: DA-2

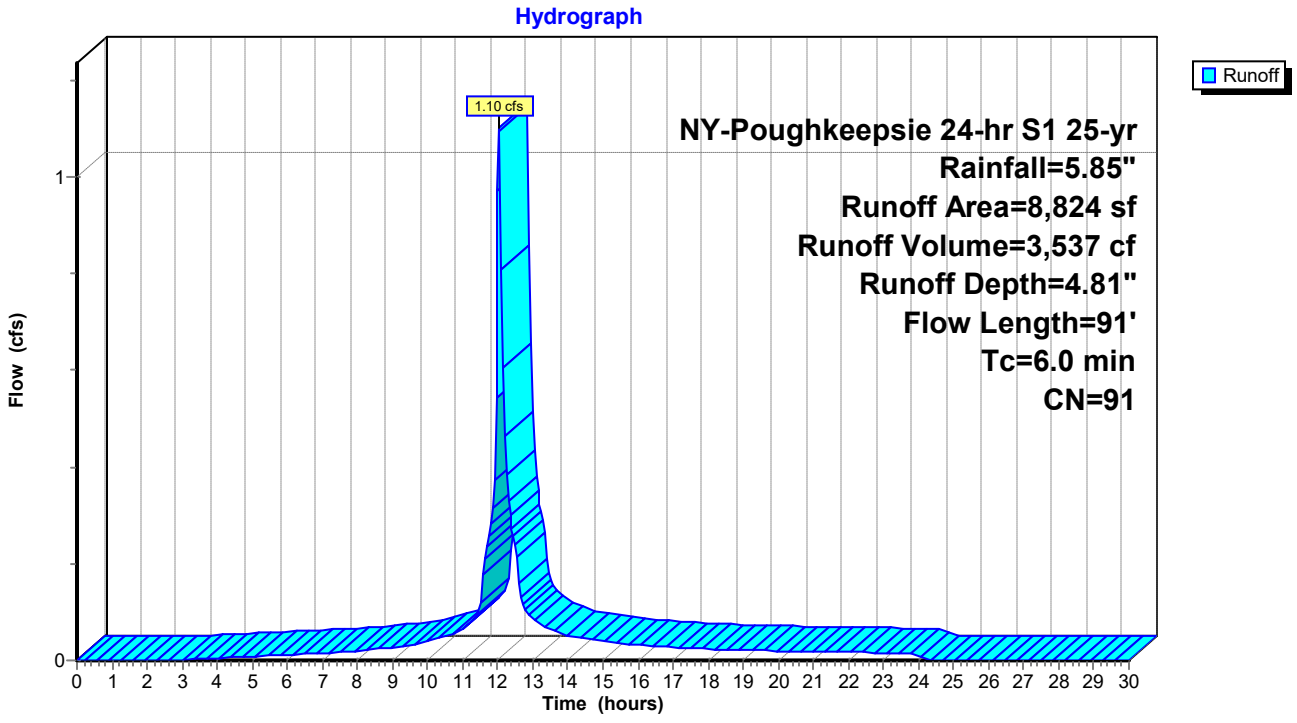

Summary for Subcatchment 3: DA-3

Runoff = 0.76 cfs @ 12.05 hrs, Volume= 2,359 cf, Depth= 2.69"
Routed to Reach DP-1 : DP-1

Runoff by SCS TR-20 method, UH=SCS, Weighted-CN, Time Span= 0.00-30.00 hrs, dt= 0.05 hrs
NY-Poughkeepsie 24-hr S1 25-yr Rainfall=5.85"

	Area (sf)	CN	Description
	9,618	69	50-75% Grass cover, Fair, HSG B
*	917	80	Pervious Pavers
	10,535	70	Weighted Average
	10,535		100.00% Pervious Area

Tc (min)	Length (feet)	Slope (ft/ft)	Velocity (ft/sec)	Capacity (cfs)	Description
6.0					**Direct Entry, Min. Tc**

Subcatchment 3: DA-3

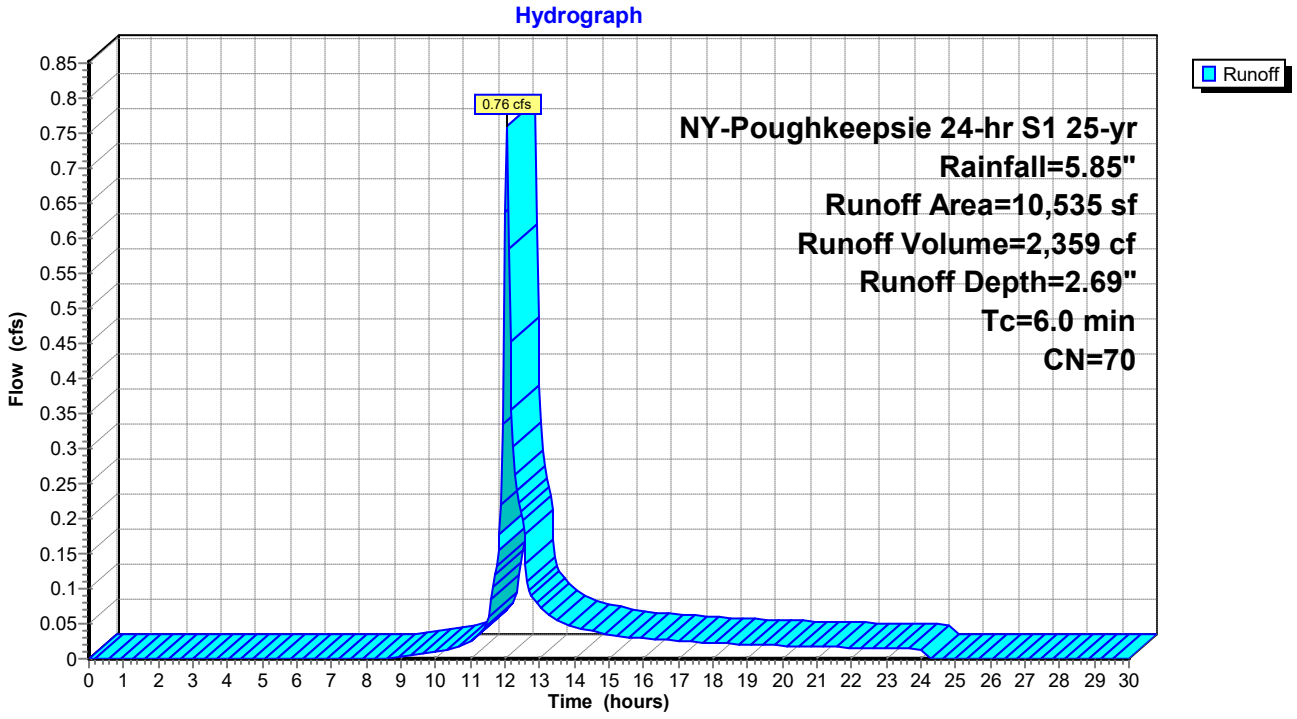

Summary for Subcatchment 4: DA-4

Runoff = 0.08 cfs @ 12.05 hrs, Volume= 274 cf, Depth= 1.91"
Routed to Reach DP-2 : DP-2

Runoff by SCS TR-20 method, UH=SCS, Weighted-CN, Time Span= 0.00-30.00 hrs, dt= 0.05 hrs
NY-Poughkeepsie 24-hr S1 25-yr Rainfall=5.85"

Area (sf)	CN	Description
1,728	61	>75% Grass cover, Good, HSG B
1,728		100.00% Pervious Area

Tc (min)	Length (feet)	Slope (ft/ft)	Velocity (ft/sec)	Capacity (cfs)	Description
6.0					**Direct Entry, Min. Tc**

Subcatchment 4: DA-4

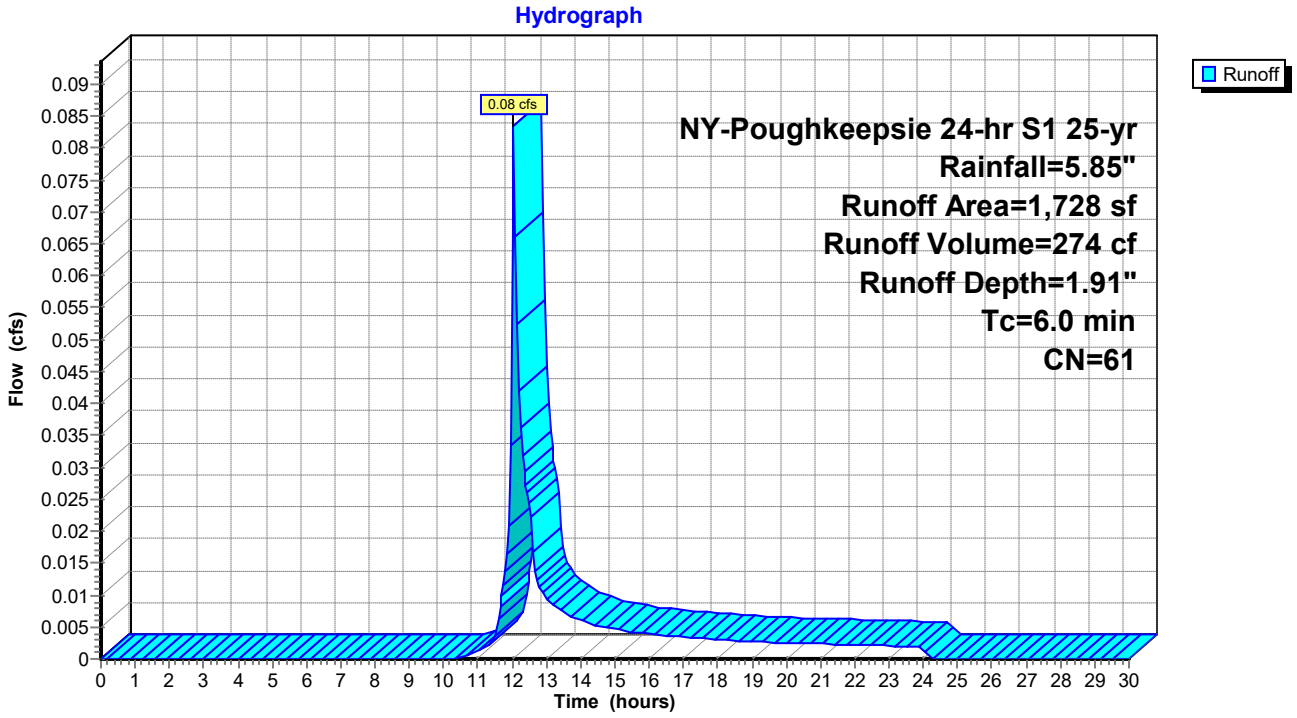

Summary for Reach DP-1: DP-1

[40] Hint: Not Described (Outflow=Inflow)

Inflow Area = 19,359 sf, 36.70% Impervious, Inflow Depth = 1.80" for 25-yr event
Inflow = 0.76 cfs @ 12.05 hrs, Volume= 2,904 cf
Outflow = 0.76 cfs @ 12.05 hrs, Volume= 2,904 cf, Atten= 0%, Lag= 0.0 min

Routing by Stor-Ind+Trans method, Time Span= 0.00-30.00 hrs, dt= 0.05 hrs

Reach DP-1: DP-1

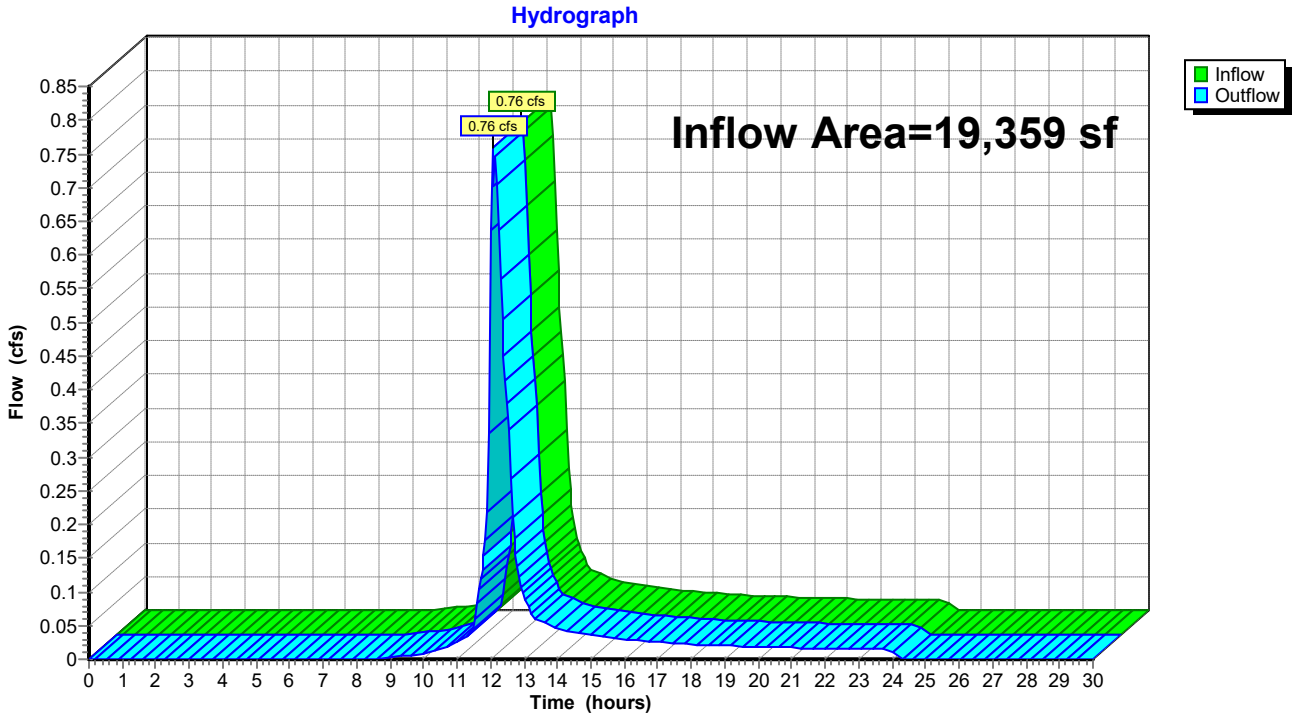

Summary for Reach DP-2: DP-2

[40] Hint: Not Described (Outflow=Inflow)

Inflow Area = 1,728 sf, 0.00% Impervious, Inflow Depth = 1.91" for 25-yr event
Inflow = 0.08 cfs @ 12.05 hrs, Volume= 274 cf
Outflow = 0.08 cfs @ 12.05 hrs, Volume= 274 cf, Atten= 0%, Lag= 0.0 min

Routing by Stor-Ind+Trans method, Time Span= 0.00-30.00 hrs, dt= 0.05 hrs

Reach DP-2: DP-2

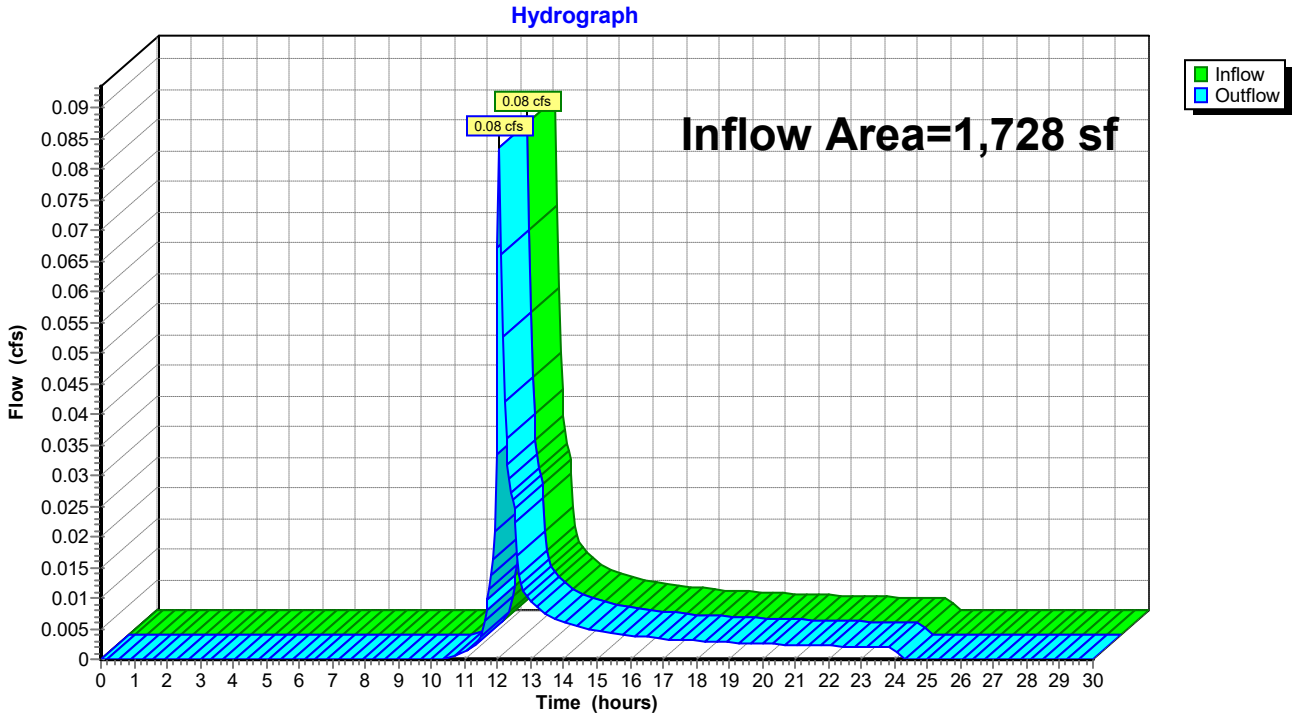

Summary for Reach DP-3: DP-3

[40] Hint: Not Described (Outflow=Inflow)

Inflow Area = 24,139 sf, 93.86% Impervious, Inflow Depth = 1.56" for 25-yr event
Inflow = 0.54 cfs @ 12.55 hrs, Volume= 3,139 cf
Outflow = 0.54 cfs @ 12.55 hrs, Volume= 3,139 cf, Atten= 0%, Lag= 0.0 min

Routing by Stor-Ind+Trans method, Time Span= 0.00-30.00 hrs, dt= 0.05 hrs

Reach DP-3: DP-3

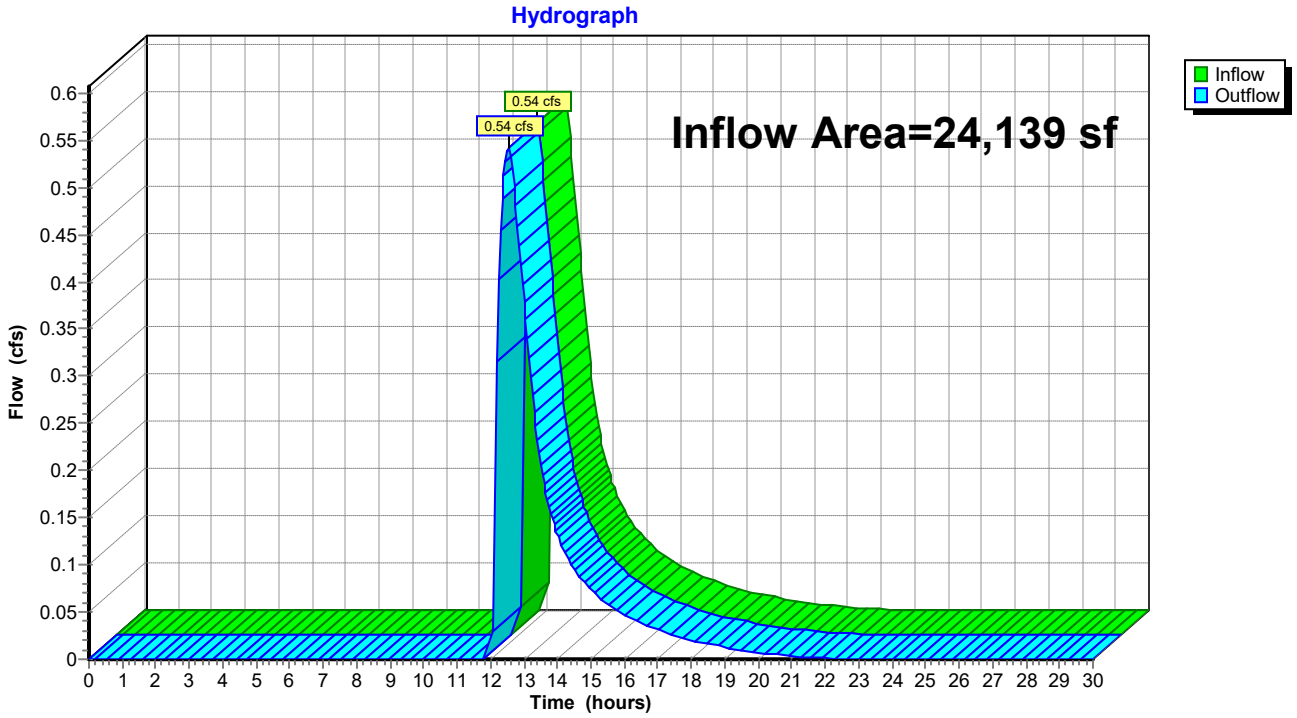

Summary for Pond 4P: Drywell

Inflow Area = 24,139 sf, 93.86% Impervious, Inflow Depth = 5.38" for 25-yr event
Inflow = 3.20 cfs @ 12.04 hrs, Volume= 10,818 cf
Outflow = 0.60 cfs @ 12.55 hrs, Volume= 8,317 cf, Atten= 81%, Lag= 30.4 min
Discarded = 0.05 cfs @ 6.60 hrs, Volume= 5,179 cf
Primary = 0.54 cfs @ 12.55 hrs, Volume= 3,139 cf
Routed to Reach DP-3 : DP-3

Routing by Stor-Ind method, Time Span= 0.00-30.00 hrs, dt= 0.05 hrs
Peak Elev= 55.97' @ 12.55 hrs Surf.Area= 2,370 sf Storage= 4,741 cf

Plug-Flow detention time= 277.4 min calculated for 8,317 cf (77% of inflow)
Center-of-Mass det. time= 181.0 min (941.9 - 761.0)

Volume	Invert	Avail.Storage	Storage Description
#1	52.50'	4,390 cf	**Custom Stage Data (Prismatic)** Listed below (Recalc) 13,414 cf Overall - 2,439 cf Embedded = 10,975 cf x 40.0% Voids
#2	53.41'	2,439 cf	**ADS_StormTech SC-800 +Cap** x 47 Inside #1 Effective Size= 45.0"W x 33.0"H => 7.11 sf x 7.12'L = 50.6 cf Overall Size= 51.0"W x 33.0"H x 7.55'L with 0.43' Overlap 47 Chambers in 9 Rows Cap Storage= 3.4 cf x 2 x 9 rows = 61.6 cf
		6,829 cf	Total Available Storage

Elevation (feet)	Surf.Area (sq-ft)	Inc.Store (cubic-feet)	Cum.Store (cubic-feet)
52.50	2,370	0	0
58.16	2,370	13,414	13,414

Device	Routing	Invert	Outlet Devices
#1	Primary	55.19'	**6.0" Round Culvert** L= 60.0' CMP, projecting, no headwall, Ke= 0.900 Inlet / Outlet Invert= 55.19' / 54.50' S= 0.0115 '/' Cc= 0.900 n= 0.010, Flow Area= 0.20 sf
#2	Discarded	52.50'	**1.000 in/hr Exfiltration over Surface area**

Discarded OutFlow Max=0.05 cfs @ 6.60 hrs HW=52.56' (Free Discharge)
↑—**2=Exfiltration** (Exfiltration Controls 0.05 cfs)

Primary OutFlow Max=0.54 cfs @ 12.55 hrs HW=55.97' (Free Discharge)
↑—**1=Culvert** (Inlet Controls 0.54 cfs @ 2.76 fps)

Pond 4P: Drywell

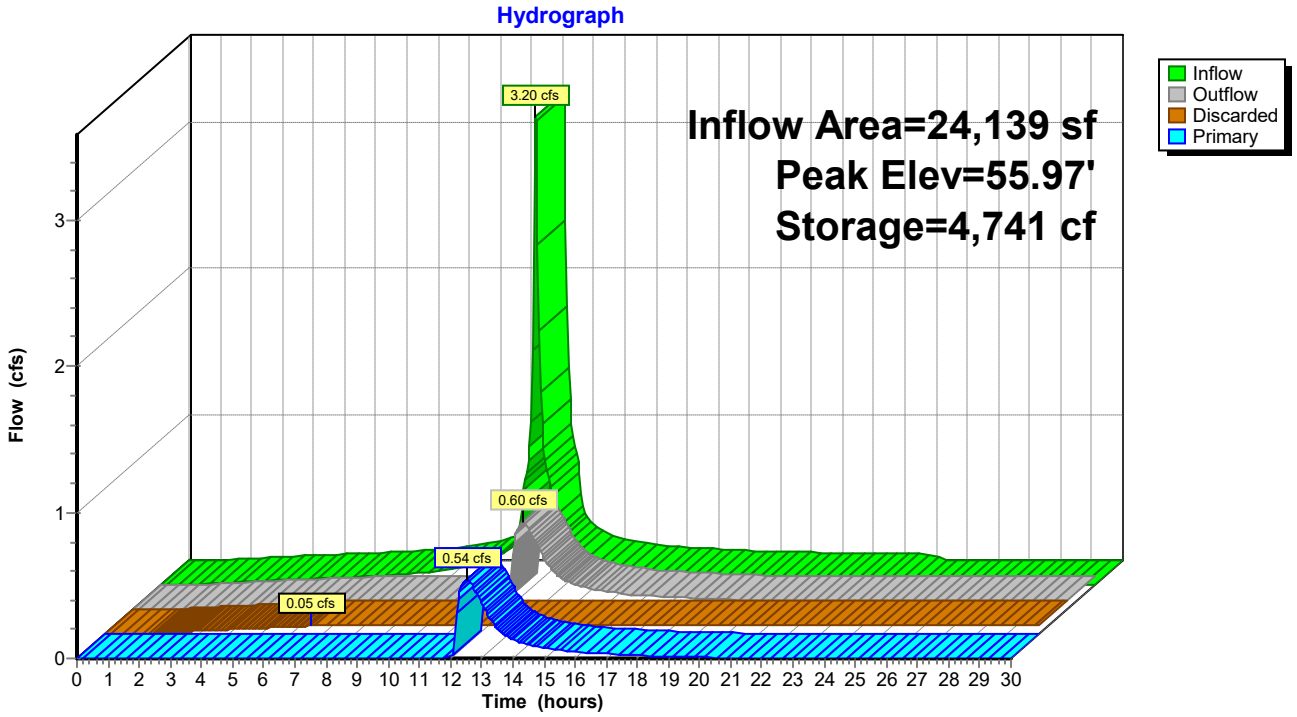

Pond 4P: Drywell

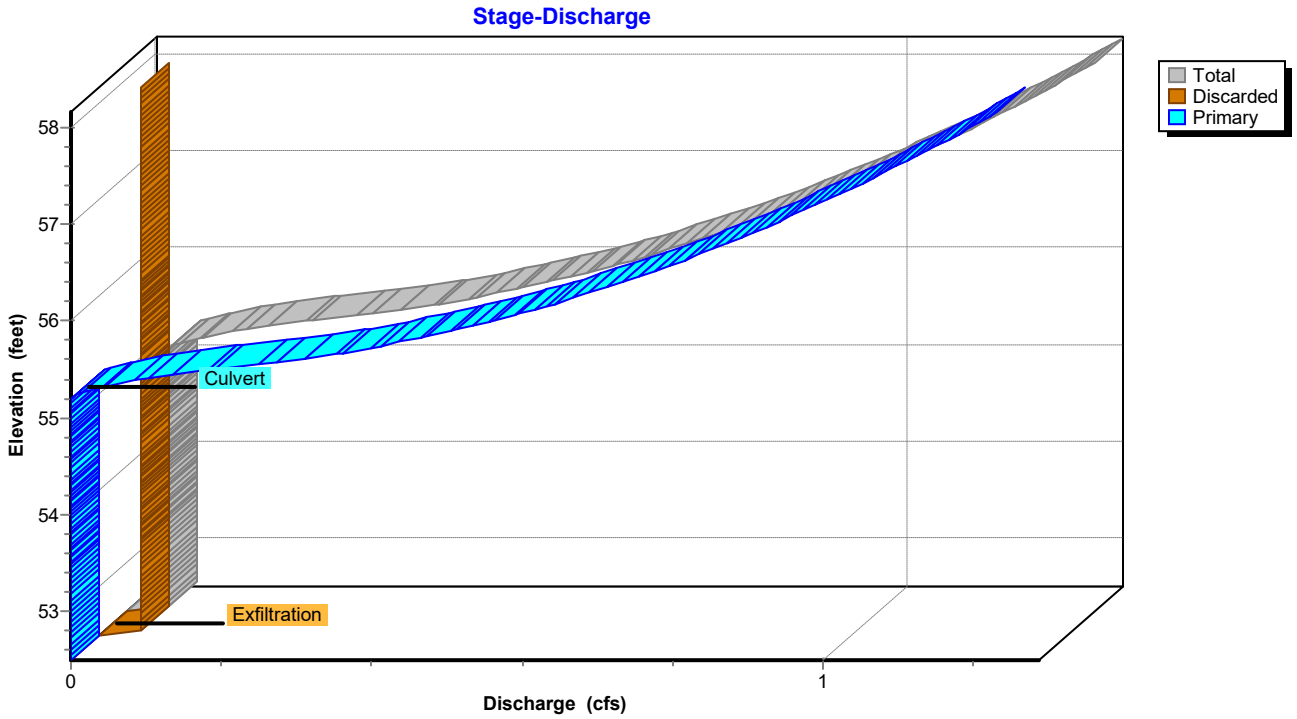

Stage-Area-Storage for Pond 4P: Drywell

Elevation (feet)	Surface (sq-ft)	Storage (cubic-feet)
52.50	**2,370**	0
52.60	2,370	95
52.70	2,370	190
52.80	2,370	284
52.90	2,370	379
53.00	2,370	474
53.10	2,370	569
53.20	2,370	664
53.30	2,370	758
53.40	2,370	853
53.50	2,370	1,017
53.60	2,370	1,188
53.70	2,370	1,358
53.80	2,370	1,528
53.90	2,370	1,696
54.00	2,370	1,863
54.10	2,370	2,029
54.20	2,370	2,194
54.30	2,370	2,357
54.40	2,370	2,519
54.50	2,370	2,680
54.60	2,370	2,839
54.70	2,370	2,996
54.80	2,370	3,151
54.90	2,370	3,304
55.00	2,370	3,455
55.10	2,370	3,604
55.20	2,370	3,750
55.30	2,370	3,894
55.40	2,370	4,034
55.50	2,370	4,171
55.60	2,370	4,304
55.70	2,370	4,432
55.80	2,370	4,554
55.90	2,370	4,669
56.00	2,370	4,775
56.10	2,370	4,875
56.20	2,370	4,971
56.30	2,370	5,066
56.40	2,370	5,161
56.50	2,370	5,256
56.60	2,370	5,350
56.70	2,370	5,445
56.80	2,370	5,540
56.90	2,370	5,635
57.00	2,370	5,730
57.10	2,370	5,824
57.20	2,370	5,919
57.30	2,370	6,014
57.40	2,370	6,109
57.50	2,370	6,204
57.60	2,370	6,298
57.70	2,370	6,393
57.80	2,370	6,488
57.90	2,370	6,583
58.00	2,370	6,678
58.10	2,370	**6,772**

Summary for Pond UGC-1: UGC-1

Inflow Area = 8,824 sf, 80.51% Impervious, Inflow Depth = 4.81" for 25-yr event
Inflow = 1.10 cfs @ 12.04 hrs, Volume= 3,537 cf
Outflow = 0.46 cfs @ 12.22 hrs, Volume= 3,537 cf, Atten= 58%, Lag= 10.5 min
Discarded = 0.11 cfs @ 11.60 hrs, Volume= 2,992 cf
Primary = 0.35 cfs @ 12.22 hrs, Volume= 545 cf
Routed to Reach DP-1 : DP-1

Routing by Stor-Ind method, Time Span= 0.00-30.00 hrs, dt= 0.05 hrs
Peak Elev= 41.33' @ 12.22 hrs Surf.Area= 608 sf Storage= 811 cf

Plug-Flow detention time= 35.6 min calculated for 3,531 cf (100% of inflow)
Center-of-Mass det. time= 35.5 min (823.4 - 787.9)

Volume	Invert	Avail.Storage	Storage Description
#1	40.00'	5,472 cf	**Custom Stage Data (Prismatic)** Listed below (Recalc)

Elevation (feet)	Surf.Area (sq-ft)	Inc.Store (cubic-feet)	Cum.Store (cubic-feet)
40.00	608	0	0
49.00	608	5,472	5,472

Device	Routing	Invert	Outlet Devices
#1	Discarded	40.00'	**7.500 in/hr Exfiltration over Surface area**
#2	Primary	41.00'	**12.0" Round Culvert** L= 10.0' CMP, projecting, no headwall, Ke= 0.900 Inlet / Outlet Invert= 41.00' / 40.90' S= 0.0100 '/' Cc= 0.900 n= 0.010, Flow Area= 0.79 sf

Discarded OutFlow Max=0.11 cfs @ 11.60 hrs HW=40.10' (Free Discharge)
↑—**1=Exfiltration** (Exfiltration Controls 0.11 cfs)

Primary OutFlow Max=0.34 cfs @ 12.22 hrs HW=41.33' (Free Discharge)
↑—**2=Culvert** (Barrel Controls 0.34 cfs @ 2.27 fps)

Pond UGC-1: UGC-1

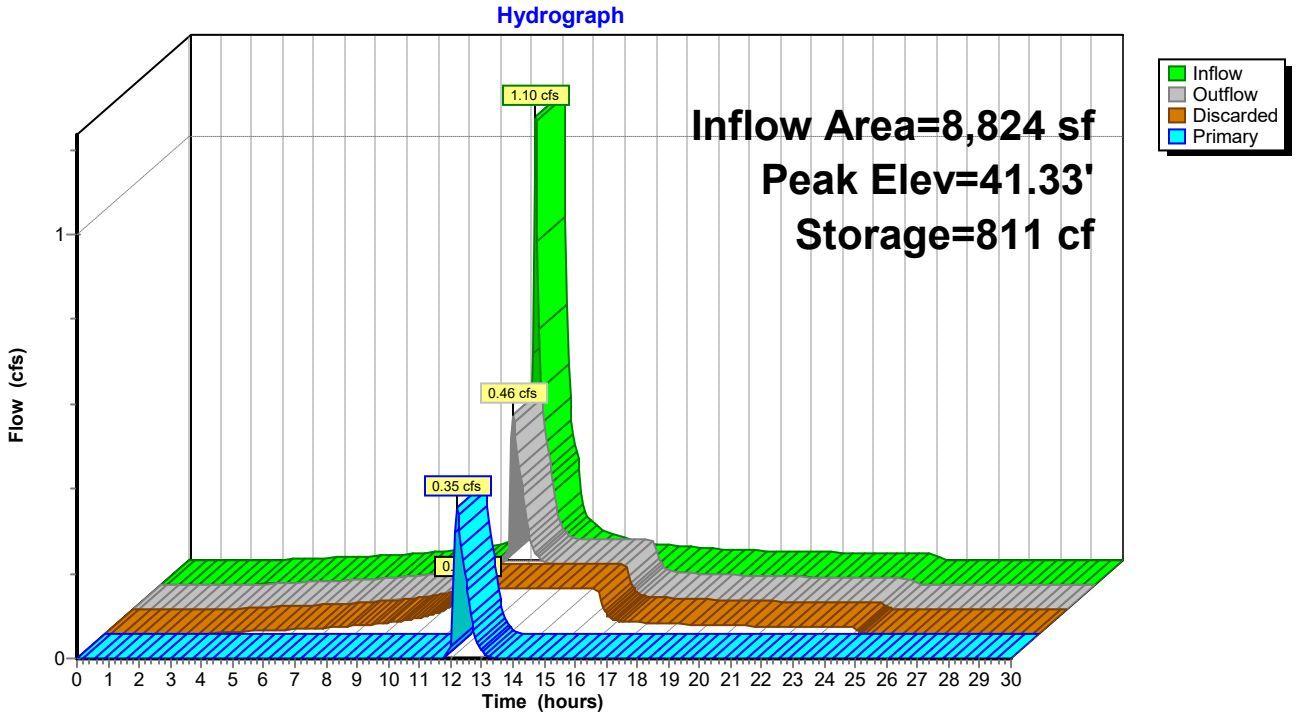

Pond UGC-1: UGC-1

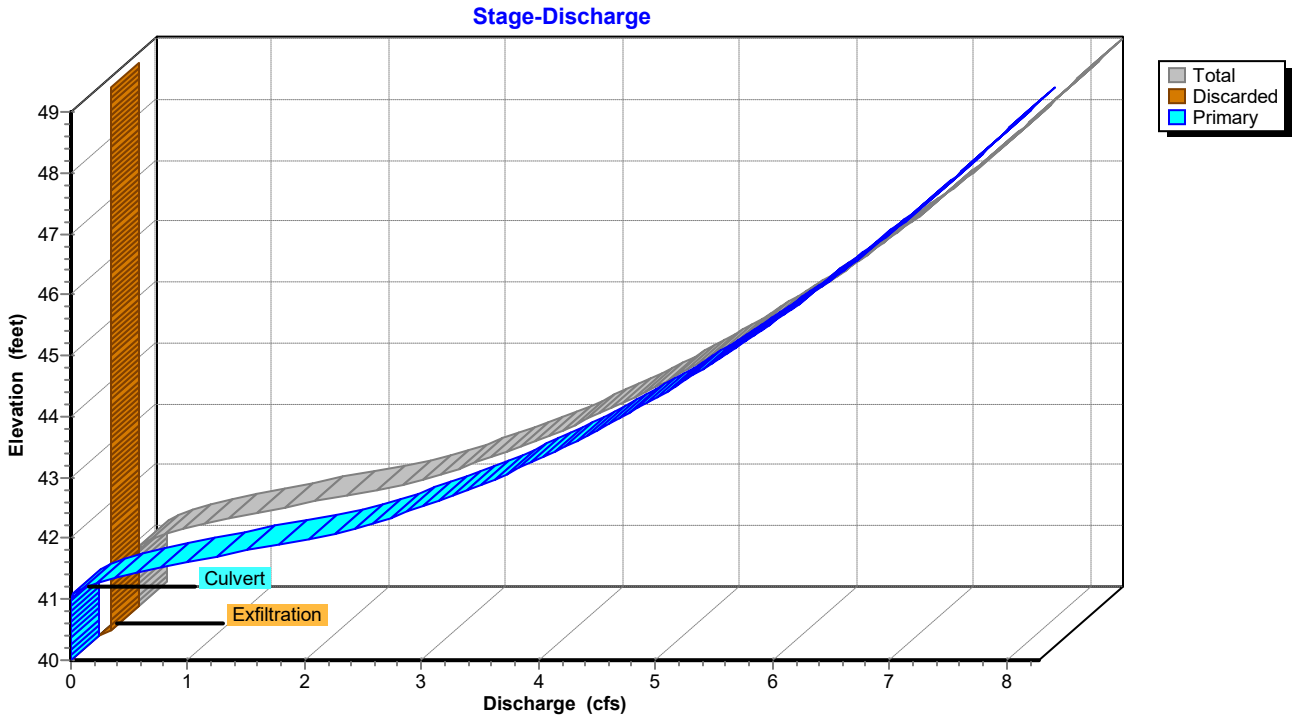

Stage-Area-Storage for Pond UGC-1: UGC-1

Elevation (feet)	Surface (sq-ft)	Storage (cubic-feet)
40.00	**608**	0
40.10	608	61
40.20	608	122
40.30	608	182
40.40	608	243
40.50	608	304
40.60	608	365
40.70	608	426
40.80	608	486
40.90	608	547
41.00	608	608
41.10	608	669
41.20	608	730
41.30	608	790
41.40	608	851
41.50	608	912
41.60	608	973
41.70	608	1,034
41.80	608	1,094
41.90	608	1,155
42.00	608	1,216
42.10	608	1,277
42.20	608	1,338
42.30	608	1,398
42.40	608	1,459
42.50	608	1,520
42.60	608	1,581
42.70	608	1,642
42.80	608	1,702
42.90	608	1,763
43.00	608	1,824
43.10	608	1,885
43.20	608	1,946
43.30	608	2,006
43.40	608	2,067
43.50	608	2,128
43.60	608	2,189
43.70	608	2,250
43.80	608	2,310
43.90	608	2,371
44.00	608	2,432
44.10	608	2,493
44.20	608	2,554
44.30	608	2,614
44.40	608	2,675
44.50	608	2,736
44.60	608	2,797
44.70	608	2,858
44.80	608	2,918
44.90	608	2,979
45.00	608	3,040
45.10	608	3,101
45.20	608	3,162
45.30	608	3,222
45.40	608	3,283
45.50	608	3,344
45.60	608	3,405
45.70	608	3,466
45.80	608	3,526
45.90	608	3,587
46.00	608	3,648
46.10	608	3,709
46.20	608	3,770
46.30	608	3,830
46.40	608	3,891
46.50	608	3,952
46.60	608	4,013
46.70	608	4,074
46.80	608	4,134
46.90	608	4,195
47.00	608	4,256
47.10	608	4,317
47.20	608	4,378
47.30	608	4,438
47.40	608	4,499
47.50	608	4,560
47.60	608	4,621
47.70	608	4,682
47.80	608	4,742
47.90	608	4,803
48.00	608	4,864
48.10	608	4,925
48.20	608	4,986
48.30	608	5,046
48.40	608	5,107
48.50	608	5,168
48.60	608	5,229
48.70	608	5,290
48.80	608	5,350
48.90	608	5,411
49.00	608	**5,472**

City of Poughkeepsie: Map Sheet 6062-59

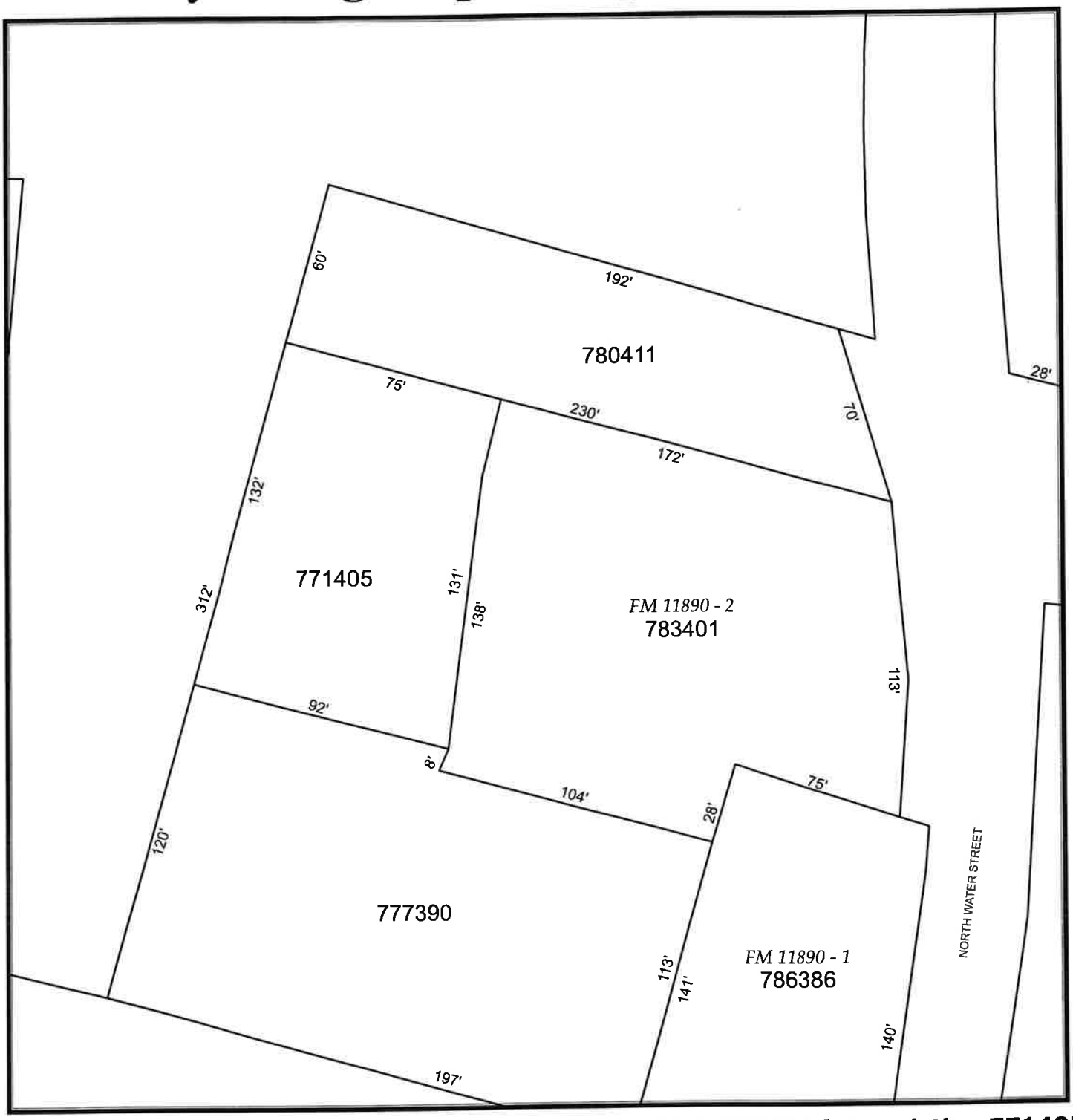

Explanation: Per Abandonment, I have merged 780411 & 783401 into existing 771405. Therefore:

1) Delete 780411

2) Delete 783401

3) 771405 is now 1.01 Ac(c)

Ian

BEFORE

Scale: N/A

Date: 08/21/2025

N

City of Poughkeepsie: Map Sheet 6062-59

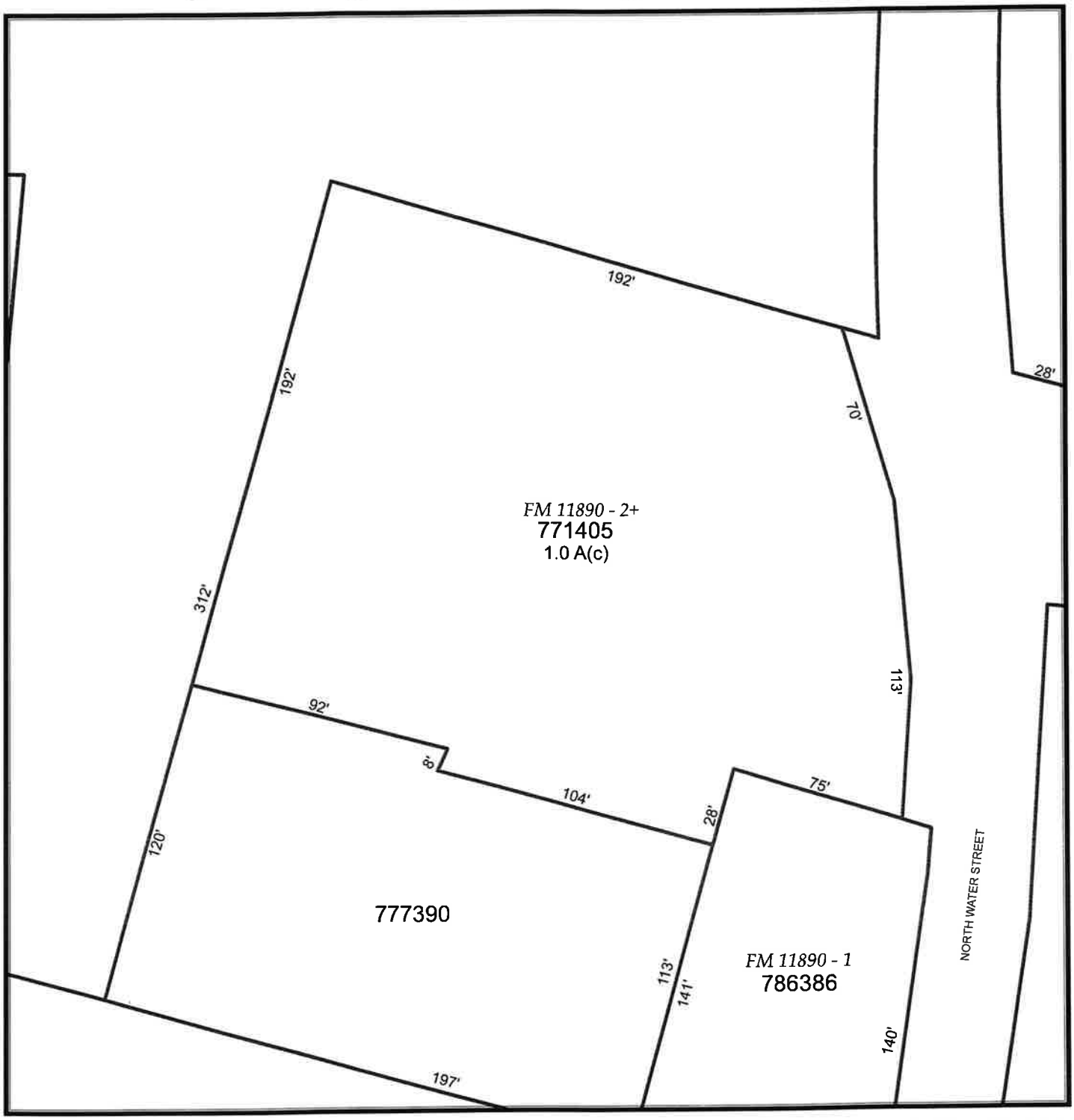

Explanation: Per Abandonment, I have merged 780411 & 783401 into existing 771405. Therefore:

1) Delete 780411

2) Delete 783401

3) 771405 is now 1.01 Ac(c)

Ian **AFTER**

Scale: N/A

Date: 08/21/2025

N

Parcel Information

Municipality: City of Poughkeepsie

Grid: 6062-59-780411-0000

Deleted: 8/21/2025

View in Parcel Access | View in Document Search | View Changes

Grid

Swis:	131300: City of Poughkeepsi
Parcel Grid:	6062-59-780411-0000
Prior Parcel Grid:	0000-00-000000-0000 Prior Parcel Could Not Be Found!
Split Parcels:	

Owners

Name 1:	141 NORTH WATER STREET
Name 2:	LLC
Name 3:	
Name 4:	

Deed References

Deed Book:	22021
Deed Page:	52659
Deed Recorded Date:	07/20/2021

Location

Location Number:	
Location Address:	N WATER ST
Easting:	607800
Northing:	624110
Split Town:	
School District:	131300: Poughkeepsie City S

Other

Life Estate:	N
Agricultural District:	
Status:	D
File Map Number:	
Lot Number:	
Lot Size:	0.29 AC (S)
Date Created:	08/09/2018

Comments

8/9/2018 DOC#22018-5628 (DEEDS SURPLUS PAPER ROAD) TO FORM THIS NEW PARCEL.
22018 5628 - SURVEY WITHIN DOCUMENT
22021 52658 - CORRECTION DEED FOR 22018 5628; NO RUPD AS CITY ALREADY CONVEYED TITLE

PER ABANDONMENT, MERGED INTO EXISTING 771405: 8/21/2025

Parcel Information

Municipality: City of Poughkeepsie

Grid: 6062-59-783401-0000

Deleted: 8/21/2025

View in Parcel Access | View in Document Search | View Changes

Grid

Swis:	131300: City of Poughkeepsi
Parcel Grid:	6062-59-783401-0000
Prior Parcel Grid:	6062-59-785397-0000
	View Prior Parcel
Split Parcels:	

Owners

Name 1:	141 NORTH WATER STREET
Name 2:	LLC
Name 3:	
Name 4:	

Deed References

Deed Book:	22020
Deed Page:	2724
Deed Recorded Date:	07/21/2020

Location

Location Number:	
Location Address:	N WATER ST
Easting:	607830
Northing:	624010
Split Town:	
School District:	131300: Poughkeepsie City S

Other

Life Estate:	N
Agricultural District:	
Status:	D
File Map Number:	11990
Lot Number:	2
Lot Size:	0.46 AC (C)
Date Created:	02/28/2006

Comments

22006/3024 UTILITY EASEMENT CONVEYED TO CITY OF POUGHKEEPSIE - 4/24/06
8/19/2009 PER DOC#22009-4000 AC REDUCED TO .46 AC(C)FOR HOFFMAN STREET BRIDGE PROJECT.

PER ABANDONMENT, MERGED INTO EXISTING 771405: 8/21/2025

Parcel Information

Parcel Updated Successfully!

Municipality: City of Poughkeepsie

Grid: 6062-59-771405-0000

View in Parcel Access | View in Document Search | View Changes

Grid

Swis:	131300: City of Poughkeepsi
Parcel Grid:	6062-59-771405-0000
Prior Parcel Grid:	0000-00-000000-0000 Prior Parcel Could Not Be Found!
Split Parcels:	

Owners

Name 1:	141 NORTH WATER STREET
Name 2:	LLC
Name 3:	
Name 4:	

Deed References

Deed Book:	22021
Deed Page:	52659
Deed Recorded Date:	07/20/2021

Location

Location Number:	141
Location Address:	N WATER ST
Easting:	607710
Northing:	624050
Split Town:	
School District:	131300: Poughkeepsie City S

Other

Life Estate:	N
Agricultural District:	
Status:	A
File Map Number:	11890
Lot Number:	2+
Lot Size:	1.01 AC (C)
Date Created:	

Comments

SEE ALSO 22020 2724 FOR REMAINING DESCRIPTION

PER ABANDONMENT, MERGED WITH 780411 & 783401, CHANGING ACREAGE FROM 0.262 (D) TO 1.01 (C): 8/21/2025

December 03, 2025

City of Poughkeepsie Planning Board
Attn: Anne Saylor, Chairperson
63 Civic Center Plaza
Poughkeepsie, NY 12601

cc: Lori Garcia, City of Poughkeepsie

RE: 2025-065 Architectural Review Comments – 141 North Water Street

MASS.

1 Chandler Street Suite 101
Boston, MA 02116

289 Main Street Suite 101
Poughkeepsie, NY 12601

hello@massdesigngroup.org
+1 857 233 5788
+1 845 473 4003

massdesigngroup.org

Dear Members of the Planning Board,

As described by the applicant, this project is for the construction of a 56-unit multi-family development with accessory parking to serve the residents on parcel 6062-59-771405 in the City of Poughkeepsie. This property had site plan approval for a 20-unit development in January of 2021 under separate ownership, and this application shows a significant departure from that previous design.

On November 18th, I joined a site and design review meeting for the proposed development at 141 North Water Street. The conversation included Architect Jason Anderson of ADG Architecture, Natalie Quinn and Jozlyn Young of KARC Consulting, Lori Garcia and Tyler Maegerle from the City's staff, and myself. I am pleased to offer the following observations to support the Board's continued review as the project advances.

Context, Massing, and Height
We spent time onsite understanding how the project sits within the challenging topography of Water Street. Standing at the proposed ground floor level—roughly aligned with the third floors of adjacent structures—the design team walked us through their building height studies, including view analyses from across the Hudson and from the Walkway. These visualizations were extremely helpful, and I want to acknowledge the care and rigor put into that work. Although the zoning for this segment of Water Street does not include the 40-foot height limit found elsewhere along the corridor, the applicant has nevertheless studied how the building profile steps, lowers, and aligns itself in ways that appear to reduce visual impact.

Property Line Conditions and Blank Facade
A substantial portion of the south elevation sits directly on the property line, precluding window openings without compromising volume and floor area. The design team anticipates that any neighboring development could legally construct adjacent to that wall, and has therefore treated it as a fire-rated condition. This raised the question of how to handle the resulting blank façade in a way that is contextual and visually intentional. We discussed options such as a removable metal screen or perforated metal artwork panel that could provide texture, pattern, or public art without compromising the integrity or warranties of the terracotta façade system. The possibility of tying that artistic

treatment to the industrial history of the waterfront or to local historical imagery was also raised as a potential narrative for the project.

Terracotta Façade System and Material Articulation
The use of terracotta panels throughout the project is a clear differentiator and signals a high-quality façade system. The team described how balcony "portals" push forward while bedroom bays recess, creating subtle but effective push-pull moments that help reduce the perceived massing. These are thoughtful moves that we believe will serve the building well, especially as seen obliquely from Water Street and from the Hudson river.

One minor suggestion raised during the walkthrough was the potential introduction of a small horizontal expression—*a reveal, crimp/fold projection, rail, or extruded line—running along the top of the decorative metal balustrades*. This would provide a hand-scale element, create visual continuity across the façade, and unify the varied volumes without adding cladding complexity.

One opportunity we noted in reviewing the design is to further strengthen the relationship between the larger windows and the punched-metal balustrades. This is especially relevant at the penthouse level, where the west-facing windows are the largest. We suggested one possible approach—introducing a frit pattern that echoes the guardrail motif to help mitigate sunset glare—but we welcome any alternative strategies the design team may propose.

Parking Screening, Nighttime Conditions, and Street Frontage
We reviewed the proposed design for the structured parking level, including the "slot" openings that allow ventilation while mitigating headlights shining to the street. The nighttime simulations, which modeled how the perforated metal screening softens interior lighting, were particularly helpful and represent the kind of study that supports a clear and transparent review process.

Historic and Waterfront Context
Members of the team noted that while the immediate surroundings are not designated historic fabric, the project benefits from acknowledging the historical relationship of Water Street to the Fall Kill, industrial brick structures, and the former Dutchess Whaling Company tenant house, and historic buildings in Upper Landing Park. Specifically, the terracotta palette provides an opportunity to subtly echo Poughkeepsie's older brick masonry buildings while still presenting a contemporary, waterfront-appropriate identity.

Views, Sightlines, and Neighboring Properties
The group discussed concerns raised at previous meetings regarding private views from Hoffman Street and nearby residences. Based on the applicant's view-shed analysis, the most affected vantage point appears limited and is governed largely by the massing of adjacent properties such as One Dutchess. The project's siting—set well back and angled relative to Hoffman—appears to minimize unintended impacts.

Material Samples and Documentation

MASS.

1 Chandler Street Suite 101
Boston, MA 02116

289 Main Street Suite 101
Poughkeepsie, NY 12601

hello@massdesigngroup.org
+1 857 233 5788
+1 845 473 4003

massdesigngroup.org

As discussed onsite, we recommend that the applicant provide physical samples of the terracotta and metal panels at the next Planning Board presentation, even though materials have been incorporated into the package (as printed or digital color accuracy has been proven to vary).

In closing, I want to highlight the professionalism of the applicant team and the quality of the studies already completed. This project presents an important opportunity to set a strong architectural contextfor new construction at the north end of Water Street. MASS is available to assist the Board with additional review or to help frame questions for the applicant as needed.

Sincerely,



Chris Kroner
Principal

THE CITY OF POUGHKEEPSIE

DEPARTMENT OF PUBLIC WORKS & ENGINEERING

Site Plan REVIEW
Form #1

1. Date: December 9, 2025

2. Name of Site Plan: Water Street Development

3. Address or Location: 141 North Water Street

4. Owner: Vassar College

5. Engineer/ Architect: 141 North Water Street, LLC

6. Yes ☐ No ☐ The SWPPP as forwarded by the Planning Department is acceptable and will be signed off on with no condition(s).

7. Yes ☐ No ☐ The SWPPP as forwarded by the Planning Department is acceptable and has been signed off on with no condition(s).

8. Yes ☒ No ☐ The applicant should be notified that the Dept. of Public Works/Engineering requires the following comment(s) be addressed:

ENGINEERING SWPPP REVIEW COMMENTS:

1. Verify water supply is sufficient for fire and domestic use. Flow data for the hydrant adjacent to the site is available from the Fire Department. Finalize engineer's report to include a discussion of flow data from adjacent hydrant.

Joseph A. Chenier, Jr.

Digitally signed by Joseph A. Chenier, Jr.
Date: 2025.12.09 10:02:10 -05'00'

Joseph A. Chenier, CPESC, CPMSM
Assistant Civil Engineer

Note: If #6 or #7 above are checked "yes" there is no need to go on to Form #2.

THE CITY OF POUGHKEEPSIE
ZONING BOARD OF APPEALS
141 NORTH WATER STREET
RESOLUTION
JANUARY 13, 2026

PO'K CITY CHAMBERLAIN
2026 JAN 15 PM12:30

In the matter of the appeal of 141 North Water Street LLC regarding the property at 141 North Water Street, Grid #6062-59-78340, 780411 and 771405, Poughkeepsie, New York:

At a Regular Meeting of the Zoning Board of Appeals held on the 13th day of January 2026, at 6:00pm:

PRESENT

Scott Parker, Chair
Jessica Vinall, Co-Chair
Sam Finnerman
Thomas Klug
James Patterson
Justin Phillips
Miles Shadman

WHEREAS, the Zoning Board of Appeals has received an application for area variances relative to the proposed construction of a 56-unit multifamily development on the property at 141 North Water Street, requesting variances of the following sections of the Zoning Code: Section 19-4.4(3)(e), which allows a maximum lot coverage of 50% to allow 65.39%; and, Section 19-6.5(5)(c) which allows a maximum fence of 3 feet in front yards to allow 4 feet; and, Section 19-6.8(1)(b) which requires that all bulkheads, elevator penthouses and similar structures be setback one foot from the edge of the roof for each additional foot in height greater than the specified height to allow such two such structures to be flush with the exterior wall on the east side of the building, a variance of approximately 17'9"; and,

WHEREAS, the application was submitted by Natalie Quinn of KARC Planning Consultants as agent for the owner, accompanied by a site plan prepared by Robert E. Morrison, Licensed Professional Engineer, with a revision date of September 30, 2025, and supplemental materials; and,

WHEREAS, a public hearing was held on the 13th day of January 2026; and,

WHEREAS, the project was classified as an unlisted action pursuant to the State Environmental Quality Review Act ("SEQRA"), receiving a negative declaration from the Planning Board on November 19, 2025; and,

WHEREAS, the Waterfront Advisory Committee completed a positive consistency review for the project against the criteria of the Local Waterfront Advisory Plan on November 11, 2025; and,

NOW THEREFORE BE IT RESOLVED THAT the City of Poughkeepsie Zoning Board of Appeals hereby finds that a consideration of the five factors for area variances weigh in favor of the applicant and grants variances of Section 19-4.4(3)(e); Section 19-6.5(5)(c); and Section 19-6.8(1)(b), as follows:

In making its determination on an area variance application, this Board must take into consideration the benefit to the applicant(s) if the variance is granted as weighed against the detriment to the health, safety and welfare of the neighborhood or community by such grant. The criteria the Board uses to make that determination are:

(1) whether an undesirable change will be produced in the character of the neighborhood or a detriment to nearby properties will be created by granting area variances;

The granting of the variances is unlikely to produce an undesirable change in the character of the neighborhood or be a detriment to nearby properties, as the development is consistent with other developments in the immediate area. Additionally, the Waterfront Advisory Commission provided a positive consistency review against the criteria of the Local Waterfront Revitalization Program (LWRP).

(2) whether the benefit sought by the applicant(s) can be achieved by some method, feasible for the applicant(s) to pursue, other than area variances:

While the benefit sought by the applicant might be achieved by other methods, the applicant makes persuasive arguments relating to safety and cost, although no detailed financial information is provided.

(3) whether the requested area variances are substantial:

On their face, the variances may seem substantial, particularly the lot coverage and elevator penthouse/stair tower height variances, however in practical terms they are not. The lot coverage is consistent with other projects in the area and, in fact, provides more open space than some.

With respect to the penthouse/tower, the height itself is not an issue: it is the setback of the structure from the edge of the roof. As the building is setback considerably from North Water Street, the appearance of the tower is already softened, and, further, it is integrated into the design in an aesthetically pleasing manner.

The variance for the height of the fence is reasonable to achieve its intended purpose, which is to ensure safety along the edge of the retaining wall adjacent to the outdoor tenant amenity area. The fact that a small section of this fence is technically, though not practically, located in the front wall does not negate the need for safety.

(4) whether the proposed variances will have an adverse effect or impact on the physical or environmental conditions in the neighborhood or district.

The granting of the variances is unlikely to have an adverse effect or impact on the physical or environmental conditions in the neighborhood or district. As the applicant points out, the project will likely decrease the potential for flooding and erosion, and run-off onto adjacent parcels, through the installation of a stormwater management system. Regarding the height of the fence, its placement and height is necessary for safety reasons.

(5) whether the alleged difficulty was self-created, which consideration shall be relevant to the decision of the Board but shall not necessarily preclude the granting of the area variance.

Any of the variances requested could be said to be self-created, in that a fully compliant project could be designed. That said, self-created hardships do not necessarily preclude the granting of area variances.

Motion: Scott Parker
Second: Thomas Klug
Carried: 7:0:0



Scott Parker, Chairman
Zoning Board of Appeals

January 13,2026
Date

Dutchess County Department of Planning and Development

Fax Info Only		
	To	Date #pgs
	Co./Dept.	From
	Fax #	Phone #

239 Planning/Zoning Referral - Exemption Communities

Please Fill in this section

Municipality: **City of Poughkeepsie**

Referring Agency: **Planning Board**

Tax Parcel Numbers(s): **7714050000**

Project Name: **141 N Water St**

Applicant: **141 North Water Street LLC**

Address of Property: **141 Water St, Poughkeepsie, NY 12601**

**Exempt Actions:*
239 Review is NOT Required**

- Administrative Amendments (fees, procedures, penalties, etc.)
- Special Permits for residential uses (accessory apts, home occupations, etc.)
- Use Variances for residential uses
- Area Variances for residential uses
- Renewals/Extension of Site Plans or Special Permits that have no changes from previous approvals

No Authority to review these Actions

- Subdivisions / Lot Line Adjustments
- Interpretations

☐ Exempt Action submitted for informal review

Actions Requiring 239 Review

- ☐ Comprehensive/Master Plans
- ☐ Zoning Amendments (standards, uses, definitions, district regulations, etc.)
- ☐ Other Local Laws associated with zoning (wetlands, historic preservation, affordable housing, architectural review, etc.)
- ☐ Rezonings involving all map changes
- ☐ Architectural Review
- ☑ Site Plans (all)
- ☐ Special Permits for all non-residential uses
- ☐ Use Variances for all non-residential uses
- ☐ Area Variances for all non-residential uses
- ☐ Other (Describe):

Parcels within 500 feet of:

- ☑ State Road:
- ☐ County Road:
- ☑ State Property (with recreation area or public building)
- ☐ County Property (with recreation area or public building)
- ☐ Municipal Boundary
- ☐ Farm operation in an Agricultural District

Date Response Requested:

Entered By: **Maegerle, Tyler**

These actions are only exempt in municipalities that signed an intermunicipal agreemment with Dutchess County to that effect.

For County Office Use Only

Response From Dutchess County Department of Planning and Development

No Comments:

- ☐ Matter of Local Concern
- ☐ No Jurisdiction
- ☐ No Authority
- ☐ Withdrawn
- ☐ Incomplete - municipality must resubmit to County
- ☐ Exempt from 239 Review
- ☐ None

Comments Attached:

- ☑ Local Concern with Comments
- ☐ Conditional
- ☐ Denial
- ☐ Incomplete with Comments- municipality must resubmit to County
- ☐ Informal Comments Only (Action Exempt from 239 Review)

Date Submitted: **10/10/2025**	Notes:	☑ Major Project
Date Received: **10/10/2025**		Referral #: **ZR25-295**
Date Requested:		
Date Required: **11/9/2025**	☐ Also mailed hard copy	Reviewer:
Date Transmitted: **11/7/2025**		

SUE SERINO
COUNTY EXECUTIVE

EOIN WRAFTER, AICP
COMMISSIONER

DUTCHESS COUNTY GOVERNMENT
DEPARTMENT OF PLANNING & DEVELOPMENT

November 7, 2025

To: Planning Board, City of Poughkeepsie
Re: ZR25-295, 141 N Water Street
Parcel: 771405

The Dutchess County Department of Planning and Development has reviewed the subject referral within the framework of General Municipal Law (Article 12B, §239-l/m).

ACTION
The applicant is seeking site plan approval for a new 56-unit residential building with associated parking and amenities.

COMMENTS
We are pleased to see needed housing proposed at this site. We offer the following minor comments:

- The south wall of the building (which faces the Walkway) is entirely blank. We understand that this is due to fire code requirements for a building built right up to the property line. It appears that only a few feet of separation is required for windows to be permitted. We suggest that the Board and applicant work together to reconfigure the building slightly to allow for windows. If such an adjustment is truly not possible, we suggest that the Board and applicant consider additional decorative elements to increase the visual interest of this façade.

- The selected light fixtures for the bollards emit significant uplight. The board could request that the applicant choose a different bollard light. The fixture marked as "Ex" also produces uplight; it is not clear whether these are already in place or whether they are new fixtures intended to replicate nearby existing ones. In either case, as long as they are on the applicant's property the board could request that they be replaced with a similar Dark Sky-approved option.

RECOMMENDATION
The Department recommends that the Board rely upon its own study of the facts in the case with due consideration of the above comments.

Eoin Wrafter, AICP
Commissioner
By



Dylan Tuttle, Senior Planner

THE CITY OF POUGHKEEPSIE
FIRE DEPARTMENT

505 MAIN STREET
POUGHKEEPSIE, NY 12601
TEL: 845-451-4079 FAX: 845-451-4191
FIRE CHIEF JOSEPH FRANCO
JFRANCO@CITYOFPOUGHKEEPSIE.COM

SITE PLAN REVIEW FORM

TO: Planning Board

FROM: Acting Fire Chief Vincent Parise

DATE: December 20, 2025

ADDRESS: 141 North Water St

__X___ The site plan is acceptable and will be signed.

____ The site plan is acceptable and will be signed with the following conditions:

1. Need a Fire Escape Report
2. Window to fire escape needs to meet requirements

Vincent Parise
Vincent Parise, Acting Fire Chief

12/20/2025
Date

420 Lexington Avenue
New York, NY 10170
www.mta.info

Justin R. Vonashek
President

Metro-North Railroad

VIA EMAIL (lgarcia@cityofpoughkeepsie.com)

December 9, 2025

Ms. Lori Garcia
Board Administrative Assistant
CITY OF POUGHKEEPSIE DEVELOPMENT DEPARTMENT
62 Civic Center Plaza
Poughkeepsie, NY 12601

RE: SEQRA Lead Agency Determination Notice and EAF Part 1-141 North Water Street, Poughkeepsie, NY

Dear Ms. Garcia:

Metro-North Commuter Railroad Company ("Metro-North") is in receipt of the SEQRA Lead Agency Determination Notice for 141 North Water Street in Poughkeepsie, NY. This proposal is for the construction of a 56-unit multi-family development with accessory parking to serve the residents. Site Plan approval was previously granted for this site for a 20-unit development. This proposal is located adjacent to properties owned by Metro-North. Metro-North does not object to the City of Poughkeepsie being lead agency for the SEQRA review.

The planned 56-unit multi-family development and its accessory parking (an extension of the existing One Hudson Development) are proximate to Metro-North's Poughkeepsie Station on the Hudson Line. In addition, Metro-North's Poughkeepsie Yard and 200 North Water Street employee facilities are just north of the planned development, separated by both North Water Street, which is the access to these facilities, as well as the existing phases of the One Dutchess development.

As adjacent landowner, we look forward to continuing to review the SEQRA documentation and future designs being prepared by proposers for the 141 North Water Street site and the City of Poughkeepsie.

Please consider these comments:

- Kindly identify/ include details and locations/sitings of fuel and/or battery energy storage system for backup generators (if any) on site.
- Plans that show location, size, construction and character of the means of egress along the ROW (if any) must be provided for Metro-North's review and approval.
- The applicant should be made aware that due to the proximity of the site to Metro-North's right-of-way, entry permits from Metro-North may required for construction. Additionally, the construction means and methods as well as storm water management plans and calculations, drainage, soil erosion and sediment control plans, site preparation and other plans must be reviewed and approved by Metro-North. Should excavation and/or blasting be required, Metro-North's specifications must be used. Entry permit and insurance requirements can be obtained by contacting Christopher Norris, Director, Individuals & Corporations at CNorris@mnr.org.

- Question 8 b (page 2 of 3) - In response to question: "Are public transportation services available at or near the site of the proposed action?" applicant responded “no” but site is within half mile/10-minute walk of Metro-North’s Poughkeepsie station, accessible via Water St.
- Question 8 c (page 2 of 3)- In response to question: "Are any pedestrian accommodations or bicycle routes available on or near the site of the proposed action?" applicant responded “no” but site is immediately adjacent to public sidewalk, walking bike paths along the waterfront, and the Walkway over the Hudson.
- The proposer should consider integration of amenities and site design in order to take advantage of proximity to Metro-North station and nearby recreational amenities.
- Question 12- the applicant answered “yes” to the question regarding if the site is substantially contiguous to a building, archeological site or district which is listed on the National or State Register of Historic Places or that has been determined by the Commissioner of the NYS Office of Parks, Recreation and Historic Preservations to be eligible for listing on the State Register of Historic Places, but does not indicate which it is.
- Question 17 (page 3 of 3) indicates that stormwater will be managed on site per a drainage report. Metro-North requests a copy of such be sent to Kevin Kenny P.E., Sr. Engineer-Hydrology at kkenny@mnr.org.

Should you have any questions, or if you require any further information, please do not hesitate to contact me at 646-671-2907. Thank you for your consideration of these comments and we look forward to continuing to work together.

Sincerely,

Robyn M. Hollander, AICP
Director, Capital Strategy and Program Delivery

Cc:	E. Foley	L. Oliva	A. Buder	J. Urda	M. Penders	K. Kenny
	M.Kavalar	J. Richardson	E. Van derLinde	A. Paolo	J. Harrington	C. Norris.
	M. Loney	M. Harris	S. Gianazza	J. Barry	L. Carter	

City of Poughkeepsie
Waterfront Advisory Committee
Local Waterfront Revitalization Program[1]
Waterfront Consistency Review

RE: 141 N Water Street

A Waterfront Consistency Review completed for this project at the 11/5/2025 WAC meeting, to review the consistency of the application against the Section III policies of the Local Waterfront Revitalization Plan (LWRP).

General comments discussed at the meeting are as follows:

- The applicant submitted a comprehensive package which included a Natural Resources Inventory Conservation Analysis and renderings from several viewpoints which supported WAC's consistency review
- The project is generally aligned with the policies of the LWRP. The Committee was very impressed by the high level of detail in the presentation and the thoughtfulness of this project's planning.

[1] November 22, 2022 LWRP available on the City of Poughkeepsie LWRP webpage at: https://www.cityofpoughkeepsie.com/392/Project-Documents

SECTION III LOCAL WATERFRONT REVITALIZATION PROGRAM POLICIES

DEVELOPMENT POLICIES
Policy 1: Restore, revitalize, and redevelop deteriorated and underutilized waterfront areas for commercial, industrial, cultural, recreational, and other compatible uses.
Policy 2: Facilitate the siting of water dependent uses and facilities on or adjacent to coastal waters.
Policy 3: Not applicable to the City of Poughkeepsie.
Policy 4: Strengthen the economic base of smaller harbor areas by encouraging the development and enhancement of those traditional uses and activities which have provided such areas with their unique maritime identity.
Policy 5: Encourage the location of development in areas where public services and facilities essential to such development are adequate. *Consistent*
Policy 6: Expedite permit procedures in order to facilitate the siting of development activities at suitable locations.
FISH AND WILDLIFE POLICIES
Policy 7: Significant coastal fish and wildlife habitats will be protected, preserved, and where practical, restored so as to maintain their viability as habitats.
Policy 8: Protect fish and wildlife resources in the coastal area from the introduction of hazardous wastes and other pollutants which bio-accumulate in the food chain or which cause significant sublethal or lethal effect on those resources.
Policy 9: Expand recreational use of fish and wildlife resources in coastal areas by increasing access to existing resources, supplementing existing stocks, and developing new resources.
Policy 10: Further develop commercial finfish, shellfish, and crustacean resources in the coastal area by encouraging the construction of new, or improvement of existing on-shore commercial fishing facilities, increasing marketing of the State's seafood products, maintaining adequate stocks, and expanding aquaculture facilities.
FLOODING AND EROSION POLICIES
Policy 11: Buildings and other structures will be sited in the coastal area so as to minimize damage to property and the endangering of human lives caused by flooding and erosion.
Policy 12: Activities or development in the coastal area will be undertaken so as to minimize damage to natural resources and property from flooding and erosion by protecting natural protective features including beaches, dunes, barrier islands and bluffs.
Policy 13: The construction or reconstruction of erosion protection structures shall be undertaken only if they have a reasonable probability of controlling erosion for at least thirty years as demonstrated in design and construction standards and/or assured maintenance or replacement programs.
Policy 14: Activities and development, including the construction or reconstruction of erosion protection structures, shall be undertaken so that there will be no measurable increase in erosion or flooding at the site of such activities or development, or at other locations.
Policy 15: Mining, excavation or dredging in coastal waters shall not significantly interfere with the natural coastal processes which supply beach materials to land adjacent to such waters and shall be undertaken in a manner which will not cause an increase in erosion of such land.
Policy 16: Public funds shall only be used for erosion protective structures where necessary to protect human life, and new development which requires a location within or adjacent to an erosion hazard area to be able to function, or existing development; and only where the public benefits outweigh the long term monetary and other costs including the potential for

increasing erosion and adverse effects on natural protective features.

Policy 17 Non-structural measures to minimize damage to natural resources and property from flooding and erosion shall be used whenever possible.

GENERAL POLICY

Policy 18: To safeguard the vital economic, social and environmental interests of the State and of its citizens, proposed major actions in the coastal area must give full consideration to those interests, and to the safeguards which the State has established to protect valuable coastal resource areas.

PUBLIC ACCESS POLICIES

Policy 19: Protect, maintain, and increase the level and types of access to public water related recreation resources and facilities.

Policy 20: Access to the publicly-owned foreshore and to lands immediately adjacent to the foreshore or the water's edge that are publicly-owned shall be provided and it shall be provided in a manner compatible with adjoining uses.

RECREATION POLICIES

Policy 21: Water dependent and water enhanced recreation will be encouraged and facilitated, and will be given priority over non-water-related uses along the coast.

Policy 22: Development when located adjacent to the shore will provide for water-related recreation whenever such use is compatible with reasonably anticipated demand for such activities, and is compatible with the primary purpose of the development.

Consistent.

HISTORIC AND SCENIC RESOURCES POLICIES

Policy 23: Protect, enhance and restore structures, districts, areas or sites that are of significance in the history, architecture, archaeology or culture of the State, its communities, or the Nation.

Policy 24: Prevent impairment of scenic resources of statewide significance.

Policy 25: Protect, restore or enhance natural and man-made resources which are not identified as being of statewide significance, but which contribute to the overall scenic quality of the coastal area.

Consistent.

AGRICULTURAL LANDS POLICY

Policy 26: Conserve and protect agricultural lands in the State’s coastal area.

ENERGY AND ICE MANAGEMENT POLICIES

Policy 27: Decisions on the siting and construction of major energy facilities in the coastal area will be based on public energy needs, compatibility of such facilities with the environment, and the facility's need for a shorefront location.

Policy 28: Ice management practices shall not interfere with the production of hydroelectric power, damage significant fish and wildlife and their habitats, or increase shoreline erosion or flooding.

Policy 29: The development of offshore uses and resources, including renewable energy resources, shall accommodate New York's long-standing ocean and Great Lakes industries, such as commercial and recreational fishing and maritime commerce, and the ecological functions of habitats important to New York.

WATER AND AIR RESOURCES POLICIES

Policy 30: Municipal, industrial, and commercial discharge of pollutants, including but not limited to, toxic and hazardous substances, into coastal waters will conform to State and National water quality standards.

Policy 31: State coastal area policies and management objectives of approved Local Waterfront Revitalization Programs will be considered while reviewing coastal water classifications and while modifying water quality standards; however, those waters already overburdened with contaminants will be recognized as being a development constraint.

Policy 32: Not applicable to the City of Poughkeepsie.

Policy 33: Best management practices will be used to ensure the control of stormwater runoff and combined sewer overflows draining into coastal waters.

Consistent

Policy 34: Discharge of waste materials into coastal waters from vessels subject to State jurisdiction will be limited so as to protect significant fish and wildlife habitats, recreational areas and water supply areas.

Policy 35: Dredging and filling in coastal waters and disposal of dredged material will be undertaken in a manner that meets existing State dredging permit requirements, and protects significant fish and wildlife habitats, scenic resources, natural protective features, important agricultural lands, and wetlands.

Policy 36: Activities related to the shipment and storage of petroleum and other hazardous materials will be conducted in a manner that will prevent or at least minimize spills into coastal waters; all practicable efforts will be undertaken to expedite the cleanup of such discharges; and restitution for damages will be required when these spills occur.

Policy 37: Best management practices will be utilized to minimize the non-point discharge of excess nutrients, organics and eroded soils into coastal waters.

Policy 38: The quality and quantity of surface water and groundwater supplies, will be conserved and protected, particularly where such waters constitute the primary or sole source of water supply.

Policy 39: The transport, storage, treatment and disposal of solid wastes, particularly hazardous wastes, within coastal areas will be conducted in such a manner so as to protect groundwater and surface water supplies, significant fish and wildlife habitats, recreation areas, important agricultural land, and scenic resources.

Policy 40: Effluent discharged from major steam electric generating and industrial facilities into coastal waters will not be unduly injurious to fish and wildlife and shall conform to state water quality standards.

Policy 41: Land use or development in the coastal area will not cause national or State air quality standards to be violated.

Policy 42: Coastal management policies will be considered if the State reclassifies land areas pursuant to the prevention of significant deterioration regulations of the Federal Clean Air Act.
Policy 43: Land use or development in the coastal area must not cause the generation of significant amounts of acid rain precursors: nitrates and sulfates.
WETLANDS POLICY
Policy 44: Preserve and protect tidal and freshwater wetlands and preserve the benefits derived from these areas

THE CITY OF POUGHKEEPSIE

PLANNING BOARD
62 CIVIC CENTER PLAZA, 2ND FLOOR
POUGHKEEPSIE, NY 12601
141 NORTH WATER STREET
JANUARY 27, 2025
DRAFT RESOLUTION

WHEREAS, the Planning Board has received an application from 141 North Water Street LLC for the proposed construction of a fifty-six (56) unit residential building with accessory structured parking, File #PB2025-065; and,

WHEREAS, this application has been classified as an Unlisted Action for the purposes of SEQRA; and,

WHEREAS, the action is more fully detailed on a site plan and elevations prepared by Rodney E Morrison PE, dated 12/12/25, and supplemental documentation; and,

WHEREAS, January 13, 2026, the Zoning Board of Appeals granted variances regarding lot coverage, fence height and the setback of the elevator penthouse from the edge of the roof; and,

WHEREAS, at the November 19th, 2025 meeting the Planning Board as reviewing agency of the SEQRA review adopted a Negative Declaration in accordance with Article 8 of the Environmental Conservation Law and 6 NYCRR 617 and City Code 19-6.4 and 19-4.17; and,

Whereas, at the January 27th 2026 meeting the Planning Board as reviewing agency of the SEQRA review, in light of the discovery of new information, amended the Negative Declaration in accordance with Article 8 of the Environmental Conservation Law and 6 NYCRR 617 and City Code 19-6.4 and 19-4.17; and,

WHEREAS, upon completion of the project, prior to the issuance of the final certificate of occupancy, an as-built site plan set shall be submitted to the Planning Department for certification of compliance with Planning Board approval; and,

NOW THEREFORE BE IT RESOLVED that the Board grant site plan approval relative to the proposed construction of a fifty-six (56) unit residential building with accessory structured parking, with the following conditions:

- Outstanding Engineering comments in the 12/9/25 letter be addressed
- All City Departments' comments be addressed to those departments' satisfaction

Motion:
Second:
Carried:

_____
Anne Saylor
Planning Board Chair

_____
Date

APPLICATION TO THE PLANNING BOARD
CITY OF POUGHKEEPSIE, NEW YORK

RECEIVED
AUG 12 2024
By

Application for Site Plan, Special Permit & Facade Approval

PB2024-006

OFFICE USE ONLY
CODE: PLSF
ID #_____
FEE: _____
Total, from:
$500, plus
$_____
($150 per 1000 square feet of floor area), plus
$_____
($35 per number of required parking spaces), plus
$_____
($500 for special permit, if applicable)

I. **PROPERTY ADDRESS:** 654 Main Street

II. **PROPERTY OWNER:** EFDS Realty Corp
ADDRESS: PO Box 868
Newburgh
NY, 12551 (state and zip code)
PHONE NUMBER: (646) 358-9089 (include area code)

III. **NAME OF APPLICANT:** Jay Diesing, RA AIA - Mauri Architects PC
ADDRESS: 73 Mansion Street
Poughkeepsie
NY, 12601 (state and zip code)
PHONE NUMBER: (845) 452-1030 (include area code)
EMAIL ADDRESS: _____

PAID
JAN 31 2024

(If applicant is NOT the owner, proof of owner's consent to the application MUST be provided.)

IV. **CONSULTANT:** Mauri Architects PC
ADDRESS: 73 Mansion Street
Poughkeepsie
NY 12601 (state and zip code)
PHONE NUMBER: (845) 452-1030 (include area code)

V. **PROPOSED USE or FAÇADE CHANGE** (Summarize proposed use or uses):
New Apartment and Mixed-Use (Commercial / Multi-Family) Buildings

VI. **ZONING DISTRICT:** C-2A, R-4

(Proceed to XVII for special permit & façade approval only)

PROJECT INFORMATION

New construction: _____X_____(yes)_____ (no)

Change of use:_____ (yes) _____X_____ (no)

Expansion/addition:_____ (yes) _____X_____ (no)

Alteration:_____ (yes) _____X_____ (no)

Cost of Construction: $ 4,700,000.00 (Estimated)

LOT AND BULK INFORMATION:

Lot area: 2.92 +/- (acres) 127,410 +/- (square feet)
(Total of all combined lots)

Building Footprint: 10,486 (proposed square feet for new construction)
(Total of two proposed buildings)
N/A (existing square feet for change of use/expansion)

N/A (additional proposed square feet for expansion)

10,486 (total building footprint, square feet)
(Total of two proposed buildings)

Lot Coverage: See Site Plans (percentage, building coverage only)

Gross Floor Area: 24,402 (proposed square feet for new construction)
(Total of two proposed buildings)
N/A (existing square feet for change of use/expansion)

N/A (additional proposed square feet for expansion)

24,402 (total gross floor area, square feet)
(Total of two proposed buildings)

Building Height: 3 (Mixed use-Main St) 2 (Apartment-Reynolds Ave) (stories) 40'-0" +/- 30'-0" +/- (feet)

Floor Area Ratio: See Site Plans (ratio of gross floor area divided by lot area)

VIII. PROJECT PARKING INFORMATION

A) Number of Off-Street Parking Spaces required: 45
(Total of two proposed lots)

B) Number of Off-Street Parking Spaces provided: 54
(Total of two proposed lots)

C) Waiver Requested: _____ (Yes) _____X_____ (No)

Is municipal parking available within 600 feet? _____ (Yes) _____X_____ (No)

If yes, name all such municipal facilities: N/A

(If a waiver is requested based on proximity to municipal facilities, a written request for such waiver, addressed to the City Planning Staff and the Chairman of the Planning Board, must be submitted with the application.)

If a private parking facility is to be utilized, is such facility within 600 feet?

_____ (Yes) __X___ (No)

If yes, provide the address of the facility, name of the property owner, number of spaces in the lot, number of spaces available for lease, and length of lease. Attach copy of lease. Additional information may be required by the Planning Board): N/A

IX. RESIDENTIAL PROPOSALS

A) Type of Development: Apartments
(Townhouse, condominium, multiple residence rental, etc.)

B) Unit Breakdown:

Number of efficiency or "studio" units: 8
(Total of two proposed buildings)

Number of one (1) bedroom units: 15
(Total of two proposed buildings)

Number of two (2) bedroom unit's 2
(Total of two proposed buildings)

Number with three or more bedrooms: N/A

Total number of units: 25
(Total of two proposed buildings)

C) Is funding public? ____ Yes __X__ No
If yes, describe funding source: _____

X. OFFICE PROPOSALS (____ Medical/Dental ____ Professional ____ Business) - N/A

A) Number of Employees: _____
B) Number of doctors/dentists/medical practitioners: _____
C) Days/Hours of Operation: _____

XI. SERVICE BUSINESS PROPOSALS - N/A

A) Specify Business: _____
(e.g., laundromat, drycleaner, beauty parlor, travel agency, banks)

B) Number of Employees: _____

C) Number of Washing Machines (for laundromat): _____

D) Days/Hours of Operation: _____

XII. MERCANTILE PROPOSALS (Retail __X___ Wholesale _____)

A) Type of Mercantile (specify): TBD

B) Number of Employees: TBD

C) Days/Hours of Operation: TBD

XIII. STANDARD RESTAURANT/FAST FOOD RESTAURANT/COFFEE SHOP/DONUT SHOP/NIGHTCLUB/DISCOTHEQUE/BAR PROPOSALS - N/A

A) Specify Use: _____

B) Number of seats (excluding bar stools and outdoor seating):_____

C) Meals served (i.e., breakfast, lunch, dinner): _____

D) Type of Menu: _____

E) Days/Hours of Operation: _____

F) Entertainment (live and/or recorded):_____

G) Will the restaurant contain a bar/lounge?: _____ Yes _____ No

H) If yes, how many seats at the bar? _____

I) Is a drive-through window proposed? _____

J) Is a walk-up window proposed? _____

K) Is an outdoor seating area proposed? _____

L) If yes, how many seats are proposed? _____

M) If yes, is outdoor cooking proposed? _____

XIV. INDUSTRIAL/COMMERCIAL PROPOSALS (Automobile repair, taxi, motor vehicle sales, warehouse, manufacturing, animal hospital, research facilities, etc.) - N/A

A) Specify Use: _____

B) Number of shifts (if any): _____

C) Number of employees: _____
(If shifts are proposed, list number of employees per shift)

E) Number of work bays (if automobile repair): _____

F) Days/Hours of operation: _____

XV. EDUCATIONAL/INSTITUTIONAL/RECREATIONAL PROPOSALS (e.g., Museums, Theatres, Conference Centers, Hotels, Motels, Hospitals, Nursing Homes, Assisted Living Facilities, Nursery Schools, Private Schools, Day Care Centers, Places of Worship, Marinas, Membership Clubs, etc.) - N/A

A) Specify: _____

B) Number of shifts (if any): _____

C) Number of employees: _____
(If shifts are proposed, list number of employees per shift)

D) Number of beds (hospitals, nursing homes, etc): _____

E) Number of seats in largest assembly space: _____

F) Number of classrooms (schools): _____

G) Number of rental units (hotels, motels, etc.) _____

H) Number of boat slips/courts (e.g., tennis, handball, etc.), alleys: _____

I) Days/Hours of Operation: _____

XVI. PROPOSALS NOT MENTIONED ABOVE (Please be specific): - N/A

_____

_____

_____

_____

_____

XVII. APPLICANT CERTIFICATION

I, Jay Diesing, RA AIA, certify that the this application has addressed the objectives outlined in the Zoning Ordinance with consideration given to the public health, safety and welfare; the comfort and convenience of the public in general or the residents or users of the proposed development and of the immediate neighborhood.

The applicant certifies that all information contained herein is accurate and complete as of the date of this application.

_____ 9 Aug 24

Signature of Applicant Date

MARTIN J DIESING AIA
RICHARD K TOMPKINS AIA

December 3, 2025

Ms. Anne Saylor, Chair
City of Poughkeepsie Planning Board
62 Civic Center Plaza
Poughkeepsie, NY 12601

RE: Proposed Lot Line Adjustments & Commercial / Multi-Family Development at:
654 Main Street, Poughkeepsie, NY 12601
Parcel #6161-33-543870

Dear Chairperson Saylor and Planning Board Members,

Enclosed for your review are updated plans and related documents regarding the above referenced project. Since our last meeting, the project has received Zoning Variances from the City Zoning Board of Appeals for relief of Parking requirements and Interior Lot Line Landscaping. In addition, we had a productive on-site meeting with MASS Design Group, Planning Board Architectural Consultant, to discuss the aesthetic features of the project.

Our office is in receipt of comment letters from various City Departments regarding the project. Following is an outline of those comments along with detailed responses to each:

City Engineering Department Comment Letter dated May 9, 2024:

1. Verify proposed water and sewer services are sufficient for the proposed development. Provide documentation from design professional to verify. Include discussion of fire flow.

   Response: The proposed services are sufficient, refer to attached letter from CBK Engineering, dated December 2, 2025.

2. Verify existing water utility is acceptable for proposed development. Flow data is available from the fire department. Provide documentation from a design professional to confirm. Include a discussion of domestic and fire flows.

   Response: The existing water utility service is sufficient for the required fire flow, refer to attached letter from CBK Engineering, dated December 2, 2025.

3. Verify water service for the former Pickwick Pub has been abandoned at the main.

   Response: Notations to verify the proper abandonment of the former water service, in accordance with City of Poughkeepsie standards, have been added to the Civil Plans, refer to Sheet CP-2.

4. Provide monumentation of property corners along City ROW.

   Response: Notations to provide the requested monumentation have been added to the Civil Plans, refer to Sheet CP-1.

5. Provide invert elevations for storm and sanitary sewer structures and pipe diameters on Main Street and Reynolds Road.

   Response: The requested invert elevations and pipe diameters have been added to the Civil Plans, refer to Sheets CP-1 and CP-2. Inverts are per City of Poughkeepsie Storm Drainage Improvements As-Built Drawings as prepared by Blasland, Bouke and Lee, Inc. dated 1999. Elevations have been adjusted to NAVD88 per Rite Aid Pharmacy Plan prepared by Chazen Companies, last revised January 9, 1996, as well as survey prepared by Hillriegel Land Surveying, last revised November 17, 2025.

6. Show roof leaders on site plan and discharge locations.

   Response: Roof leaders and discharge locations are shown on the Civil Plans, refer to Sheet CP-1.

7. Show water main pipe diameters on Main Street and Reynolds Road.

   Response: Water main pipe diameters have been added to the Civil Plans, refer to Sheets CP-1 and CP-2.

8. Show fire hydrant at 699 Main Street on site plan.

   Response: A Proposed Fire Aerial Access Plan has been added to the drawing set, the nearest hydrants and their associated identification numbers are indicated on this plan, refer to Sheet PB-5.

9. New sanitary sewer service connections are shown to manholes. This is not typically permitted. Connections should be made to the main with a wye connection or tapping saddle.

   Response: Sanitary service connections are now shown directly to the main with wye connection, refer to Sheet CP-1 and Sanitary Sewer Lateral Service Connection Detail 17 on Sheet CP-3.

10. Replace the damaged sidewalk at Main Street adjacent to the former Pickwick Pub (698 Main Street).

    Response: Notations to remove and replace this portion of sidewalk (asphalt patched section) and adjacent portions as required for new building services have been added to the drawing set, refer to the Civil Plans and Sheet PB-2.

11. Formally abandon curb cuts at former Pickwick Pub and on Reynolds Avenue. They should be replaced with full reveal curb and appropriately graded sidewalk at Main Street and topsoil/seed at Reynolds Avenue.

    Response: Notations to remove the two abandoned curb cuts and construct new concrete walks, curbing and seeded lawn areas have been added to the drawing set, refer to the Civil Plans and Sheets PB-2 and PB-3.

12. Verify water service to Pickwick Pub was abandoned at the main per the detail on CP-3.

    Response: Notations to verify the proper abandonment of the former water service, in accordance with City of Poughkeepsie standards, have been added to the Civil Plans, refer to Sheet CP-2.

13. Show existing parking lot drainage complete to discharge location. Verify drainage discharges to storm sewer. The parking lot catch basin shown southeast of the grocery store appears to be filled with concrete. Please verify and revise the site plan accordingly.

    Response: The referenced existing catch basins are to be abandoned. Notations for the existing catch basins to be removed, or broken and filled with clean fill, and paved over have been added to the Civil Plans, refer to Sheet CP-2.

14. If existing site drainage is found to cross proposed property lines a utility agreement will be needed.

    Response: Comment noted. All properties are held by the same Owner, and they will have their legal team prepare and file the required stormwater easements. We kindly request that this be a condition of approval.

15. Post development stormwater runoff rates shall not exceed predevelopment. Provide brief stormwater report to validate. Green infrastructure and pretreatment are encouraged. Hoods at catch basins to prevent floatables from discharging to the City MS4 are required at a minimum.

    Response: The proposed plan reduces impervious surfaces from existing conditions by 4,700 SF and converts them into green space. This reduction in impervious surface will provide additional area for surface water infiltration which both treats stormwater and reduces post-development stormwater runoff rates. Hoods have been added to the Civil Plans for all new catch basin outlet pipes refer to Proposed Catch Basin Hood Detail 3 on Sheet CP-2.

16. Indicate pavement edges for utility connections are to be sawcut.

    Response: Notations identifying the saw-cut requirement have been added to the drawing set, refer to the Civil Plans and Partial Site Plan – Removals on Sheet PB-2.

17. The parking lot crosses property boundaries and there appears to be no physical delineation. Is an agreement or easement in place for shared lots. Has an access agreement been granted for the parking spaces adjacent to the proposed 3 story mixed-use building.

    Response: Comment noted. All properties are held by the same Owner, and they will have their legal team prepare and file the required access easements and shared parking agreements. We kindly request that this be a condition of approval.

City Fire Department Comments received via email on May 24, 2024:

- 698 Main St.-Commercial first floor with 7 dwelling units:

1. Fire Department Connection on main street side of building fronting Main street.

   Response: The requested connection has been identified on the Proposed Fire Aerial Access Plan, refer to Sheet PB-5.

2. Knox Box, location at later date

   Response: Comment noted. A notation identifying this requirement has been added to the Proposed Fire Aerial Access Plan, refer to Sheet PB-5.

- 28 Dwelling Unit Fronting Reynolds-

3. What will the address be? Main or Reynolds?

   Response: The building will be addressed on Reynolds Avenue. 911 addressing is pending the lot line adjustment and will be required to identify the final street number (plans currently show 26 Reynolds Avenue).

4. Fire Department Connection on Main Street side of proposed building, corner closest to Market Fresh.

   Response: The requested connection has been identified on the Proposed Fire Aerial Access Plan, refer to Sheet PB-5.

5. Knox Box location at later date

   Response: Comment noted. A notation identifying this requirement has been added to the Proposed Fire Aerial Access Plan, refer to Sheet PB-5.

6. Show on plan- that Ladder truck can make swing entering from Main St. heading towards Reynolds Ave between mountable rolled curb of building and mountable rolled curb adjacent to building curb (Picture attached for reference)

   Response: A Proposed Fire Aerial Access Plan has been added to the drawing set depicting the vehicle access paths of the vehicle body, front and rear tires, refer to Sheet PB-5. The City of Poughkeepsie 2018 Spartan / Smeal 100' Ladder was not available on our modeling software, therefore a larger vehicle (105' Ladder 'Pierce Quantum') was used to simulate the access paths. Mountable (traversable) curbs have been provided at the identified location, refer to the Civil Plans Sheet CP-1 and Traversable Curb Detail 2 on Sheet CP-2.

MASS Design Group Architectural Review Comments dated June 9, 2025:

- GENERAL COMMENTS:

1. General Drawing Comment

   Response: As noted, the shadow aligns with the upper window line. The intent is that these windows match the remainder of the storefront, no window treatment is proposed. The requested 'key elevations' has been added, refer to Project West Elevation on Sheet PB-6. The requested rendered elevations and perspective views are being prepared and will be presented to the Board at a subsequent meeting.

2. Materials

   Response: The requested material sample board is being prepared and will be presented to the Board at a subsequent meeting.

- SITE PLAN AND LANDSCAPE

3. Street Trees

   Response: The landscaping plan has been significantly revised and expanded, incorporating some of the suggested revisions and additions, refer to Sheets PB-3 and PB-3.1. Callery Pear trees have been omitted as suggested. Serviceberry, Musclewood and Forest Pansy Redbud are now proposed.

4. Street Fencing

   Response: The fencing directly in front of the Reynolds Avenue apartment building has been removed as suggested. Improvements and extensions to the existing Japanese Yew hedge are now proposed, refer to Sheets PB-2 and PB-3.

5. Common Yards

   Response: A paver patio area has been added to the open space between the two buildings, the paver patio will include outdoor grills for resident use. The landscaping plan has been expanded to include shade trees and the suggested privacy hedge to formalize the residents' lawn area, refer to Sheets PB-2 and PB-3.

6. PVC Fencing

   Response: PVC fencing has been omitted as suggested, the proposed fencing has been revised to aluminum picket fencing to match the existing fencing along the southern and eastern property lines, refer to Detail 2 on Sheet PB-2.

7. Lighting

   Response: Lighting fixture cut-sheets have been added to the drawing set, refer to Sheet PB-4.1.

8. Parking Lot Lighting

   Response: New lighting is now proposed for all three sites; existing lighting is to be replaced with all new LED lighting. All new pole mounted lights are proposed within the parking areas, and the new lights are smaller and mounted lower to better fit with the proposed buildings' scale, refer to Sheet PB-4.

- MASSING

9. Porches

   Response: As noted, the roof cover is intentionally designed to assist in wayfinding and signify building entrances. In lieu of expanding the roof covering along the east and west facades new windows have been added to break up the solid expanse of wall.

10. Metal Panel Seaming at Volumetric Widows

    Response: The panel cladding is fiber cement, and is intended to create an alignment with the modern aesthetic of the Main Street mixed-use building. It is purposeful that the materials, colors and architectural styles vary across the Renyolds Avenue facade to simulate row houses. This row house design reduces the visual scale of the large building and creates a streetscape more in keeping with the tightly knit residential buildings across the street of Reynolds Avenue. Further review of the materials and their cohesiveness can be explored once the architectural perspectives and renderings are presented at subsequent meetings.

11. Ocular Windows

    Response: The intent of the windows was to provide additional light within the interior, but based on preliminary structural designs the ceiling heights will not support the window location, therefore they have been omitted from the recent design, refer to Sheet PB-6.2.

12. Masonry Corners

    Response: As noted, the use of brick façade elements on the Reynolds Avenue apartment building is intended to create a visual connection with the Main Street mixed-use building. Due to the differing scales and uses of the buildings different masonry accent treatments were applied. Further review of the materials and their cohesiveness can be explored once the architectural perspectives and renderings are presented at subsequent meetings.

- ARCHITECTURAL DETAILS, MATERIALS AND METHODS

13. Glass and Curtain Wall Stair Tower

    Response: The transparency of the stair tower is an intended design feature. Apartment exit stairways can be crime risk areas due to poor visibility and seclusion. The design intent is to reduce potential blind spots and eliminate seclusion by exposing the stairs and entryway to the exterior via large, glazed facades. Additionally, the stairs themselves will be a design element incorporating materials and colors to add character to the building design. Further review of glazing treatments and stair design can be explored once the architectural perspectives and renderings are presented at subsequent meetings.

14. Storefront Glass

    Response: Comment noted, the design intent is a narrow simple frame, to maximize glazed area, and a black finish.

- MECHANICAL SYSTEMS

15. System Locations

    Response: The design intent is that mechanical equipment (HVAC outdoor heat pumps, ventilation fans, etc.) will be rooftop mounted for both buildings.

16. Meter Locations

    Response: Electrical service equipment and meters will be located on the eastern sides of both buildings. Notations showing the proposed areas have been added to the Proposed Site Plan, refer to Sheet PB-2.

Thank you for the opportunity to submit this information for your review. We look forward to meeting you at the next available Planning Board Meeting. If you, or the Board, have any comments or questions, please do not hesitate to contact our office.

Sincerely,



Jay Diesing RA AIA

December 2, 2025

Jay Diesing RA AIA
Mauri Architects, PC

73 Mansion Street
Poughkeepsie, NY 12601

RE: New Buildings
One mixed use and one apartment building
654 Main Street
Poughkeepsie, NY
CBK # 25177

Mr. Diesing:

I have reviewed and calculated the utility sizing for the domestic water, sanitary and sprinkler system requirements for the above project.

Mixed Use Building

Domestic Water:
The plumbing fixture unit count for the mixed use building is 84 fixture units. From the 2025 plumbing code of NYS (Table E103.3 (3)) table estimating demand:

The domestic water demand is 39 gpm. A 2" water main is required to serve the building.

Sanitary:
The plumbing fixture unit total for the mixed use building is 101 fixture units. From the 2025 plumbing code of NYS (Table 710.1 (1)) building drains and sewers:

A 6" sanitary pipe pitched at a minimum 1/8" per foot would be required.

Sprinkler System
The most demanding occupancy of the building is mercantile. NFPA 13 categorizes this occupancy as ordinary group II. The required fire flow is as follows:

Ordinary Group II (1500 sq. ft. @.2 gpm/sq. ft.)	=	300 gpm
Hose stream (inside/outside)	=	250 gpm
Total		550 gpm

The 550 gpm is required in the street main and 300 gpm is required at the building sprinkler service.

3740 Wildwood Street
Yorktown Heights, NY 10598

129 Clove Branch Road Suite 104
Hopewell Junction, NY 12533

Tele: 914-509-8161 Fax: 914-509-8162

Jay Diesing RA AIA
New Buildings
One mixed use and one apartment building
654 Main Street
Poughkeepsie, NY

CBK # 25177

Hydrant Report – City of Poughkeepsie Fire Department
Hydrant 389
7/21/23 – Static Pressure 64 psi
Residual flow 650 gpm @ 26 psi

Based on the hydrant flow report we can extrapolate the residual pressure available for the building sprinkler system would be 38 psi.

The available water system flow and pressure is adequate to serve the building sprinkler system requirements.

Apartment Building

Domestic Water:
The plumbing fixture unit count for the apartment building is 153 fixture units. From the 2025 plumbing code of NYS (Table E103.3 (3)) table estimating demand:

The domestic water demand is 55 gpm. A 2" water main is required to serve the building.

Sanitary:
The plumbing fixture unit total for the apartment building is 234 fixture units. From the 2025 plumbing code of NYS (Table 710.1 (1)) building drains and sewers:

A 6" sanitary pipe pitched at a minimum 1/8" per foot would be required.

Sprinkler System
The most demanding occupancy of the building is residential. NFPA 13 categorizes this occupancy as light hazard. The required fire flow is as follows:

Light Hazard (1500 sq. ft. @.1 gpm/sq. ft.)	=	150 gpm
Hose stream (inside/outside)	=	100 gpm
Total		250 gpm

The 250 gpm is required in the street main and 150 gpm is required at the building sprinkler service.

Hydrant Report – City of Poughkeepsie Fire Department
Hydrant 512
6/21/23 – Static Pressure 60 psi
Residual flow 839 gpm @ 31 psi

3740 Wildwood Street
Yorktown Heights, NY 10598
129 Clove Branch Road Suite 104
Hopewell Junction, NY 12533
Tele: 914-509-8161 Fax: 914-509-8162

Jay Diesing RA AIA
New Buildings
One mixed use and one apartment building
654 Main Street
Poughkeepsie, NY

CBK # 25177

Based on the hydrant flow report we can extrapolate the residual pressure available for the building sprinkler system would be 58 psi.

The available water system flow and pressure is adequate to serve the building sprinkler system requirements.

Should you have any questions or require any further information, please don't hesitate to call.

Respectfully,

C. Mark Velzy, P.E.
Principal
CBK Engineering, PC

3740 Wildwood Street
Yorktown Heights, NY 10598

129 Clove Branch Road Suite 104
Hopewell Junction, NY 12533

Tele: 914-509-8161 Fax: 914-509-8162

TAX MAP

SCALE N.T.S.

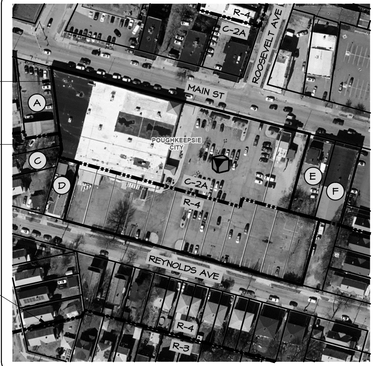

LINE OF PARCELS INCLUDED IN PROPOSED PROJECT / LOT LINE ADJUSTMENTS

LINE OF ZONING DISTRICT BOUNDARY, TYP

TAX MAP INFORMATION

SYMBOL	GRID NUMBER	OWNER OF RECORD
	6161-33-543870 -526859 -530858 -539857 -537856 -540855 -544854 -548853 -551852 -555851 -559850 -563849 -567848	EFDS REALTY CORP PO BOX 868 NEWBURGH, NY 12551
	6161-33-564864	JUST 4 PAUL LLC PO OX 868 NEWBURGH, NY 12551
A	6161-25-518877	CATHERINE MAIN ST PROPERTY LLC 650 MAIN ST POUGHKEEPSIE, NY 12601
B	6161-33-513868	NESHEIWAT, JEHAD 90 CRESTWOOD BLVD POUGHKEEPSIE, NY 12603
C	6161-33-515865	NESHEIWAT, JEHAD 5 FOUNTAIN PL POUGHKEEPSIE, NY 12601
D	6161-33-522860	PATTERSON, JOHN A 2 REYNOLDS AVE POUGHKEEPSIE, NY 12603
E	6161-33-569862	GEMMATI, ANTONIO 17 MILLER RD POUGHKEEPSIE, NY 12603
F	6161-33-573861	GEMMATI BROTHER INC 30 MANCHESTER RD POUGHKEEPSIE, NY 12603

SITE LOC. MAP

SCALE N.T.S.

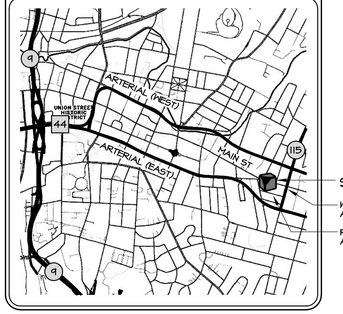

SITE
MORRALL AVE
REYNOLDS AVE

INDEX TO DRAWINGS

SHT. #	TITLE
PB-1	PROPOSED SITE PLAN, MAPS & CHARTS
PB-1.1	EXISTING CONDITIONS PLAN
PB-2	PARTIAL SITE PLAN - REMOVALS & ENLARGED PROPOSED SITE PLAN
PB-3	PROPOSED LANDSCAPING PLAN & DETAILS
PB-3.1	PROPOSED APARTMENT LANDSCAPING PLAN & DETAILS
PB-4	PROPOSED LIGHTING PLAN & DETAILS
PB-4.1	PROPOSED LIGHTING FIXTURE CUT-SHEETS
PB-5	PROPOSED FIRE AERIAL ACCESS PLAN
PB-6	PROJECT & 648 MAIN STREET ELEVATIONS
PB-6.1	648 MAIN STREET ELEVATIONS
PB-6.2	26 REYNOLDS AVENUE ELEVATIONS
CP-1	CIVIL PLAN
CP2	EXISTING CONDITIONS & DEMOLITION PLAN
CP-3	SITE DETAILS

PLANNING BOARD APPROVAL

CITY PLANNING BOARD
CITY OF POUGHKEEPSIE, NEW YORK

SITE PLAN APPROVAL:

FILE NO:

PROJECT NAME: 654 MAIN STREET

PROJECT LOCATION: 654 MAIN STREET, POUGHKEEPSIE NY 12601

APPLICANT: JAY DIESING, RA - MAURI ARCHITECTS PC

OFFICIALLY APPROVED AT THE PLANNING BOARD MEETING

HELD THE _____ DAY OF _____, 2_____

PLANNING CHAIR: _____

DESIGNEE: _____

DATE SIGNED: _____

CONDITION(S): _____

_____

_____

_____

DEPARTMENTAL SIGNATURES

_____
FIRE CHIEF DATE

_____
POLICE CHIEF DATE

_____
BUILDING INSPECTOR DATE

_____
CITY ENGINEER DATE

_____
COMMISSIONER OF PUBLIC WORKS DATE

PARKING ANALYSIS

119 EXISTING PARKING SPACES ON SITE

PROPOSED PARKING CALCULATIONS

BUILDING / USE	REQUIRED	PROPOSED
MARKET FRESH RETAIL SALES	127 PS	33 PS
MIXED-USE BUILDING RETAIL SALES & APARTMENTS	8 PS 13 PS	11 PS
APARTMENT BUILDING APARTMENTS	26 PS	43 PS
TOTAL	174 PS	87 PS

PARKING NOTE

1. VARIANCE TO PERMIT 87 PARKING SPACES IN LIEU OF 175 WAS GRANTED BY THE CITY OF POUGHKEEPSIE ZONING BOARD OF APPEALS ON MAY 13, 2025

ZONING DATA CHART

CITY OF POUGHKEEPSIE

REGULATION		PARCEL 1 (MARKET FRESH) ZONE C-2A			PARCEL 2 (MIXED USE) ZONE C-2A			PARCEL 3 (APARTMENT) ZONE R-4		
		REQUIRED		PROPOSED	REQUIRED		PROPOSED	REQUIRED		PROPOSED
LOT AREA		MIN	-----	75,555 SF± (1.73 ACRES±)	MIN	R-6 DENSITY (5) 1-BR @ 800 (2) 2-BR @ 1,200 6,400 SF	11,745 SF± (0.27 ACRES±)	MIN	(18) STUDIO & 1-BR @ 2,200 39,600 SF	40,060 SF± (0.92 ACRES±)
LOT WIDTH		MIN	-----	415'-7"±	MIN	-----	79'-11"±	MIN	30'	270'-0"±
FRONTAGE		MIN	40'	419'-7"±	MIN	40'	80'-0"±	MIN	-----	270'-0"±
FRONT YARD SETBACK		MIN	10'	0'-10"±	MIN	10'	10'-0"±	MIN	20'	20'-0"±
SIDE YARD SETBACKS		MIN	10'	1'-1"±	MIN	10'	10'-0"±	MIN	15' or 1/2 HEIGHT OF BUILDING (15')	26'-0"±
REAR YARD SETBACK		MIN	20'	84'-4"±	MIN	20'	48'-1"±	MIN	15' or 1/2 HEIGHT OF BUILDING (15')	26'-5"±
FLOOR AREA RATIO (FAR)		MAX	2.0	0.50± (37,950 / 75,555)	MAX	2.0	0.87± (10,240 / 11,795)	MAX	-----	N/A
LOT COVERAGE		MAX	60%	50.2%± (37,950 / 75,555)	MAX	60%	29.1%± (3,430 / 11,795)	MAX	40%	17.6%± (7,056 / 40,060)
BUILDING HEIGHT		MAX	-----	26'-9"± (EXISTING)	MAX	-----	39'-0"±	MAX	3 STORIES, 40'	2 STORIES, 29'-9"±
OPEN SPACE	200 SF / STUDIO 300 SF / 1-BR 400 SF / 2-BR	MIN	-----	N/A	MIN	R-4 OPEN SPACE (5) 1-BR @ 300 (2) 2-BR @ 400 2,300 SF TOTAL	2,690 SF±	MIN	(8) STUDIO @ 200 (10) 1-BR @ 300 4,600 SF TOTAL	8,310 SF±
PARKING	MULTI-FAMILY: 1 PS / STUDIO 1.5 PS / 1-BR 2 PS / 2-BR +10% VISITOR RETAIL SALES: 1 PS / 300 SF	MIN	RETAIL SALES: 37,950 / 300 = 126.5 127 PS TOTAL	33 PS	MIN	MULTI-FAMILY: (5) 1-BR @ 1.5 = 7.5 (2) 2-BR @ 2 = 4 11.5 + 10% = 12.1 (13 PS SUBTOTAL) RETAIL SALES: 2,195 / 300 = 7.3 (8 PS SUBTOTAL) 21 PS TOTAL	11 PS	MIN	MULTI-FAMILY: (8) STD @ 1 = 8 (10) 1-BR@ 1.5 = 15 23 + 10% = 25.3 26 PS TOTAL	43 PS

GENERAL NOTES

1. THE PROPOSED BUILDING SHALL COMPLY WITH THE 2025 BUILDING CODE OF NEW YORK STATE, LOCAL CODES & ALL OTHER APPLICABLE CODES & ORDINANCES.
2. PROJECT LOCATED IN THE CITY OF POUGHKEEPSIE FIRE DISTRICT.
3. PROJECT LOCATED IN THE POUGHKEEPSIE CITY SCHOOL DISTRICT.
4. A KNOX BOX FOR BUILDING ACCESS BY EMERGENCY SERVICES WILL BE INSTALLED AT EACH BUILDING ENTRANCE. LOCATION & INSTALLATION REQUIREMENTS TO BE COORDINATED WITH THE FIRE DEPARTMENT.
5. FIRE SPRINKLER SYSTEMS WILL BE INSTALLED THROUGHOUT THE NEW BUILDINGS IN ACCORDANCE WITH THE 2025 BUILDING CODE OF NEW YORK STATE & NFPA 13 STANDARDS & REQUIREMENTS.
6. FIRE ALARM SYSTEMS WILL BE INSTALLED THROUGHOUT THE BUILDING IN ACCORDANCE WITH THE 2025 BUILDING CODE OF NEW YORK STATE & NFPA 72 STANDARDS & REQUIREMENTS.

ALL EXISTING SITE INFORMATION TAKEN FROM SITE PLAN PREPARED BY CHAZEN COMPANIES, ENGINEERS / SURVEYORS, ENTITLED "RITE-AID PHARMACY 654 MAIN STREET", DATED JANUARY 16, 1996. ADDITIONAL FIELD OBSERVATIONS TAKEN BY MAURI ARCHITECTS PC.

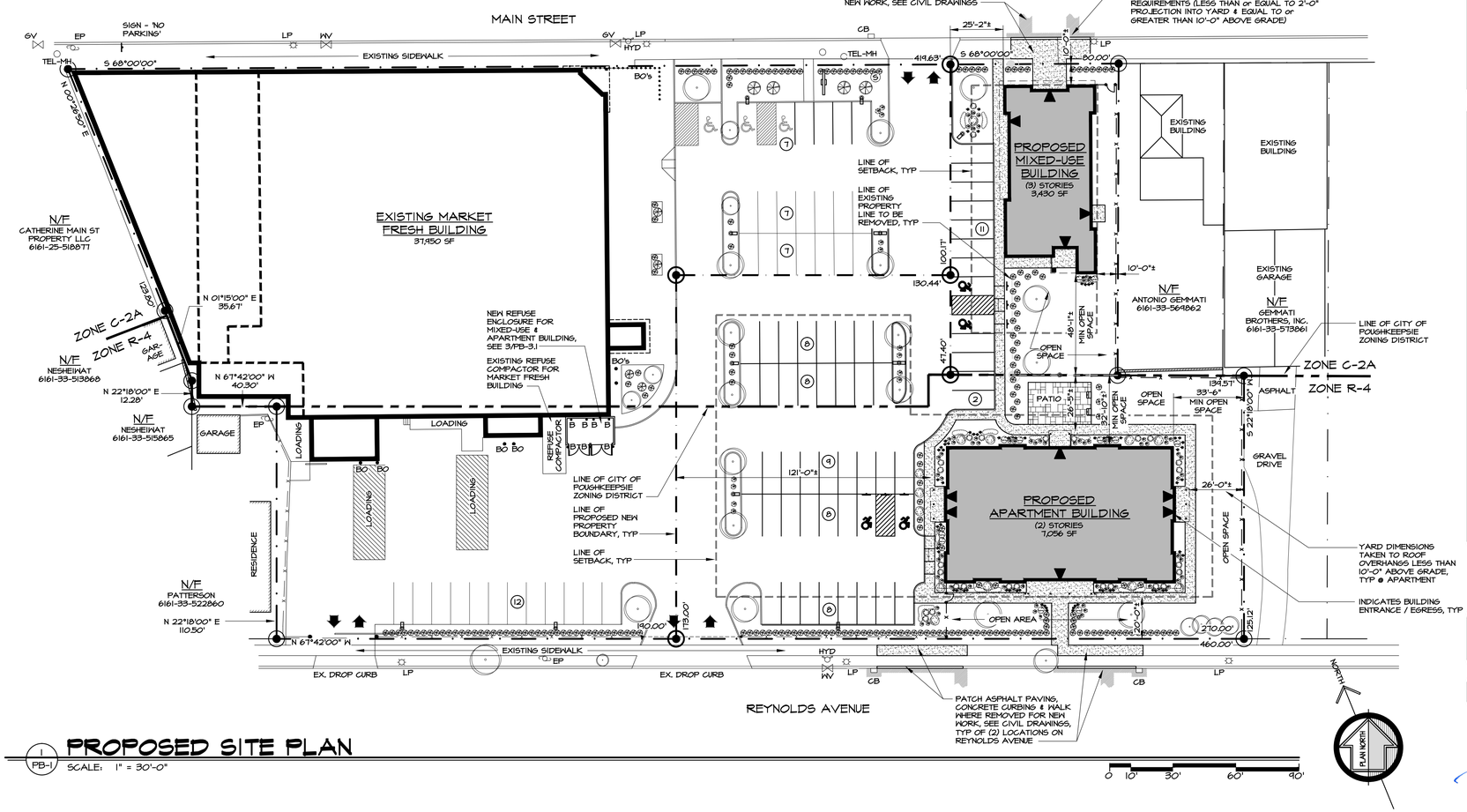

PROPOSED SITE PLAN

PB-1

SCALE: 1" = 30'-0"

project no.
09-33.23

date
31 JAN 2024

drawn by
BP

revision date	description
03 DEC 2025	PLANNING BOARD COMMENTS

PROPOSED LOT LINE ADJUSTMENTS & COMMERCIAL/ MULTI-FAMILY DEVELOPMENT AT: 654 MAIN ST, POUGHKEEPSIE, NY

PROPOSED SITE PLAN, MAPS & CHARTS

MAURI ARCHITECTS PC
73 MANSION STREET POUGHKEEPSIE NY 12601 845.452.1330 mail@mauriarchs.com

willingham
187 Washington Poughkeepsie, New York 12601 T 845.452.1300 F 845.452.1305 www.willinghamgroup.com

SHEET NO. PB-1

PURSUANT TO SECTION 7209 (2) OF THE REGULATIONS OF THE COMMISSIONER OF EDUCATION UNAUTHORIZED ALTERATIONS TO THIS DOCUMENT IS A VIOLATION OF THE LAW

REGISTERED ARCHITECT MARTIN T DIESING 033240 STATE OF NEW YORK

EXISTING CONDITIONS PLAN

PB-1.1 SCALE: 1" = 30'-0"

project no.
09-33.23

date
31 JAN 2024

drawn by
BP

revision date	description
03 DEC 2025	PLANNING BOARD COMMENTS

MARKET fresh

PROPOSED LOT LINE ADJUSTMENTS & COMMERCIAL/ MULTI-FAMILY DEVELOPMENT AT: 654 MAIN ST, POUGHKEEPSIE, NY

EXISTING CONDITIONS PLAN

willingham
we
Civil Engineering
Land Planning
Surveying
283 Washington
Troy, NY 12180 P 518.274.2323
F 518.274.2324
www.willinghamengineering.com

MAURI ARCHITECTS PC
73 MANSION STREET POUGHKEEPSIE NY 12601 845.452.1090 mauri-architects.com

sheet no.
PB-1.1

PURSUANT TO SECTION 6415 (5) OF THE REGULATIONS OF THE COMMISSIONER OF EDUCATION UNAUTHORIZED ALTERATIONS TO THIS DOCUMENT IS A VIOLATION OF THE LAW

REGISTERED ARCHITECT MARTIN T DIESING III 033240 STATE OF NEW YORK

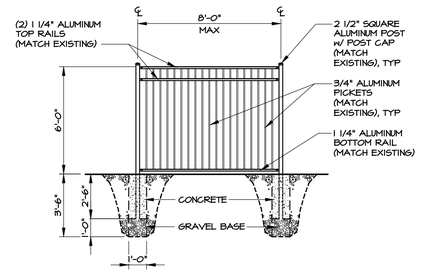

2 PB-2 FENCING DETAIL

SCALE: 1/4" = 1'-0"

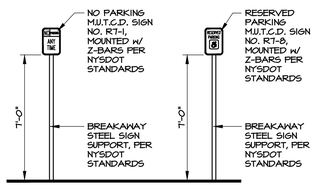

3 PB-2 SIGN DETAILS

SCALE: 1/4" = 1'-0"

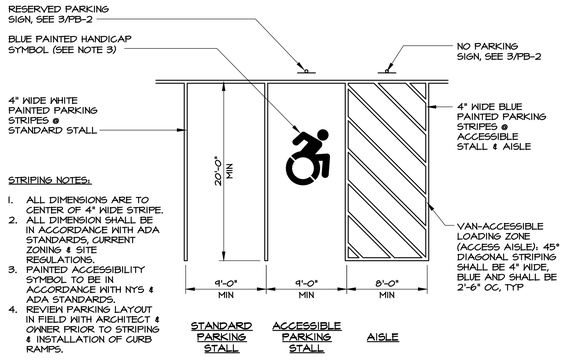

STRIPING NOTES:

1. ALL DIMENSIONS ARE TO CENTER OF 4" WIDE STRIPE.
2. ALL DIMENSION SHALL BE IN ACCORDANCE WITH ADA STANDARDS, CURRENT ZONING & SITE REGULATIONS.
3. PAINTED ACCESSIBILITY SYMBOL TO BE IN ACCORDANCE WITH NYS & ADA STANDARDS.
4. REVIEW PARKING LAYOUT IN FIELD WITH ARCHITECT & OWNER PRIOR TO STRIPING & INSTALLATION OF CURB RAMPS.

90° PARKING

4 PB-2 PARKING STRIPING DETAILS

SCALE: 1/8" = 1'-0"

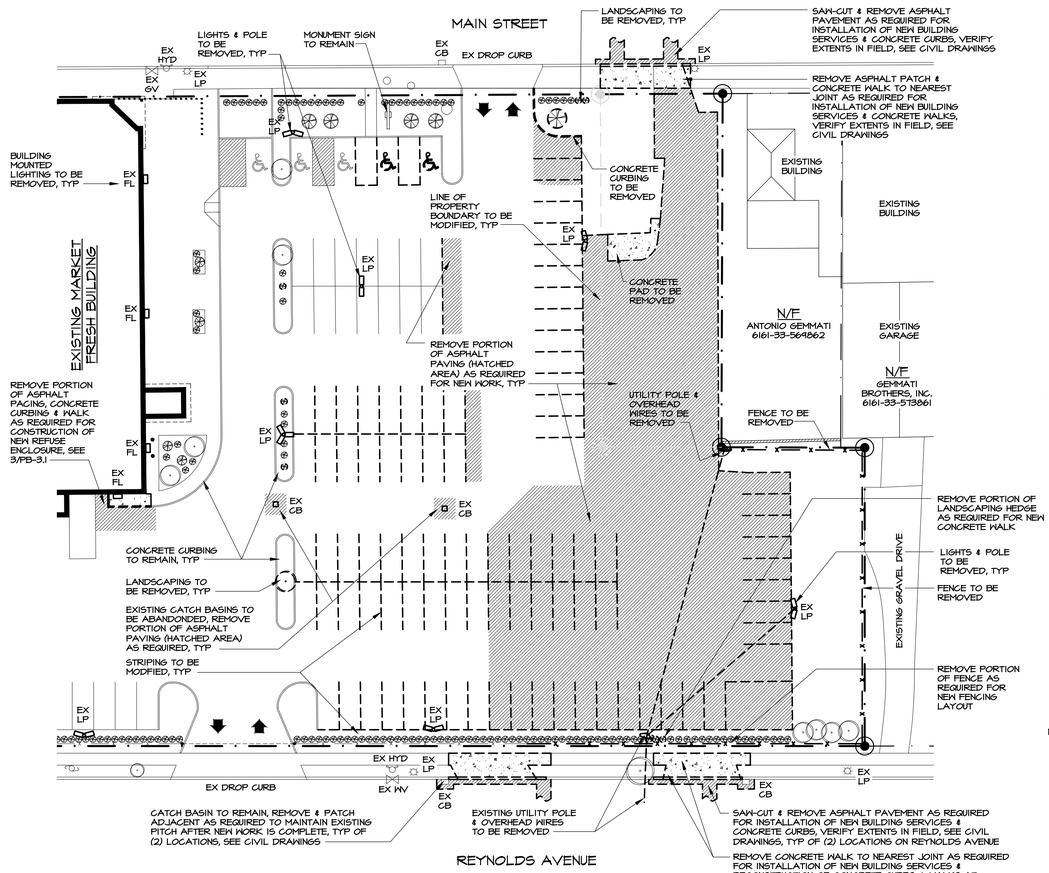

5 PB-2 PARTIAL SITE PLAN - REMOVALS

SCALE: 1" = 30'-0"

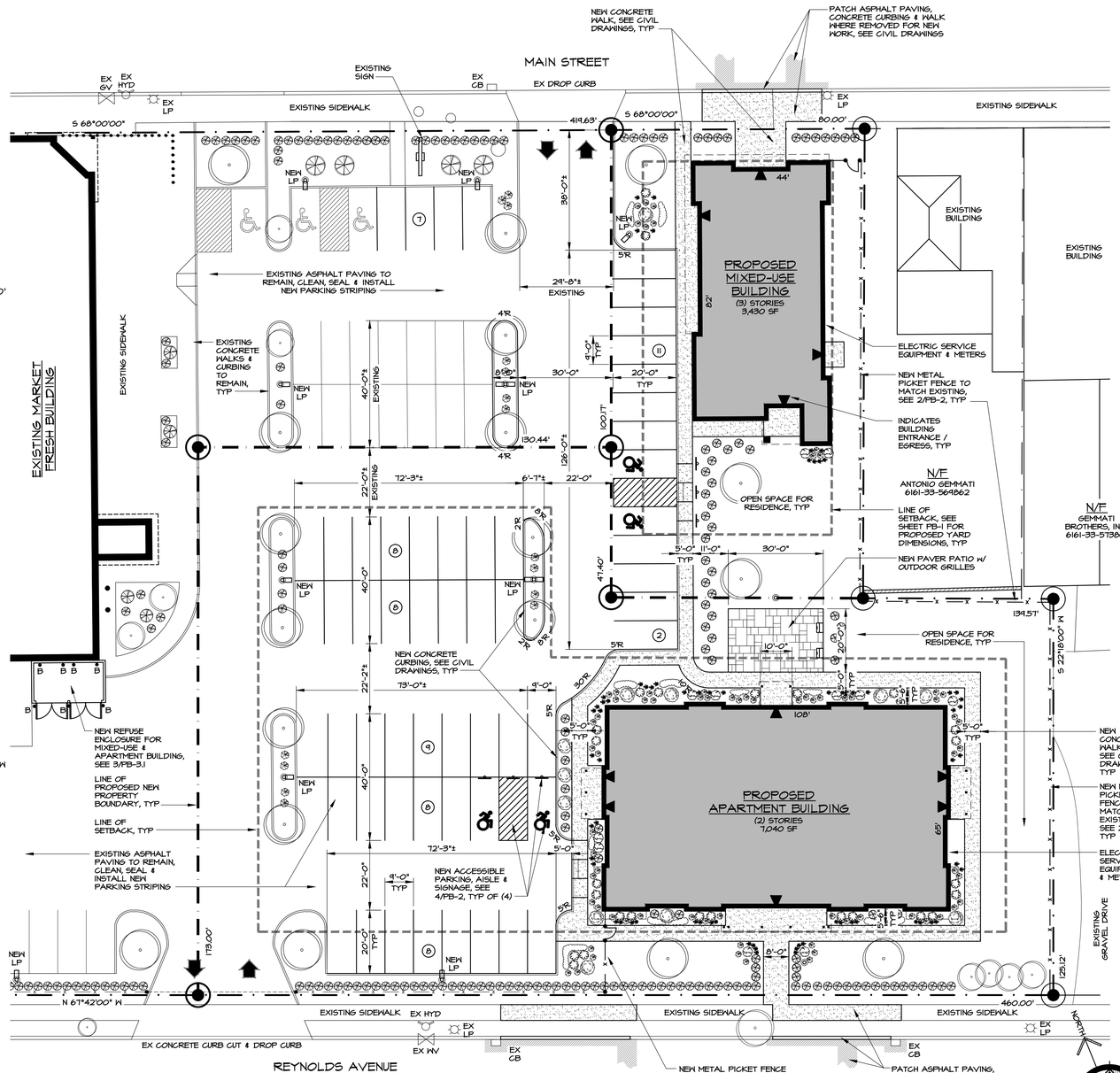

1 PB-2 ENLARGED PROPOSED SITE PLAN

SCALE: 1" = 20'-0"

project no.
09-33.23

date
31 JAN 2024

drawn by
BP

revision date	description
05 DEC 2025	PLANNING BOARD COMMENTS

MARKET fresh

PROPOSED LOT LINE ADJUSTMENTS & COMMERCIAL/ MULTI-FAMILY DEVELOPMENT AT: 654 MAIN ST, POUGHKEEPSIE, NY

PARTIAL SITE PLAN - REMOVALS & ENLARGED PROPOSED SITE PLAN

MAURI ARCHITECTS PC
73 MARKET STREET POUGHKEEPSIE NY 12601 845.452.1290 mauri-architects.com

willingham
Civil Engineering
221 Main Street
New Paltz, New York 12561
T 845.255.1529 F 845.255.1649
www.willinghamengineering.com

sheet no.
PB-2

PURSUANT TO SECTION 6415 (5) OF THE REGULATIONS OF THE COMMISSIONER OF EDUCATION UNAUTHORIZED ALTERATIONS TO THIS DOCUMENT IS A VIOLATION OF THE LAW

REGISTERED ARCHITECT MARTIN T DIESING III 033240 STATE OF NEW YORK

PLANTING SCHEDULE

KEY	QTY	BOTANICAL NAME	COMMON NAME	SIZE
TREES				
AL	4	AMELANCHIER LAEVIS 'CUMULUS'	CUMULUS SERVICEBERRY	3" CAL
CC	4	CARPINUS CAROLINIANA	MUSCLEWOOD / AMERICAN HORNBEAM	3" CAL
FP	10	CERCIS CANADENSIS 'FOREST PANSY'	FOREST PANSY REDBUD, SINGLE-STEM	2" CAL
SHRUBS				
AZ	11	AZALEA X 'MANDARIN LIGHTS'	MANDARIN LIGHTS AZALEA	7 GAL
BA	6	JUNIPERUS SCOPULORUM 'BLUE ARROW'	BLUE ARROW JUNIPER	3' HEIGHT
HM	13	HYDRANGEA MACROPHYLLA 'WHITE'	WHITE BIGLEAF HYDRANGEA	7 GAL
IC	20	ILEX CRATA 'SKY PENCIL'	SKYROCKET PENCIL HOLLY	2 1/2' HEIGHT
IG	87	ILEX GLABRA 'STRONGBOX'	STRONGBOX INKBERRY HOLLY	3 GAL
LV	15	LIGUSTRUM X VICARYI	GOLDEN TICKET PRIVET	5 GAL
RO	25	ROSA X 'NOATRAUM'	FLOWER CARPET PINK ROSE	2 GAL
GRASSES				
FE	43	FESTUCA X 'COOL AS ICE'	COOL AS ICE FESCUE	2 GAL
LM	86	LIRIOPE MUSCAI 'SILVERY SUNPROOF'	SILVERY SUNPROOF LILYTURF	1 GAL
PA	24	PENNISETUM ALOPECUROIDES 'HAMELIN'	DWARF FOUNTAIN GRASS	2 GAL

PLANTING NOTES

1. ALL PLANTING BEDS SHALL BE MULCHED WITH SHREDDED BARK MULCH AT A MINIMUM DEPTH OF 3".
2. INSTALL WEED BLOCK OR EQUAL BELOW MULCH BED.
3. LAWN AREAS SHALL BE SEEDED, FERTILIZED AND PROTECTED WITH OAT OR WHEAT STRAW.
4. PLANT SIZE INDICATED SHALL BE AT TIME OF PLANTING.
5. SEEDING SHALL HAVE A MINIMUM, 90% GERMINATION MIXTURE AS FOLLOWS:
   KENTUCKY BLUE GRASS - 40% BY WEIGHT OF TOTAL SEED
   PERENNIAL RYEGRASS - 35% BY WEIGHT OF TOTAL SEED
   RED FESCUE - 25% BY WEIGHT OF TOTAL SEED

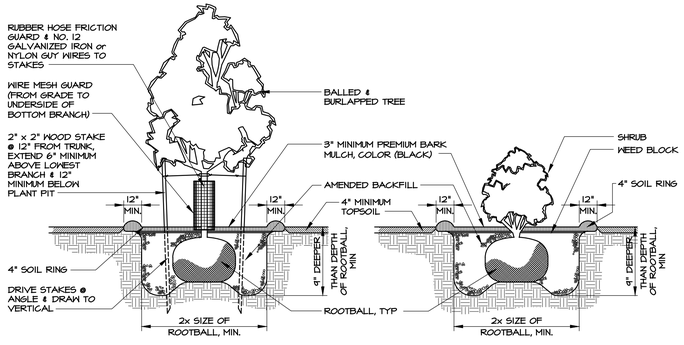

2 PB-3 **LANDSCAPING DETAILS**

SCALE: NTS

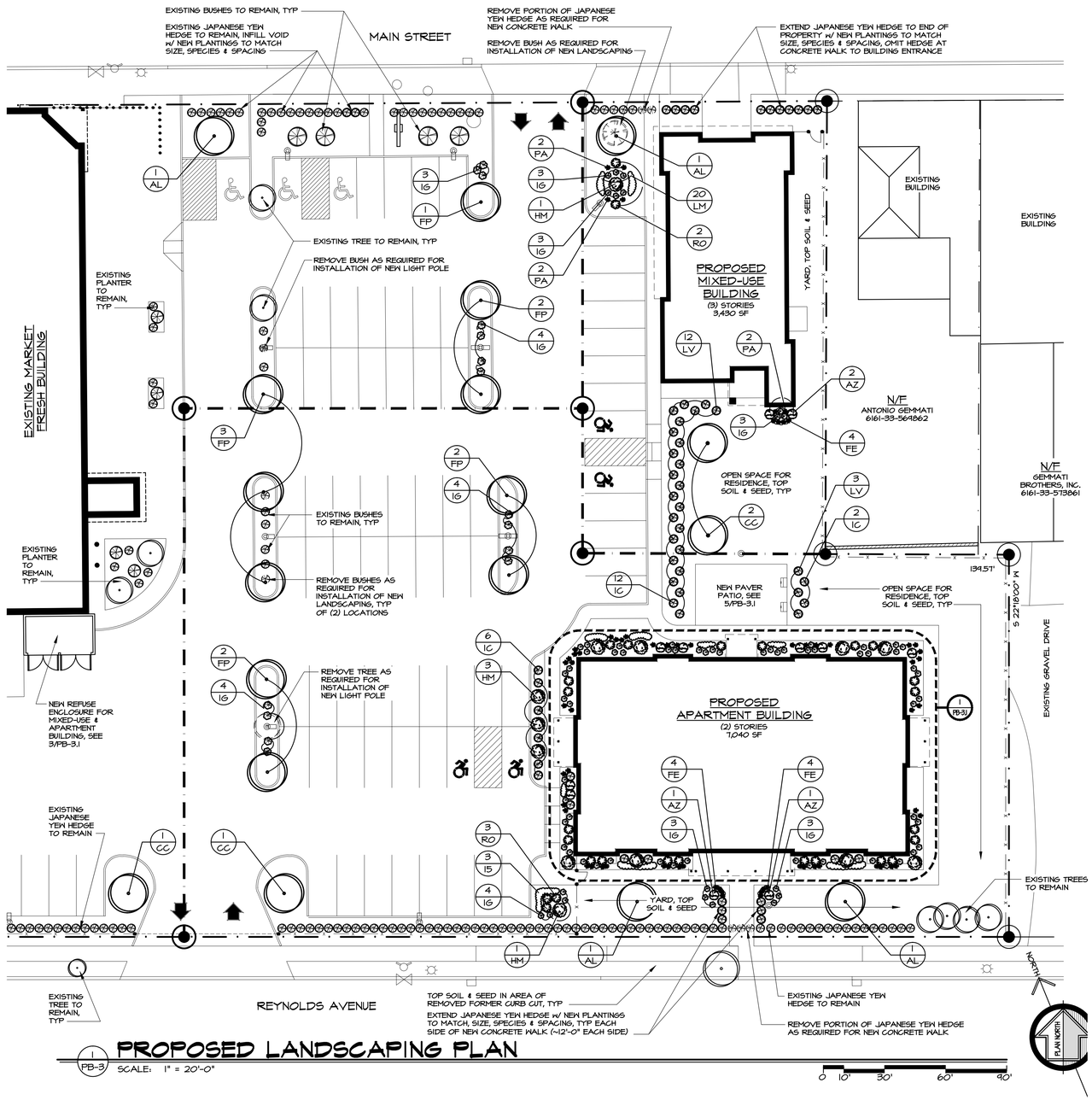

1 PB-3 **PROPOSED LANDSCAPING PLAN**

SCALE: 1" = 20'-0"

project no.
09-33.23

date
31 JAN 2024

drawn by
BP

revision date	description
09 DEC 2025	PLANNING BOARD COMMENTS

MARKET fresh

PROPOSED LOT LINE ADJUSTMENTS & COMMERCIAL/ MULTI-FAMILY DEVELOPMENT AT: 654 MAIN ST, POUGHKEEPSIE, NY

PROPOSED LANDSCAPING PLAN & DETAILS

sheet no.
PB-3

willingham
331 Washington
Poughkeepsie, NY 12601
Tel 845.454.2255
Fax 845.454.2265
www.willinghamlandscape.com

MAURI ARCHITECTS PC
73 MANSION STREET POUGHKEEPSIE NY 12601 845.452.1250 mail@mauriarchitects.com

PURSUANT TO SECTION 7209 (2) OF THE REGULATIONS OF THE COMMISSIONER OF EDUCATION UNAUTHORIZED ALTERATIONS TO THIS DOCUMENT IS A VIOLATION OF THE LAW

REGISTERED ARCHITECT MARTIN T DIESING JR 033240 STATE OF NEW YORK

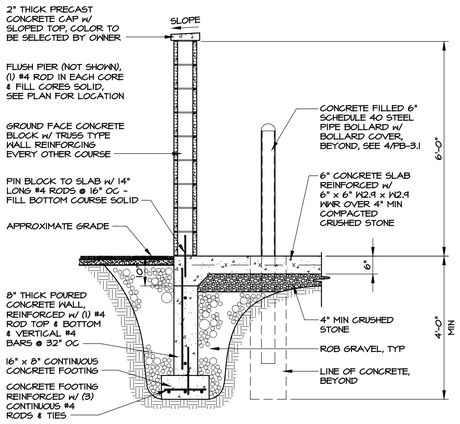

2/PB-3.1 REFUSE SECTION

SCALE: 1/2" = 1'-0"

0 6" 1' 5'

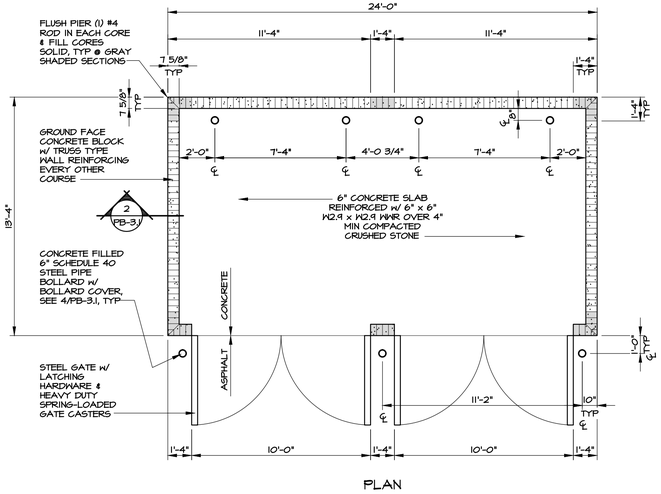

PLAN

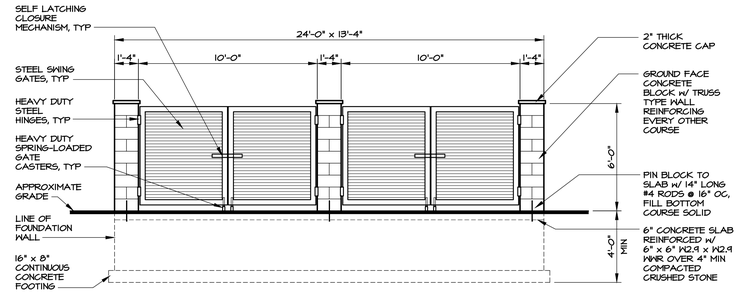

ELEVATION

3/PB-3.1 REFUSE ENCLOSURE PLAN & ELEVATION

SCALE: 1/4" = 1'-0"

0 1' 2' 5' 10'

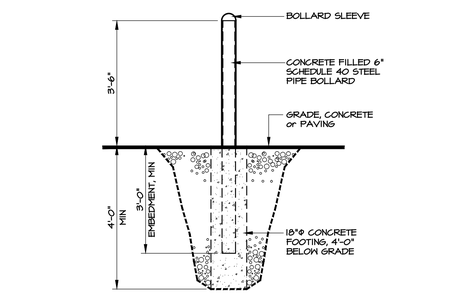

4/PB-3.1 BOLLARD DETAIL

SCALE: 1/2" = 1'-0"

0 6" 1' 5'

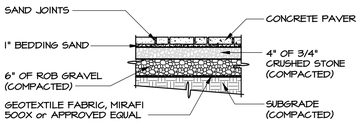

5/PB-3.1 PAVER PATIO DETAIL

SCALE: 1/2" = 1'-0"

0 6" 1' 5'

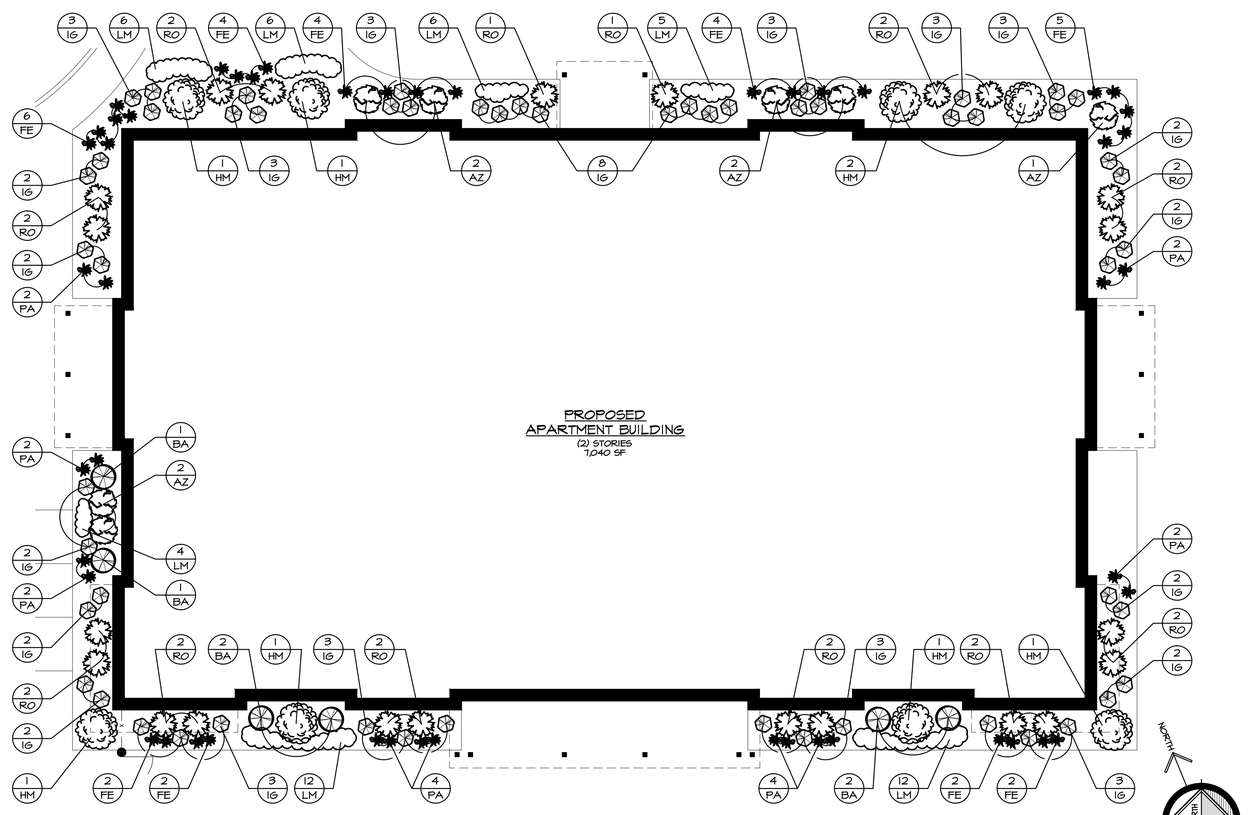

1/PB-3.1 PROPOSED APARTMENT LANDSCAPING PLAN

SCALE: 1/8" = 1'-0"

0 1' 5' 10' 20'

project no.
09-33.23

date
31 JAN 2024

drawn by
BP

revision date	description
05 DEC 2025	PLANNING BOARD COMMENTS

MARKET fresh

PROPOSED LOT LINE ADJUSTMENTS & COMMERCIAL/ MULTI-FAMILY DEVELOPMENT AT: 654 MAIN ST, POUGHKEEPSIE, NY

PROPOSED APARTMENT LANDSCAPING PLAN & DETAILS

willingham
we
33 Bloomfield
Hartford, CT 06105
T 860.523.7252
www.willinghamlandplanning.com

MAURI ARCHITECTS PC
73 HANSON STREET POUGHKEEPSIE NY 12601 845.452.1050 mari-architects.com

SHEET NO.
PB-3.1

PURSUANT TO SECTION 6413 (B) OF THE REGULATIONS OF THE COMMISSIONER OF EDUCATION UNAUTHORIZED ALTERATIONS TO THIS DOCUMENT IS A VIOLATION OF THE LAW

REGISTERED ARCHITECT MARTIN T DIESING JR 033240 STATE OF NEW YORK

LIGHTING STATISTICS

DESCRIPTION	AVERAGE	MAX	MIN	MAX/MIN	AVG/MIN
PAVED AREAS	1.8 fc	14.9 fc	0.1 fc	149.0 : 1	18.0 : 1

LIGHTING SCHEDULE

KEY	QTY	TYPE	HEIGHT	LUMENS	B-U-G	CATALOG NO.
A1	2	CYCLONE LIGHTING, TRIBECA, POLE MOUNT LED (DUAL)	14'-0" AFG	6771 (EACH)	B3 - U0 - G2	BEGSxA-FGF-T5-P50-30K-MVOLT
A2	6	CYCLONE LIGHTING, TRIBECA, POLE MOUNT LED	14'-0" AFG	7060	B2 - U0 - G2	BEGSxA-FGF-T4HS-P80-30K-MVOLT
A3	3	CYCLONE LIGHTING, TRIBECA, POLE MOUNT LED	14'-0" AFG	6771	B3 - U0 - G2	BEGSxA-FGF-T5-P50-30K-MVOLT
B1	4	HOLOPHANE, WALL MOUNT LED	12'-0" AFG	2858	B1 - U0 - G1	HLWPCS-P10-30K-MVOLT-T4M
B2	6	HOLOPHANE, WALL MOUNT LED	15'-0" AFG	2858	B1 - U0 - G1	HLWPCS-P10-30K-MVOLT-T4M
B3	3	HOLOPHANE, WALL MOUNT LED	12'-0" AFG	2474	B1 - U0 - G1	HLWPCS-P10-30K-MVOLT-TFTM
B4	2	HOLOPHANE, WALL MOUNT LED	15'-0" AFG	2474	B1 - U0 - G1	HLWPCS-P10-30K-MVOLT-TFTM
C1	8	JUNO WAFER, SOFFIT MOUNT ULTRA THIN 6" LED WAFER	8'-0" AFG	1032	———	WF6-LED-30K
C2	5	JUNO WAFER, SOFFIT MOUNT ULTRA THIN 6" LED WAFER	10'-0" AFG	1032	———	WF6-LED-30K
D	2	AMERICAN REVOLUTION, POLE MOUNT LED	8'-0" AFG	2513	B1 - U0 - G1	247CL-P101-MVOLT-30K-R5

LIGHTING NOTES

1. FIXTURES, POLES AND ACCESSORIES FINISHES TO BE BLACK.

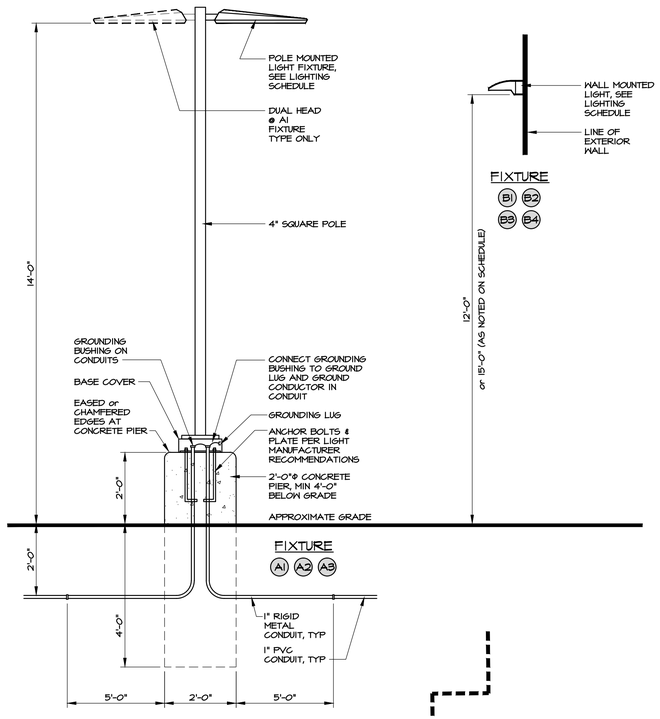

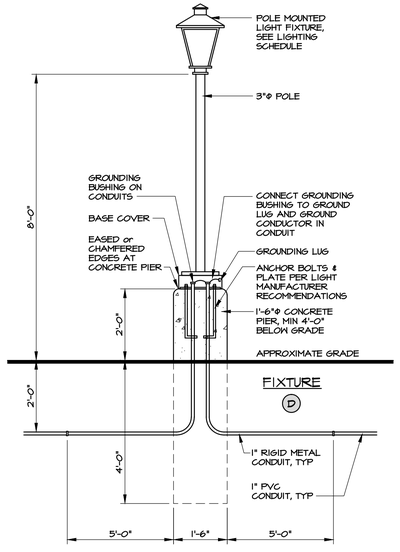

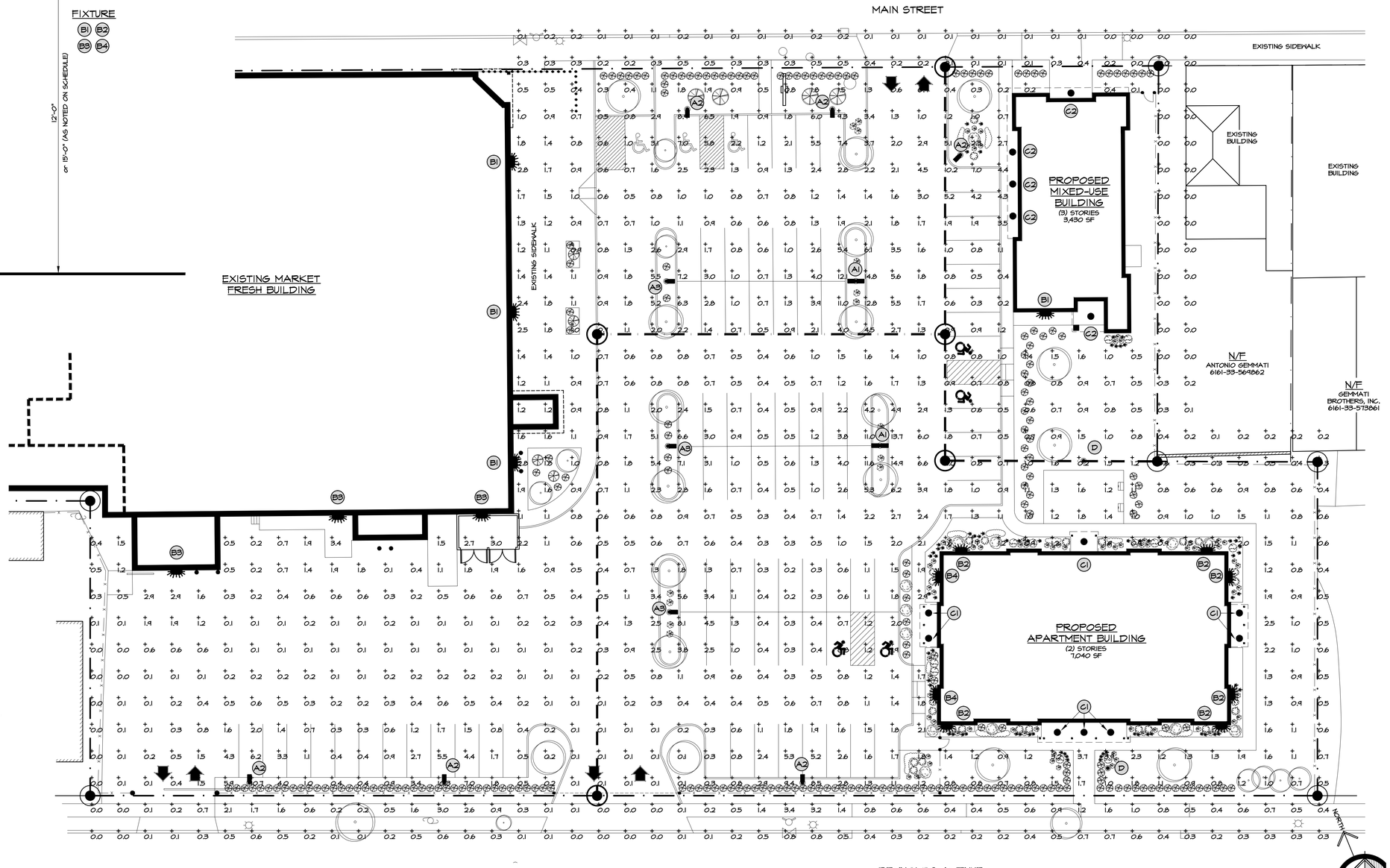

2 LIGHTING DETAILS

PB-4 SCALE: 1/2" = 1'-0"

0 6" 1' 5'

1 PROPOSED LIGHTING PLAN

PB-4 SCALE: 1" = 20'-0"

0 10' 30' 60' 90'

project no. 09-33.23

date 31 JAN 2024

drawn by BP

revision date	description
03 DEC 2025	PLANNING BOARD COMMENTS

MARKET fresh

PROPOSED LOT LINE ADJUSTMENTS & COMMERCIAL/ MULTI-FAMILY DEVELOPMENT AT: 654 MAIN ST, POUGHKEEPSIE, NY

PROPOSED LIGHTING PLAN & DETAILS

willingham
we
331 Broadway
Beacon, New York 12508
T 845.765.2435
www.willinghamengineering.com

MAURI ARCHITECTS PC
73 MARKET STREET POUGHKEEPSIE NY 12601 845.452.1300 mail@mauriarchitects.com

SHEET NO. PB-4

PURSUANT TO SECTION 645 (3) OF THE REGULATIONS OF THE COMMISSIONER OF EDUCATION UNAUTHORIZED ALTERATIONS TO THIS DOCUMENT IS A VIOLATION OF THE LAW

REGISTERED ARCHITECT MARTIN T DIESING JR 033240 STATE OF NEW YORK

cyclone

Tribeca BECS1A/BECS2A
Approval – Specification

Project: | **Order:**
Qty: | **Luminaire:** | **Type:**

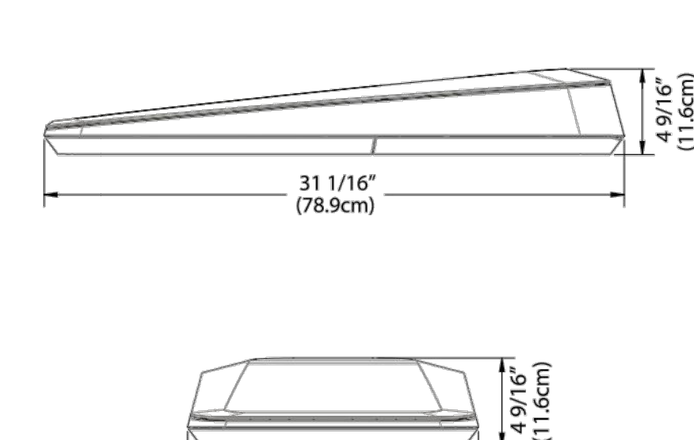

EPA: 0.83 ft² **Weight:** 41.5 lbs / 18.8 kg

Hood Module: Rectangular shaped, made from injection molded A360 aluminum, mechanically attached to the head module.

Head Module: Rectangular shaped, made from injection molded A380 aluminum, equipped with adjustment steps to facilitate the luminaire leveling by +/- 5°. The module is designed to be installed on a horizontal tenon of 1.66" (4.2cm) Ø to 1.9" (4.8cm) Ø for the BECS1A and on a tenon of 2 3/8" (6cm) Ø for the BECS2A by 6" (15.2cm) long, with two (2) stainless steel brackets, mechanically retained by four (4) 3/8-16 UNC stainless steel bolts. Also equipped with a European style connection terminal bloc for 6 to 18 AWG wires, mechanically installed inside.

Door Module: Rectangular shaped, made from injection molded A360 aluminum with an integrated hinge. A long rectangular push button allows the opening and access to the components inside the luminaire. The certification, maintenance and luminaire code labels are located on the back of the door.

Optical Module: The molded A384.0-F aluminum heat sink is designed to minimize the temperature of the LEDs, increasing their longevity and efficiency. The high efficiency Orion LED optical engine is mechanically assembled on the heat sink. The optical lenses are cured directly on the LED board and offer an IP66 ingress protection rating. The lifetime of the LEDs is 100,000 hours. It is based on the LM-80 test and extrapolated with TM-21. This data is calculated when 50% of the LEDs produce 70% of their initial luminous flux (L70). The minimum color rendering index (CRI) is 70. The optical lenses are made of acrylic and designed to illuminate only where needed while achieving excellent uniformity with maximum spacing. Produce 0% uplight. The combination of two distribution types (backward optics) is also available in the same optical module. Tempered clear (FCG) or frosted (FGF) flat glass lenses are attached to a cast aluminum frame. With the No Lens (NL) option, a white decorative acrylic protection plate is mechanically assembled under the optical module. The available light distribution types are T1, T1A, T1AHS, T2, T2HS, T2M, T2MHS, T3, T3HS, T3M, T3MHS, T4, T4HS, T5.

Driver Module: Class 1 (P30 to P150). Primary tension is of 120 to 480VAC Volts, 50/60Hz, THD max 20% with a high-power factor of 90%. Operating temperature is -40°F (-40°C) to 113°F (45°C). The regulator offers an output of 0-10 Volts and is ROHS compliant. Assembled with pull-out connectors. Complete with 10kV/5kA or 20 kV/10kA tripolar surge protection for live-MALT, live-neutral and neutral-MALT lines according to IEEE/ANSI C62.41 2002 C.

Wiring / Hardware: Type TEWT 14-7 AWG, 12" (30.5cm) minimum exceeding luminaire. All electrical connections between the modules are provided with quick-disconnect connectors for easy maintenance. All outside accessible hardware is made of 304 stainless steel.

Color: All Cyclone colors are available in textured (TX) or smooth (SM) finish. A durable polyester powder coating is applied and meets the AAMA 2604 requirements (5 years exposure to all weather conditions). The finish meets the ASTM G7, B117, D1654 and D2247 requirements relative to salt spray and humidity resistance. **Cyclone recommends the textured finish for this product**.

Warranty: 5-year limited warranty. Complete warranty terms located at:
http://www.cyclonelighting.com/assets/Legal/Cyclone-Sales-TermsConditions-en.pdf

Stamp/Approval:
Name: **Date:**

Name: Page 1 of 2
Date:

© 2023 Acuity Brands Lighting, Inc. All Rights Reserved.

cyclone

Tribeca BECS1A/BECS2A
Approval – Specification

Project: | **Order:**
Qty: | **Luminaire:** | **Type:**

Ordering Code

Model	Lens	Distribution	Performance Package	CCT	Volts	Surge Protector
BECS1A (tenon of 1,66" to 1,9" Ø)	**FGC** Flat Glass Clear	**T1** Type 1	**P30** 7,000	**30K** 3000K	**MVOLT** 120-277VAC	**10KV** 10kV/5kA
BECS2A (tenon of 2 3/8" Ø)	**FGF** Flat Glass Frosted	**T1A** Type 1A	**P50** 8,000	**40K** 4000K	**HVOLT** 347-480VAC	**20KV** 20kV/10kA
	NL* No Lens	**T1AHS** Type 1A with HS	**P60** 10,500		**120**	
	* Consult factory for IP rating when the NO lens option is selected.	**T2** Type 2	**P70** 13,700		**208**	
		T2HS Type 2 with HS	**P80** 15,500		**240**	
		T2M Type 2M	**P90** 20,700		**277**	
		T2MHS Type 2M with HS	**P100** 23,400		**347**	
		T3 Type 3	**P110** 26,400		**480**	
		T3HS Type 3 with HS	**P120** 28,700			
		T3M Type 3M	**P130** 30,800			
		T3MHS Type 3M with HS	**P140** 32,100			
		T4 Type 4	**P150** 34,000			
		T4HS Type 4 with HS				
		T5 Type 5				
		* Backward optic				

Options	Photocell	Dimming	Color	Texture	Pre-finish
–	–	–	**BK** Black RAL9005	**TX** Textured	–
RMSOD7* Low-bay mount mini occupancy and daylight sensor	**PT** Photocell W/7-PIN receptacle (ANSI C136.41)	**DIM** 0-10 volts wire for external controls	**DG** Dark green RAL6012	**SM** Smooth	**MG** Marine grade pre-finish
RMSOD30* Universal mount occupancy and daylight sensor	**PX** Shorting cap W/7-PIN receptacle (ANSI C136.41)	**PND506** Program 50% for 6 hours (11PM to 5AM)	**MA** Marine blue RAL5013		
RMSOD45* High mount occupancy and daylight sensor	**PTL** Long life photocell W/7-PIN receptacle (ANSI C136.41)	**PND508** Program 50% for 8 hours (9PM to 5AM)	**SI** Metallic silver RAL9006 (smooth only)		
RMSOD45A* High mount aisleway occupancy and daylight sensor	**PTDR** 7-PIN receptacle (ANSI C136.41)	**SD** Field adjustable 10% increment step-dimming switch	**BZ** Dark bronze RAL8019		
RSDGR127* * 120-277VAC occupancy and daylight sensor			**BG** Burgundy RAL3005		
RSDGR348* * 347VAC or 480VAC occupancy and daylight sensor			**GM** Moss green RAL6005		
* For more details on rMSOD options please consult the specification nLight Air rMSOD spec sheet			**PG** Pale grey RAL7040		
** For more details on rSDGR options please consult the specification nLight Air rSDGR spec sheet			**WH** White RAL9003		
			BKH* Black Holophane		
			BZH* Dark bronze Holophane		
			GNH* Green Holophane		
			GHH* Graphite Holophane		
			GRH* Gray Holophane		
			SLH* Silver Holophane		
			WHH* White Holophane		
			* Holophane colors are only available in Smooth (SM) finish.		

*** Backward optic:** The Orion light engine features 180° orientable optics that can be customized as needed. This makes it a simple matter to combine two distribution types in a single light engine, simultaneously lighting a road and a bike path or sidewalk, for instance. Contact factory for more information.

Note: Actual performance may differ as a result of end-user environment and application. All values are design or typical values, measured under laboratory conditions at 25 °C. Specifications subject to change without notice. Please consult our web site for up-to-date product information and IES files.

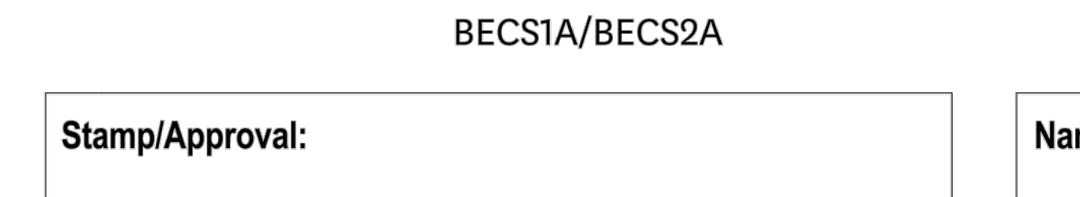

BECS1A/BECS2A

EPA: 0.83 ft² **Weight:** 41.5 lbs / 18.8 kg

Stamp/Approval:
Name: **Date:**

Name: Page 2 of 2
Date:

© 2023 Acuity Brands Lighting, Inc. All Rights Reserved.

FIXTURES
A1 A2 A3

HOLOPHANE
LEADER IN LIGHTING SOLUTIONS

Catalog Number	
Notes	Type

HLWPC2
Wallpack® Full Cutoff LED



Mechanical
- Heavy grade A360 cast aluminum (aluminum with <1% copper)
- Exterior parts are protected by a zinc-infused Super Durable TGIC thermoset powder coat finish that provides superior resistance to corrosion and weathering
- Mounts to a standard junction box
- Wet location listed
- IP65 rated housing, down light only
- ¾" painted threaded entry(¾" - 14 NPT) on each side and on top, accepts ¾" and ½" conduit
- ¾" threaded plugs are painted on each side
- Vibration tested to 1.5G per ANSI C136.31.

Electrical
- Certified by UL or CSA
- Rated for -40°C (-40°F) minimum ambient
- A programmable electronic driver with 0-10V control leads
- Available in: 120-277V 50/60 Hz and 347-480V 50/60 Hz,
- Standard: 3000K, 4000K and 5000K CCT (>70 CRI)
- Optional >80 CRI (3000K, 4000K and 5000K CCT)
- Internally mounted emergency battery backup for operation in an ambient temperature ranging from -20°C (-4°F) to 30°C (86°F), available with P10 thru P40 performance packages, non CEC compliant
- All surge protection meets ANSI/IEEE C62.41.2 10kV/10kA
- Standard surge protection is 20kV/10kA per ANSI C136.2
- Optional surge protection is 10kV/5kA per ANSI C136.2

Optical
- Light engine housing is IP66 rated
- Acrylic optical system
- Type V: E (entry), M (medium), R (rectangle) & W (wide)
- Asymmetric

Controls
- Field adjustable output (AO)
- Button style photocontrol (PE)
- Motion sensor & ambient photocontrol combination for mounting low (8-15') (MASL) and high (15-30') (MASH) mounting heights

Certification and Standards
- Luminaire is CSA listed, US and Canada
- Suitable for operation in an ambient temperature up to 40°C/104°F per UL or CSA certification
- Design lights Consortium® (DLC) qualified product. Not all versions of this product may be DLC qualified. Please check the DLC Qualified Products List at www.designlights.org/QPL to confirm which versions are qualified.
- LM-79 compliant
- The projected LED Lumen Maintenance shall be based only on IES LM-80-08 and TM-21

Warranty
5-year limited warranty. This is the only warranty provided and no other statements in this specification sheet create any warranty of any kind. All other express and implied warranties are disclaimed. Complete warranty terms located at: www.acuitybrands.com/support/warranty/terms-and-conditions.

Note: Actual performance may differ as a result of end-user environment and application.
All values are design or typical values, measured under laboratory conditions at 25 °C.
Specifications subject to change without notice.

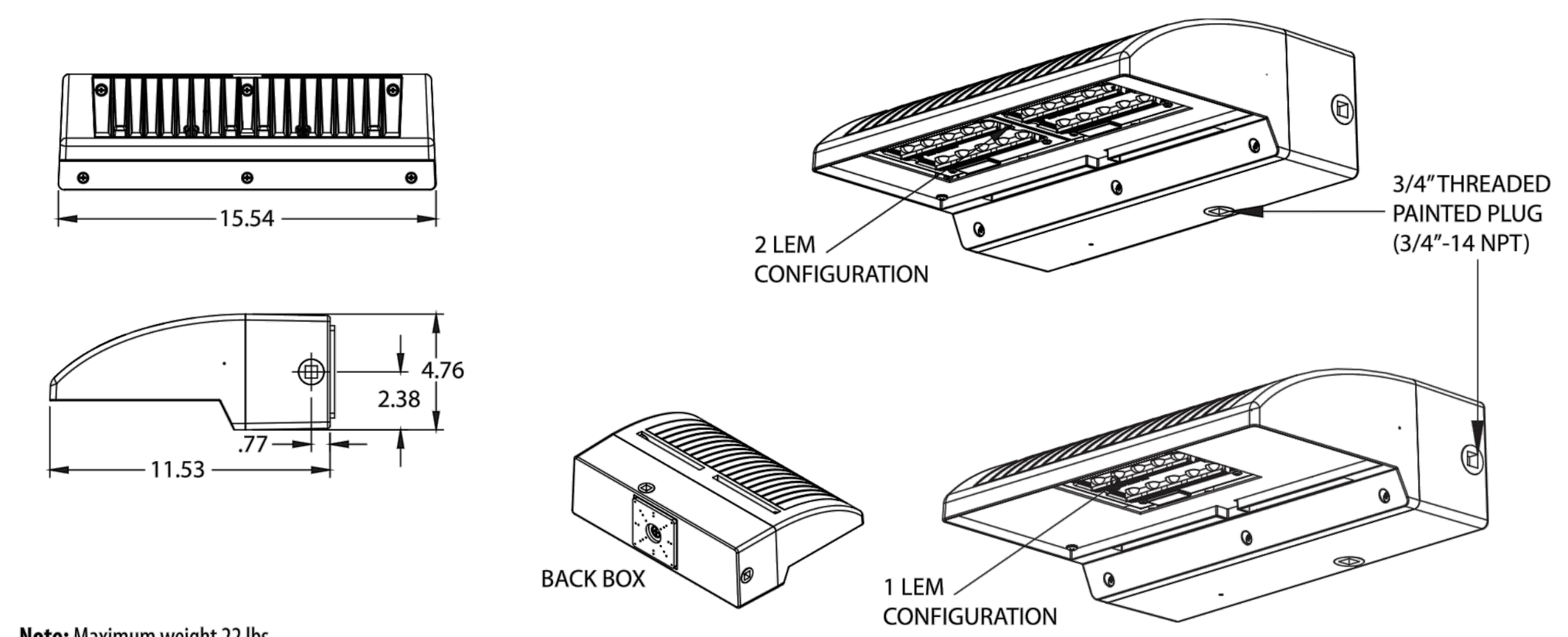

Note: Maximum weight 22 lbs.

© 2014-2024 Acuity Brands Lighting, Inc. All rights reserved.

HLWPC2
Wallpack® Full Cutoff LED

HOLOPHANE
LEADER IN LIGHTING SOLUTIONS

ORDERING INFORMATION

Example: HLWPC2 P20 40K AS T3M BZSDP

Series	Lumen Package	Color Temperature	Voltage	Optics	Color	CRI
HLWPC2 Wallpack Full Cutoff LED	1 LEM Package	AMB True Amber	120 120 volts	T2S Type 2 Short	BKSDP Black	Blank 70 CRI (STD)
	P10 3,100 lm	30K 3,000 K CCT	208 208 volts	T2M Type 2 Medium	BZSDP Bronze	80CRI 80 CRI
	P20 5,600 lm	40K 4,000 K CCT	240 240 volts	T3S Type 3 Short	GYSDP Grey	
		50K 5,000 K CCT	277 277 volts	T3M Type 3 Medium	WHSDP White	
	2 LEM Package		347 347 volts	T4M Type 4 Medium		
	P30 7,800 lm		480 480 volts	TFTM Forward Throw Medium		
	P40 9,900 lm		HVOLT 347/480 volts	ASYDF Asymmetric Diffuse		
	P50 11,700 lm		MVOLT 120-277 volts	SYMDF Symmetric Diffuse		
	(Nominal Lumens, 4000K)					

Options:

Adjustable/Programmable Options
AO Field Adjustable Output

Circuit Options
2CI 2 Independent Circuits

Control - Motion Sensor Options
MASL[1,2] Motion / Ambient Sensor, 8-15' Mounting Height Ambient Sensor Enabled at 5 FC
MASH[1,2] Motion / Ambient Sensor, 15-30' Mounting Height Ambient Sensor Enabled at 5 FC

Control - Photocontrol Options
PE Button Style Photocontrol
P3 N.E.M.A. Twistlock Receptacle Mount -3 PIN
P7 N.E.M.A. Twistlock Receptacle Mount -7 PIN
PCLL DTL Long Life Twistlock Photocontrol for Solid State
PSC Shorting Cap

Fuse Option
SF Single Fuse
DF Double Fuse

Safety Option
EM Integral Emergency Battery
TP Tamper Resistant Hardware

Surge Protection Option - 20kV/10kA is Standard
10KV 10kV/5kA Surge Protection, in place of 20kV/10kA

Notes
1 MASL and MASH sensors are not allowed with P10 lumen package option selected.
2 MASL and MASH options reduce luminaire light output to roughly 30% (not full OFF) when no motion is detected. When motion is detected, light output temporarily increases to 100%.

Options Location

Motion/Ambient Sensor mount options for Low (8-15') (MASL) and Height (15-30') (MASH) applications

N.E.M.A. Twistlock Receptacle P3 and P7 Options, P7 Shown

Internal Emergency Battery Test Button - EM Option

Test Button - EM Option

Button Style Photocontrol - PE Option

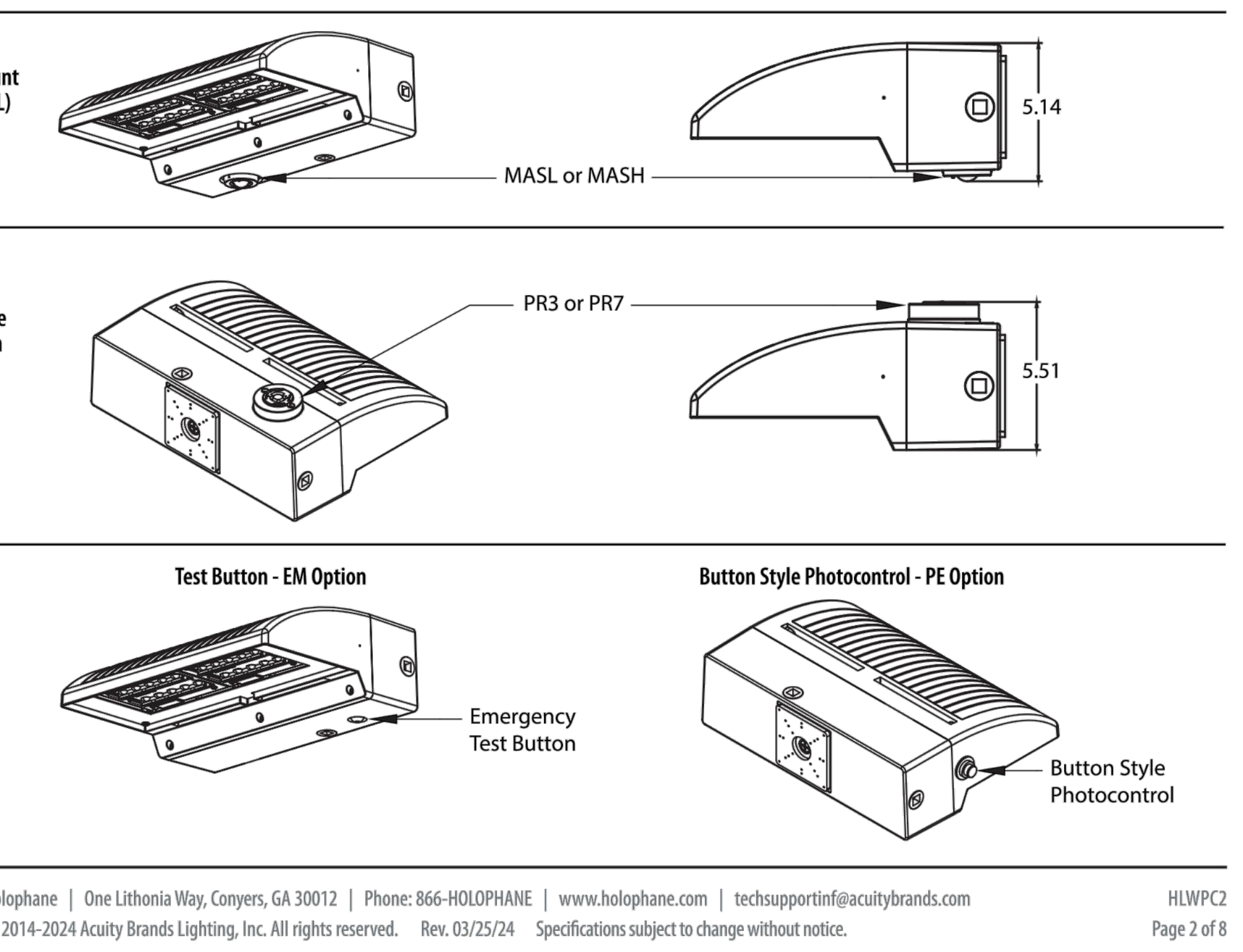

© 2014-2024 Acuity Brands Lighting, Inc. All rights reserved.

FIXTURES
B1 B2 B3 B4

WF4/WF6/WF8 SWW5

JUNO

Juno Wafer™ LED Downlight Series
4", 6" & 8" LED Ultra-Thin Wafer Switchable Downlight
5CCT Switchable White Downlight

Project:
Fixture Type:
Location:
Contact/Phone:

WF4/WF6/WF8 SWW5 Series



Product Features
The 4",6"& 8" round smooth with 5CCT Switchable White technology provide high-quality light output and efficiency featuring a switch for easy color temperature adjustment to choose between 2700K, 3000K, 3500K, 4000K, or 5000K - while eliminating the need for recessed housings.
- Round smooth lens trim designed to distribute precise even illumination for general purpose areas
- Canless - no can required; equals easy to install and less labor
- 5 selectable color temperatures to choose with a switch ranging from warm (2700K) to daylight (5000K) allowing customization for endless applications

Applications
- Residential and light commercial applications including multi-family, hospitality, assisted living, dormitories and other multi-level construction
- Shallow slim profile allows for easy remodel or new construction insulated and drop ceiling installations
- Wet rated and airtight: perfect for showers, bathrooms, and outdoor soffits

Dimensions

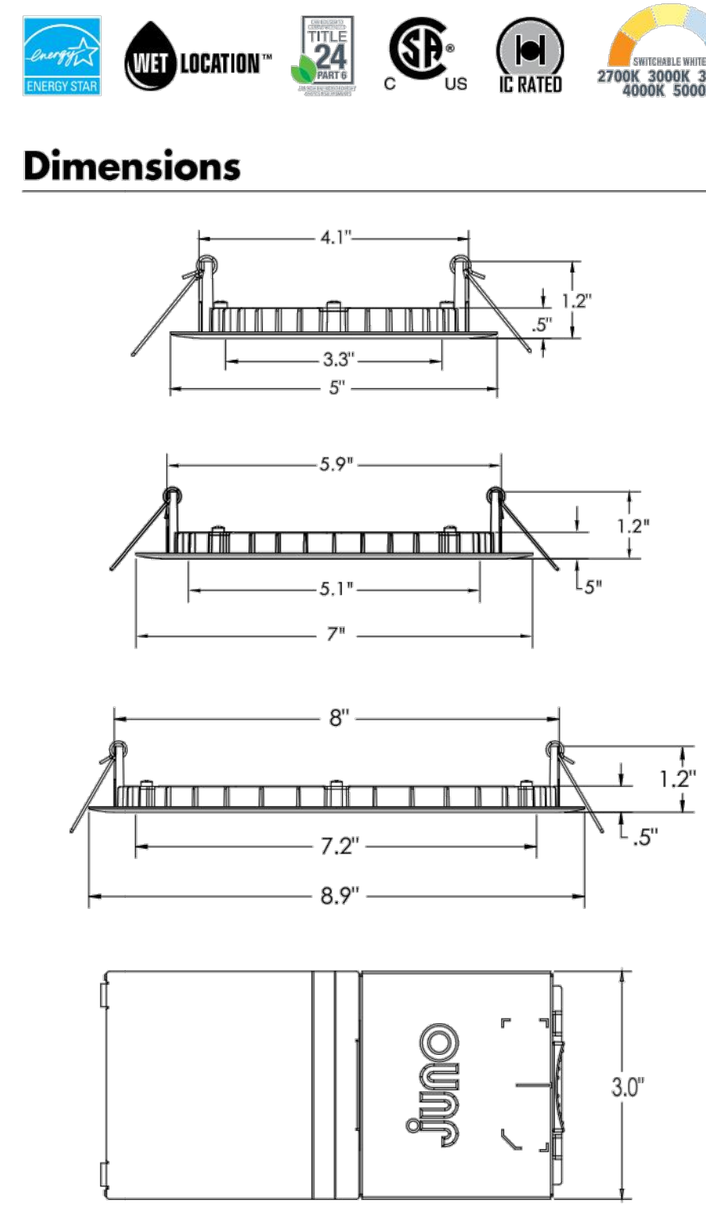

Performance

Delivered Lumens	670L (WF4), 970L (WF6) and 1640L (WF8) Nominal at 3000K
LED Color Temperature	Switchable White (27K, 30K, 35K, 40K, 50K) Default set at 3000K
CRI	90+
Voltage	Dedicated 120V
Dimming	Dimmable to 10% with triac (120v)

For a list of compatible dimmers see JUNO-WAFERS-DIM

Specifications

	WF4	WF6	WF8
Aperture:	3.3"	5.1"	7.2"
Ceiling Opening:	4.25"	6.25"	8.25"
Overlap Trim:	5"	7"	8.9"
Height:	1.2"	1.2"	1.2"

© 2021-2024 Acuity Brands Lighting, Inc.

FIXTURES
C1 C2

American Revolution Full Cutoff LED
Series 247CL

PRODUCT OVERVIEW



Applications:
Streetscapes
Walkways
Pathways
Parks

Features:
- Colonial LED lantern, replaces up to 250W HID models for street and area lighting applications
- Fifteen (15) LED performance packages deliver just the right amount of light for any given application up to 9,300 lumens
- Available in color temperature choices of 2700K, 3000K and 4000K
- Four (4) distinct light distribution options provide design flexibility, available in Type II, Type III, Type IV, and Type V
- Die-cast aluminum housing, engineered for sturdy lifelong performance
- Luminaire is rated for 3g vibration per ANSI C136.31
- Die-cast aluminum hood features a trigger latch (TL) option and captive thumb screws for fast, easy electrical and optical chamber access
- Standard paint finish is smooth gloss
- Housing is tenon pole-mounted and designed for use with a 3" tall by 2-3/8" to 3" diameter tenon, and secured by three set screws
- Rated LED and driver life greater than 100,000 hours at 25°C
- Surge protection device (standard) exceeds ANSI/IEEE C62.41-2002 Category C High (10kV/10kA) and ANSI C136.2-2015 Enhanced (10kV/5kA). 20KV Option exceeds ANSI/IEEE C62.41-2002 Category C High (10kV/10kA) and ANSI C136.2-2015 Extreme (20kV/10kA)
- Equipped with LED electronic 0-10V dimmable driver with DALI driver option

Standards:
- Complies with all applicable ANSI C136 standards.
- CSA listed and suitable for up to 40°C ambient
- DesignLights Consortium® (DLC) qualified product. Not all versions of this product may be DLC qualified. Please check the DLC Qualified Products List at www.designlights.org/QPL to confirm which versions are qualified.

DIMENSIONS

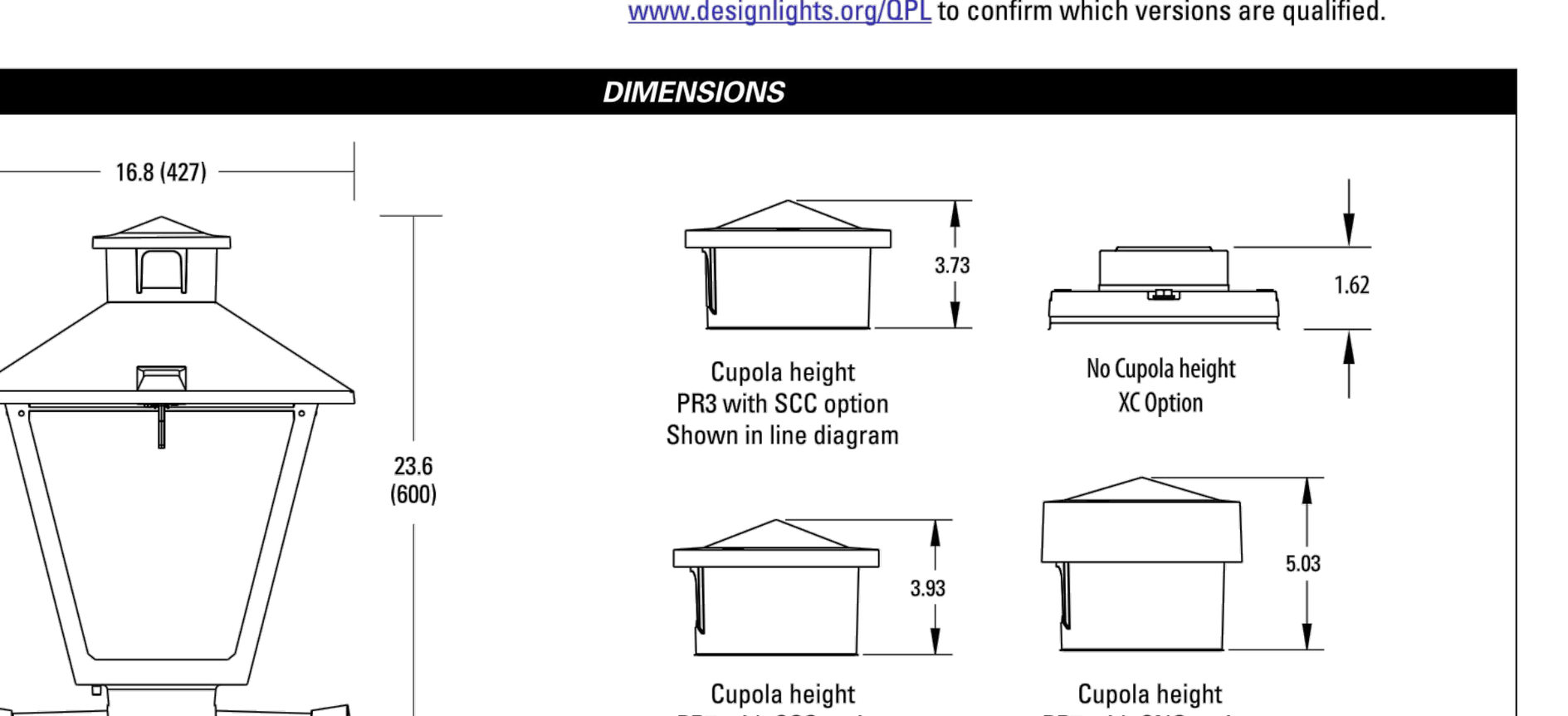

Effective Projected Area (EPA)
The EPA for the American Revolution Series 247 is 1.6 sq. ft.
Fixture weight = 36 lbs.

All dimensions are inches (millimeters) unless otherwise noted.

Note: Specifications subject to change without notice.
American Revolution Series 247CL LED

AEL American Electric Lighting

American Revolution LED
Series 247CL

ORDERING INFORMATION

Example: 247CL P154 MVOLT 30K R3 BK SCC PR7

Series
247CL American Revolution LED

Performance Package

Package	Input Watts	Lumens (nominal)
P101	20	2,300
P102	30	3,100
P103	40	4,000
P104	49	4,800
P151	30	3,500
P152	40	4,300
P153	50	5,200
P154	60	6,000
P155	70	6,800
P201	70	7,400
P202	80	8,100
P300	41	4,800
P301	60	7,000
P302	70	7,800
P303	80	8,600

Voltage
MVOLT 120-277V
HVOLT 347-480V
XVOLT 277-480V with enhanced power quality protection

Color Temperature (CCT)
27K 2700K
30K 3000K
40K 4000K

Distribution
R2 Type II
R3 Type III
R4 Type IV
R5 Type V

Paint (smooth gloss)
BK Black
GY Gray
DDB Dark Bronze
WH White
BZ Bronze

Cupola
SCC Standard cupola
SNC Smart node cupola
XC No cupola

Photocontrol Receptacle
NR No photocontrol receptacle
PR3 3 pin NEMA photocontrol
PR7 7 pin NEMA photocontrol

Options

Options
PCLL Solid State Long Life Photocontrol, 120-277V (fail off)
P34 Solid State Long Life Photocontrol, 347V (fail off)
P48 Solid State Long Life Photocontrol, 480V (fail off)
PCSS Solid state photocontrol, 120-277V (Not CSA Listed) (fail on)
SH Shorting cap
AO Field adjustable output module
DALI DALI driver (RFD required)

Miscellaneous
SS Stainless steel hardware
TL Tool-less trigger latch entry
NL1X1 1" x 1" NEMA label
NL2X2 2" x 2" NEMA label
XL Not CSA Listed
LDR Ladder Rest
CR Epoxy Pre-Coat Finish
20kV 20kV/10kA surge protection device

House-Side Shields
HSS House Side Shield

Prewired leads
L1H 1.5 ft. prewire leads
L03 3 ft. prewire leads
L10 10 ft. prewire leads
L20 20 ft. prewire leads
L25 25 ft. prewire leads
L30 30 ft. prewire leads

Special Packaging
SSP Sample pack (UPS)

Accessory
House Side Shield shipped separately and installed in the field
FHSSLEM10-15R2/R5 P10x or P15x package, R2 or R5 optic
FHSSLEM10-15R3 P10x or P15x package, R3 optic
FHSSLEM20-30R2/R5 P20x or P30x package, R2 or R5 optic
FHSSLEM20-30R3 P20x or P30x package, R3 optic
FHSSLEM45R2/R5 P45x package, R2 or R5 optic
FHSSLEM45R3 P45x package, R3 optic

Note: Check the OPTIONS MATRIX on Page 3 for compatibility & restrictions

© 20XX-2022 Acuity Brands Lighting, Inc. All Rights Reserved.

Warranty Five-year limited warranty. This is the only warranty provided and no other statements in this specification sheet create any warranty of any kind. All other express and implied warranties are disclaimed. Complete warranty terms located at: www.acuitybrands.com/support/warranty/terms-and-conditions

Note: Actual performance may differ as a result of end-user environment and application. All values are design or typical values, measured under laboratory conditions at 25 °C. Specifications subject to change without notice.

Please contact your sales representative for the latest product information.

FIXTURE
D

---

project no. 09-33.23

date 31 JAN 2024

drawn by BP

revision date	description
03 DEC 2025	PLANNING BOARD COMMENTS

MARKET fresh
654 MAIN ST, POUGHKEEPSIE, NY

PROPOSED LOT LINE ADJUSTMENTS & COMMERCIAL/ MULTI-FAMILY DEVELOPMENT AT:

PROPOSED LIGHTING FIXTURE CUT-SHEETS

willingham engineering
183 Main Street New Paltz, New York 12561
T 845.255.0210 F 845.256.8110
www.willinghamengineering.com

MAURI ARCHITECTS PC
13 MANSION STREET POUGHKEEPSIE NY 12601 845.452.1030 mauri-architects.com

sheet no. PB-4.1

PURSUANT TO SECTION 69.5 (B) OF THE REGULATIONS OF THE COMMISSIONER OF EDUCATION UNAUTHORIZED ALTERATIONS TO THIS DOCUMENT IS A VIOLATION OF THE LAW

REGISTERED ARCHITECT MARTIN T DIESING II 033240 STATE OF NEW YORK

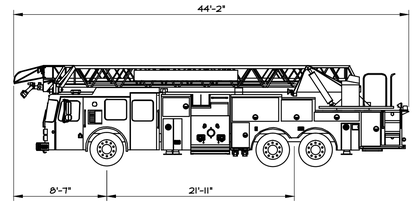

FIRE AERIAL (REFERENCE: 105' AERIAL LADDER 'PIERCE QUANTUM')
EXCEEDS SIZE SPECIFICATIONS FOR 2018 SPARTAN/SMEAL 100' TOWER LADDER

2/PB-5 FIRE AERIAL

SCALE: N.T.S.

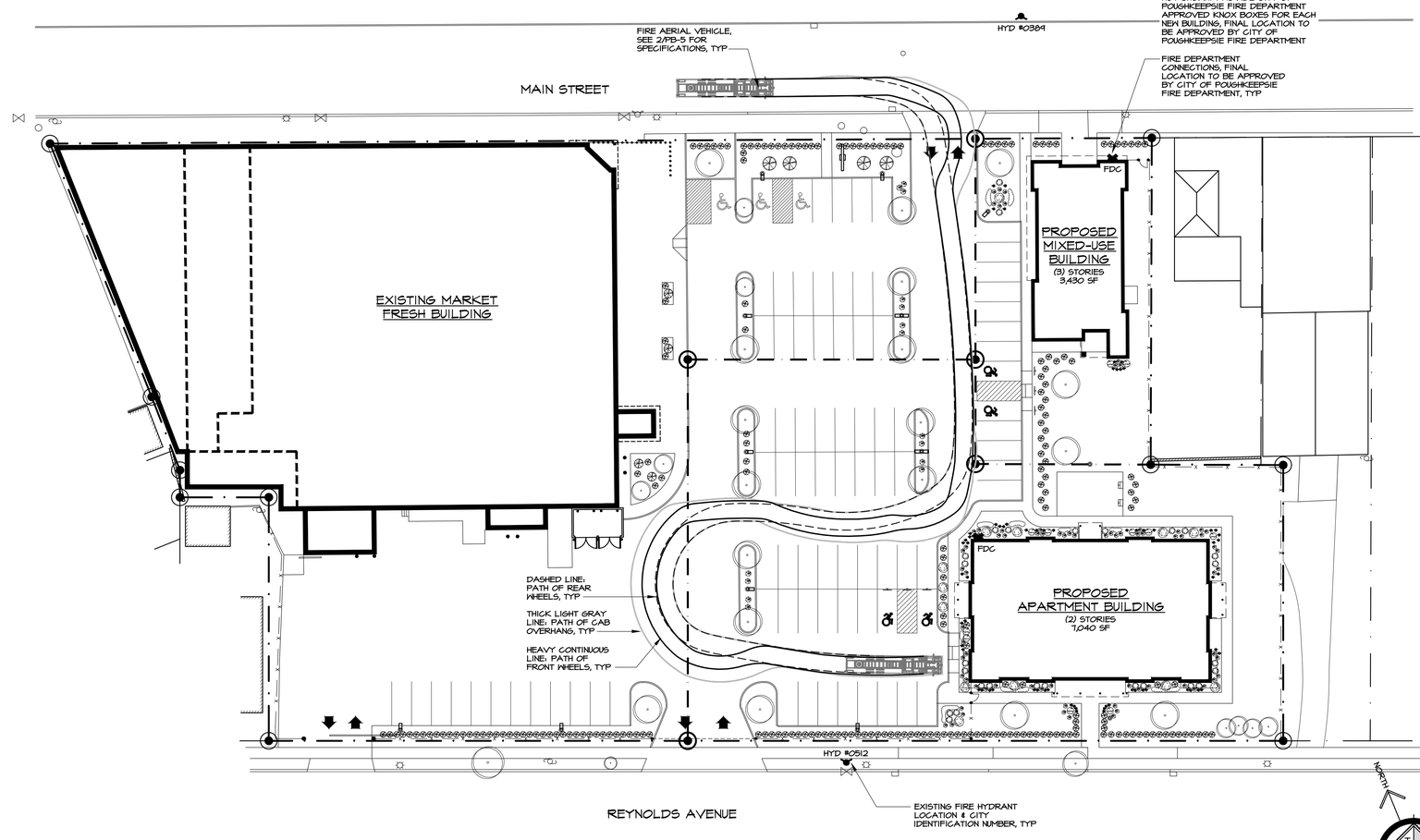

1/PB-5 PROPOSED FIRE AERIAL ACCESS PLAN

SCALE: 1" = 30'-0"

project no.
09-33.23

date
31 JAN 2024

drawn by
BP

revision date	description
03 DEC 2025	PLANNING BOARD COMMENTS

MARKET fresh

PROPOSED LOT LINE ADJUSTMENTS & COMMERCIAL/ MULTI-FAMILY DEVELOPMENT AT: 654 MAIN ST, POUGHKEEPSIE, NY

PROPOSED FIRE AERIAL ACCESS PLAN

willingham
33 Bloomingdale
Rhinebeck, New York 12572
T 845.876.2096 F 845.876.2262
www.willinghamengineering.com

MAURI ARCHITECTS PC
73 HANSON STREET POUGHKEEPSIE NY 12601 845.452.1050 mail@mauriarchitects.com

SHEET NO.
PB-5

PURSUANT TO SECTION 6415 (5) OF THE REGULATIONS OF THE COMMISSIONER OF EDUCATION UNAUTHORIZED ALTERATIONS TO THIS DOCUMENT IS A VIOLATION OF THE LAW

REGISTERED ARCHITECT MARTIN T DIESING JR 033240 STATE OF NEW YORK

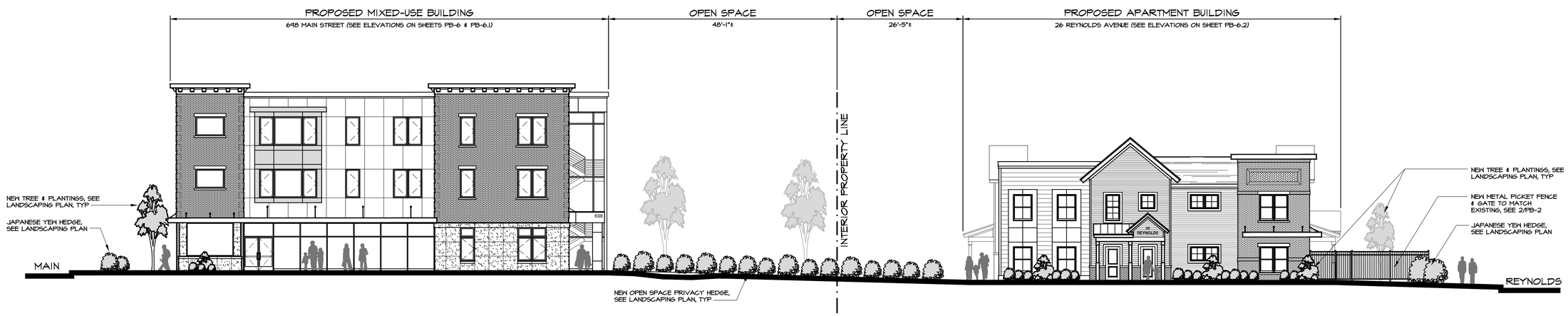

1 PB-6 **PROJECT WEST ELEVATION**
SCALE: 3/32" = 1'-0"

0 2' 8' 16' 24'

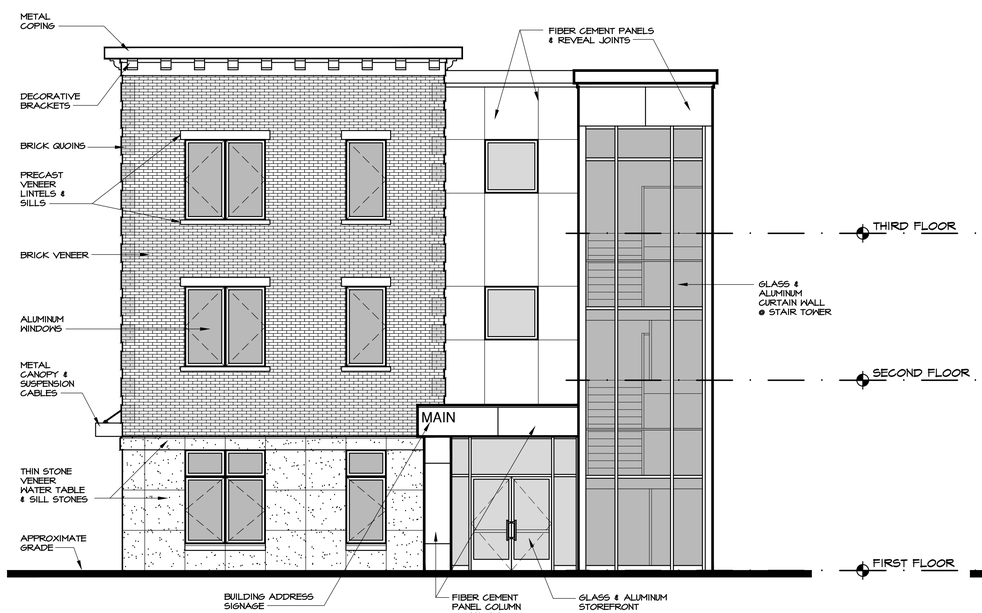

2 PB-6 **698 MAIN - SOUTH ELEVATION**
SCALE: 3/16" = 1'-0"

0 1' 2' 5' 10'

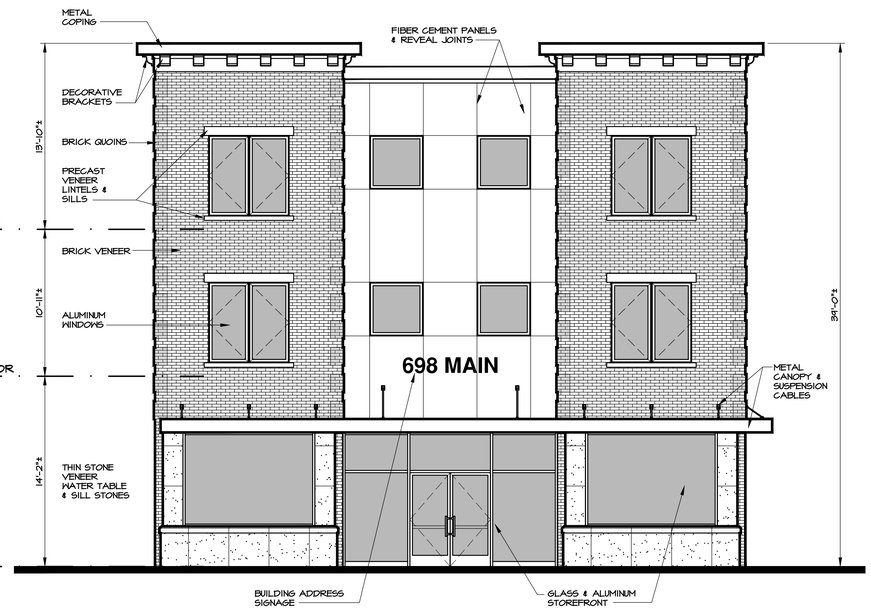

3 PB-6 **698 MAIN - NORTH ELEVATION**
SCALE: 3/16" = 1'-0"

0 1' 2' 5' 10'

project no.
09-33.23

date
31 JAN 2024

drawn by
BP

revision date	description
03 DEC 2025	PLANNING BOARD COMMENTS

MARKET fresh

PROPOSED LOT LINE ADJUSTMENTS & COMMERCIAL/ MULTI-FAMILY DEVELOPMENT AT: 654 MAIN ST, POUGHKEEPSIE, NY

PROJECT & 698 MAIN STREET ELEVATIONS

willingham engineering
313 Main Street
New Paltz, New York 12561
T 845.255.0120 F 845.255.8320
www.willinghamengineering.com

MAURI ARCHITECTS PC
73 MANSION STREET POUGHKEEPSIE NY 12601 845.452.1030 mauri-architects.com

sheet no.
PB-6

PURSUANT TO SECTION 6.9.5 (B) OF THE REGULATIONS OF THE COMMISSIONER OF EDUCATION UNAUTHORIZED ALTERATIONS TO THIS DOCUMENT IS A VIOLATION OF THE LAW

REGISTERED ARCHITECT MARTIN T DIESING III 033240 STATE OF NEW YORK

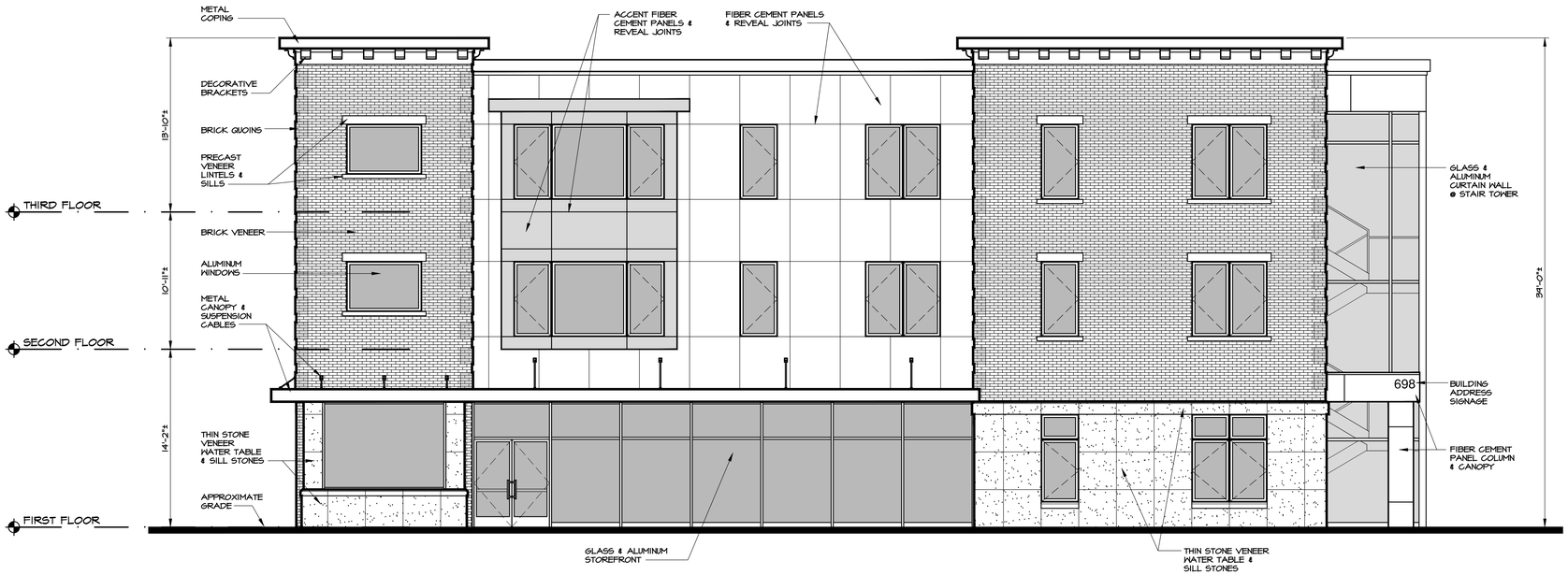

1 PB-6.1 **698 MAIN - WEST ELEVATION**

SCALE: 3/16" = 1'-0"

0 1' 2' 5' 10'

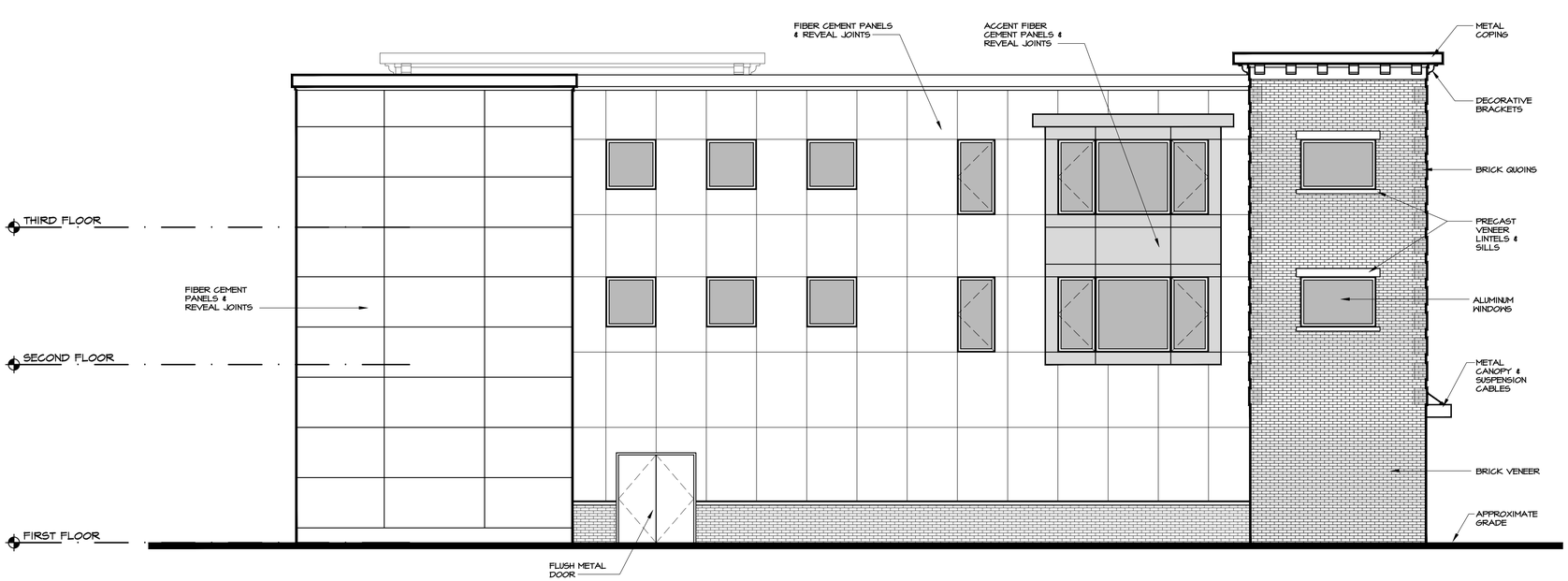

2 PB-6.1 **698 MAIN - EAST ELEVATION**

SCALE: 3/16" = 1'-0"

0 1' 2' 5' 10'

project no. 09-33.23

date 31 JAN 2024

drawn by BP

revision date	description
03 DEC 2025	PLANNING BOARD COMMENTS

MARKET fresh

PROPOSED LOT LINE ADJUSTMENTS & COMMERCIAL/ MULTI-FAMILY DEVELOPMENT AT: 654 MAIN ST, POUGHKEEPSIE, NY

698 MAIN STREET ELEVATIONS

willingham engineering
183 Main Street
New Paltz, New York 12561
T 845.255.0310 F 845.255.0310
www.willinghamengineering.com

MAURI ARCHITECTS PC
73 MANSION STREET POUGHKEEPSIE NY 12601 845.452.1030 mauri-architects.com

sheet no. PB-6.1

PURSUANT TO SECTION 6.9.5 (B) OF THE REGULATIONS OF THE COMMISSIONER OF EDUCATION UNAUTHORIZED ALTERATIONS TO THIS DOCUMENT IS A VIOLATION OF THE LAW

REGISTERED ARCHITECT MARTIN T DIESING III 033240 STATE OF NEW YORK



1 PB-6.2 **26 REYNOLDS - SOUTH ELEVATION**

SCALE: 3/16" = 1'-0"



2 PB-6.2 **26 REYNOLDS - WEST ELEVATION**

SCALE: 3/16" = 1'-0"

EAST ELEVATION SIMILAR

0 1' 2' 5' 10'

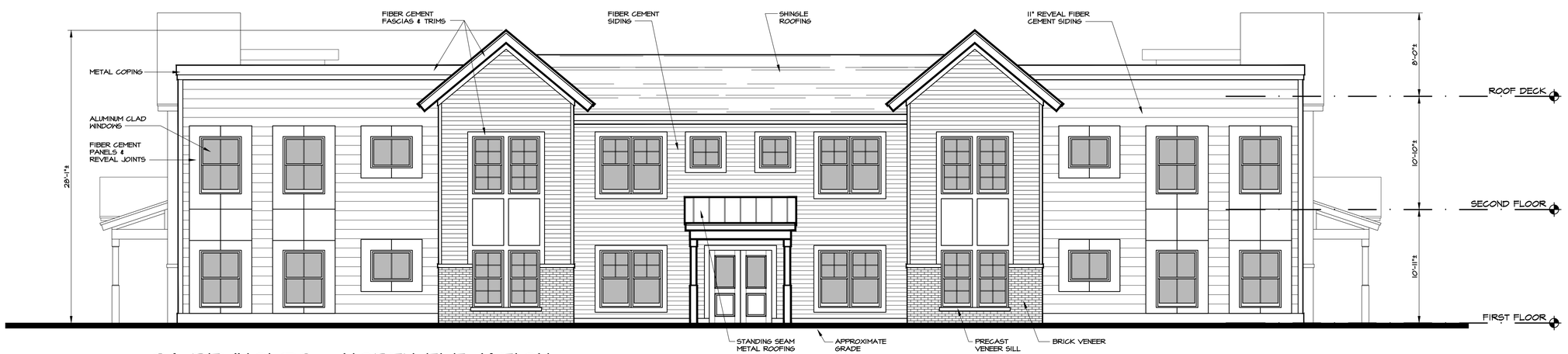

3 PB-6.2 **26 REYNOLDS - NORTH ELEVATION**

SCALE: 3/16" = 1'-0"

project no.
09-33.23

date
31 JAN 2024

drawn by
BP

revision date	description
03 DEC 2025	PLANNING BOARD COMMENTS

MARKET fresh

PROPOSED LOT LINE ADJUSTMENTS & COMMERCIAL/ MULTI-FAMILY DEVELOPMENT AT: 654 MAIN ST, POUGHKEEPSIE, NY

26 REYNOLDS AVENUE ELEVATIONS

willingham
811 Wilmington
New York, New York 10282
T 646.723.3253
www.willinghamplanning.com

MAURI ARCHITECTS PC
73 MARKET STREET POUGHKEEPSIE NY 12601 845.452.1260 mauri-architects.com

sheet no.
PB-6.2

PURSUANT TO SECTION 645 (5) OF THE REGULATIONS OF THE COMMISSIONER OF EDUCATION UNAUTHORIZED ALTERATION TO THIS DOCUMENT IS A VIOLATION OF THE LAW

REGISTERED ARCHITECT MARTIN T DIESING JR 033240 STATE OF NEW YORK

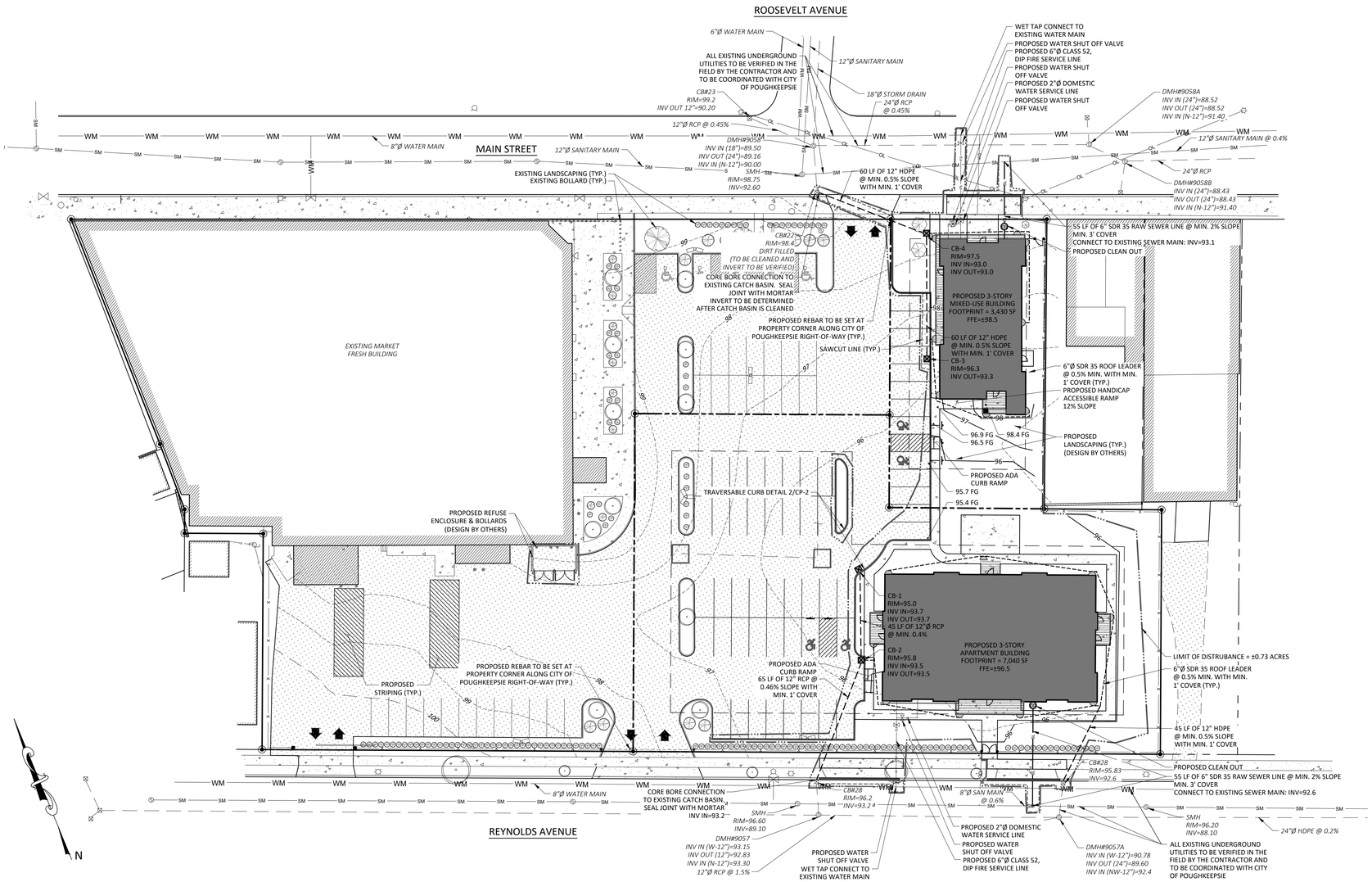

LEGEND

- EXISTING PROPERTY LINE
- ADJACENT PROPERTY LINE
- PROPOSED PROPERTY LINE
- PROPOSED PROPERTY BOUNDARY EVIDENCE
- EXISTING EDGE OF PAVEMENT
- BUILDING SETBACK
- EXISTING MAJOR CONTOUR
- EXISTING MINOR CONTOUR
- EXISTING SPOT GRADE
- UTILITY POLE & OVERHEAD LINE
- EXISTING WATER MAIN
- EXISTING LIGHT POST
- EXISTING LIGHT POST
- EXISTING DRAINAGE MANHOLE
- EXISTING DRAINAGE CULVERT
- EXISTING DRAINAGE CATCH BASIN
- EXISTING SEWER MANHOLE
- EXISTING SEWER MAIN
- EXISTING BUILDING
- EXISTING FENCE
- EXISTING CONCRETE
- EXISTING PAVEMENT TO REMAIN
- EXISTING GRAVEL
- PROPOSED BUILDING
- PROPOSED BUILDING DECK / OVERHANG
- PROPOSED CONCRETE WALK
- PROPOSED EDGE OF PAVEMENT WITH 6" CONCRETE CURB
- SAWCUT LINE
- PROPOSED MAJOR CONTOUR
- PROPOSED MINOR CONTOUR
- PROPOSED SPOT GRADE
- PROPOSED SEWER LATERAL
- PROPOSED SANITARY SEWER BACK-TO-BACK CLEAN OUT ASSEMBLY
- PROPOSED DRAINAGE CULVERT
- PROPOSED CATCH BASIN
- PROPOSED ROOF LEADER WITH 6"Ø SDR 35 DOWNSPOUT
- PROPOSED WATER SERVICE LINE
- PROPOSED FIRE SERVICE LINE
- PROPOSED WATER VALVE
- PROPOSED LIMIT OF DISTURBANCE
- PROPOSED CHAIN LINK FENCE
- PROPOSED CHAIN LINK FENCE GATE
- PROPOSED SIGN

SITE NOTE

1. BUILDING FINISHED FLOOR ELEVATIONS ARE APPROXIMATE AND WILL BE ADJUSTED AS SITE DESIGN PROGRESSES.

SURVEY NOTES

1. INVERT ELEVATIONS FOR STORM AND SANITARY SEWER STRUCTURES AND PIPE DIAMETERS ARE SHOWN PER CITY OF POUGHKEEPSIE STORM DRAINAGE IMPROVEMENTS AS PREPARED BY BLASLAND, BOUKE AND LEE, INC. AS-BUILT DRAWINGS DATED 1999. ELEVATIONS HAVE BEEN ADJUSTED TO NAVD88 DATUM PER RITE AID PHARMACY PLAN PREPARED BY CHAZEN COMPANIES DATED LAST REVISED 1/9/96, AS WELL AS SURVEY PREPARED BY HILLRIEGEL LAND SURVEYING DATED LAST REVISED 11/17/25. ALL EXISTING UTILITY LOCATIONS, DEPTHS AND SIZING MUST BE VERIFIED BY CONTRACTOR PRIOR TO CONSTRUCTION.

0 1 2 3
ORIGINAL SIZE IN INCHES

STATE OF NEW YORK
ANDREW V. WILLINGHAM
08398A
PROFESSIONAL ENGINEER

ALL RIGHTS RESERVED. COPY OR REPRODUCTION OF THIS PLAN OR ANY PORTION THEREOF, IS PROHIBITED WITHOUT THE WRITTEN PERMISSION OF THE DESIGN ENGINEER, SURVEYOR, OR ARCHITECT.

UNDER ARTICLE 145 (ENGINEERING), SECTION 7209 (2) OF THE NEW YORK STATE EDUCATION LAW, IT IS UNLAWFUL FOR ANY PERSON TO ALTER ANY ITEM ON THIS DRAWING, UNLESS ACTING UNDER THE DIRECTION OF A LICENSED PROFESSIONAL ENGINEER OR LICENSED SURVEYOR. IF ANY ITEM IS ALTERED, THE ALTERING ENGINEER AND/OR SURVEYOR SHALL AFFIX TO THE ITEM HIS SEAL AND THE NOTATION "ALTERED BY" FOLLOWED BY HIS SIGNATURE AND THE DATE OF SUCH ALTERATION, AND A SPECIFIC DESCRIPTION OF THE ALTERATION.

willingham engineering
183 Main Street
New Paltz, New York 12561
T 845.255.0210 F 845.256.8110
www.willinghamengineering.com

REV	DATE	DESCRIPTION
1	12/03/25	REVISIONS PER PLANNING BOARD

CIVIL PLAN

MARKET FRESH APARTMENTS

654 MAIN STREET

CITY OF POUGHKEEPSIE, DUTCHESS COUNTY, NEW YORK

DRAWN BY	CHECKED BY
MLT	
DATE	SCALE
01/30/24	1"=30'
PROJECT NO.	
23097	
SHEET NO.	
CP-1	

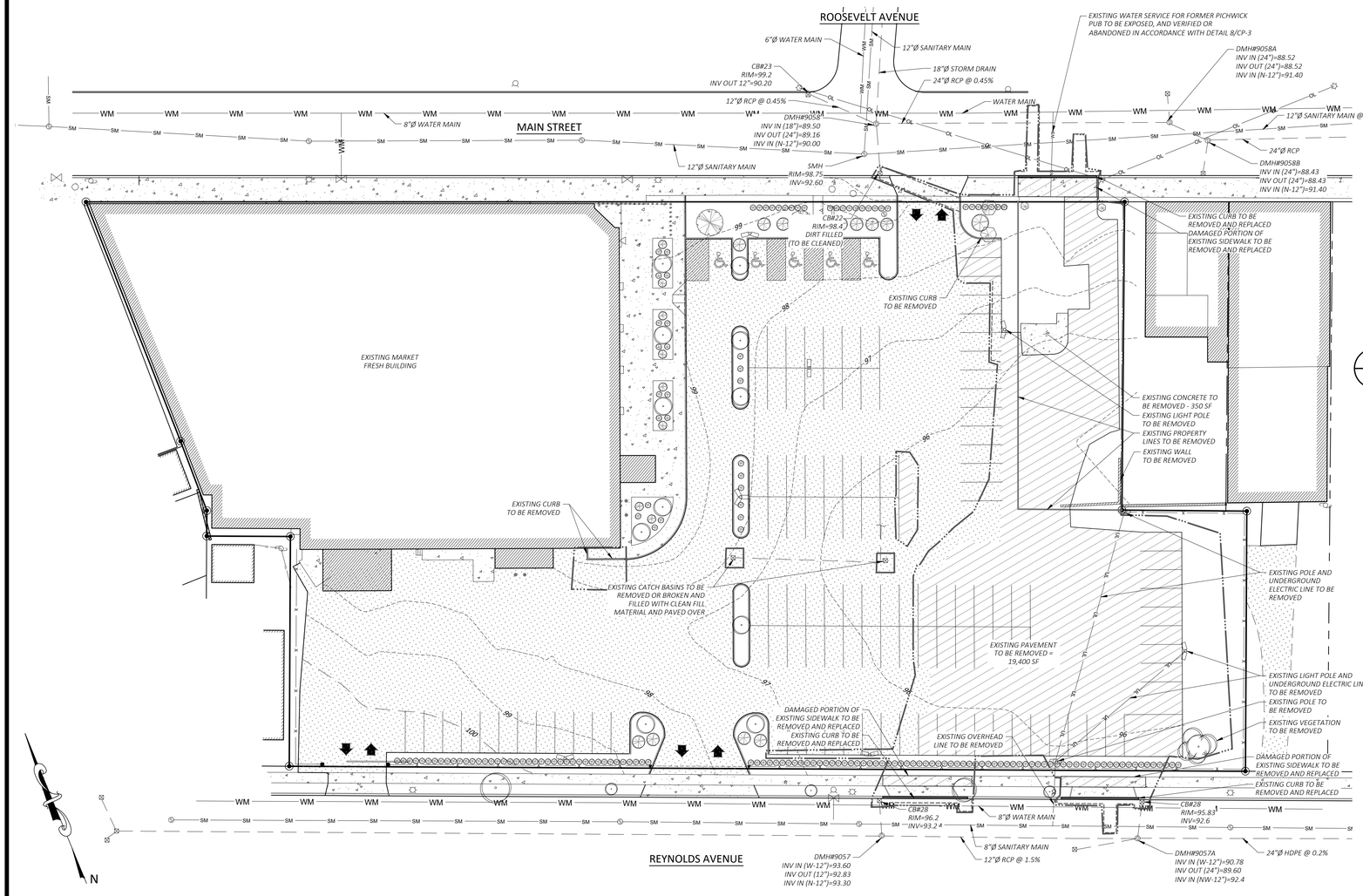

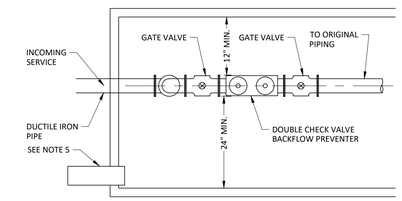

PLAN VIEW

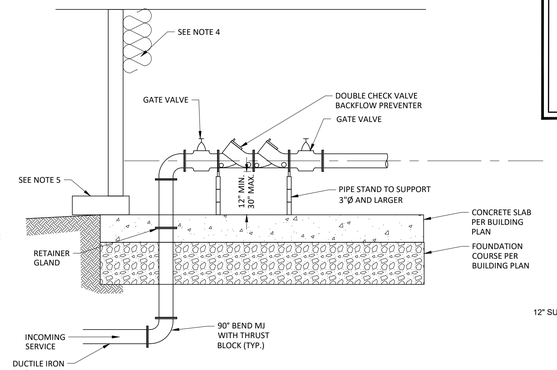

SECTION VIEW

NOTE:

1. DOUBLE CHECK VALVE BACKFLOW ASSEMBLY SHALL BE INSTALLED IN A LOCATION APPROVED BY CITY OF POUGHKEEPSIE WATER DEPARTMENT.
2. DOUBLE CHECK VALVE BACKFLOW ASSEMBLY SHALL BE INSTALLED HORIZONTAL AND PLUMB.
3. ALL CLEARANCES APPLY TO OUTSIDE, IN-BUILDING AND VAULT INSTALLATIONS.
4. INSULATE BUILDING AND/OR HAVE A HEAT SOURCE TO KEEP ENCLOSURE AT 40°.
5. ENCLOSURE SHALL HAVE A BORE SIGHTED DRAIN TO DAYLIGHT.
6. A DOOR OR OTHER APPROVED ACCESS SHALL BE PROVIDED.
7. ALL ASSEMBLIES 3" AND LARGER SHALL BE FLANGED.
8. ALL STRUCTURES MUST COMPLY WITH LOCAL BUILDING CODES.
9. FOR DOUBLE CHECK VALVE ASSEMBLY ON DOMESTIC SERVICE ONLY (NON-FIRE SERVICE) NON-RISING STEM VALVES ARE ACCEPTABLE.

1 / CP-2 **BACKFLOW PREVENTION DEVICE - GREATER THAN 2"Ø PIPE**
SCALE: N.T.S.

LEGEND

- EXISTING PROPERTY LINE
- ADJACENT PROPERTY LINE
- PROPOSED PROPERTY LINE
- EXISTING EDGE OF PAVEMENT
- BUILDING SETBACK
- 110 EXISTING MAJOR CONTOUR
- 106 EXISTING MINOR CONTOUR
- 332.8 EG EXISTING SPOT GRADE
- OL OL UTILITY POLE & OVERHEAD LINE
- WM WM EXISTING WATER MAIN
- EXISTING LIGHT POST
- EXISTING LIGHT POST
- EXISTING DRAINAGE MANHOLE
- EXISTING DRAINAGE CULVERT
- EXISTING DRAINAGE CATCH BASIN
- EXISTING SEWER MANHOLE
- SM SM EXISTING SEWER MAIN
- EXISTING BUILDING
- X X EXISTING FENCE
- EXISTING CONCRETE
- EXISTING PAVEMENT TO REMAIN
- EXISTING GRAVEL
- EXISTING PAVEMENT TO BE REMOVED
- EXISTING CONCRETE TO BE REMOVED
- SAWCUT LINE

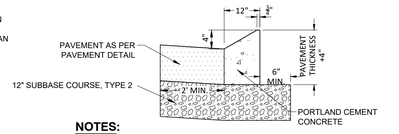

NOTES:

1. CURB SHALL BE CONSTRUCTED OF CLASS A CONCRETE
2. CONCRETE SHALL NOT BE PLACED AT ATMOSPHERIC TEMPERATURES BELOW 40°F.
3. REQUIRED MIN. AIR ENTRAINMENT SHALL BE 6%.
4. EXPANSION JOINTS SHALL BE PLACED EVERY 10'.

2 / CP-2 **TRAVERSABLE CURB**
SCALE: N.T.S.

NOTES:

1. WEIGHT: 55 LBS MAX
2. MATERIAL:
   - A) EXPANDING RING: 304 SERIES STAINLESS
   - B) PIPE HOOD: 304 SERIES STAINLESS
   - C) TOP COVER: 304 SERIES STAINLESS
   - D) HARDWARE: STAINLESS STEEL, 316 SERIES
3. FLOW AREA EXCEEDS OUTLET PIPE CROSS-SECTIONAL AREA.
4. EXPANDING RING: DESIGNED TO FIT 15" ID SMOOTH WALL PIPE.
   - MINIMUM: 14.25"
   - MAXIMUM: 15.5"
5. TYPICAL INSTALLATION
   - 5.1 PREPARE THE OUTLET PIPE
     - CLEAN THE INTERIOR OF THE OUTLET PIPE TO REMOVE DEBRIS, DIRT, AND CONTAMINANTS.
     - INSPECT THE PIPE FOR STRUCTURAL INTEGRITY TO ENSURE PROPER SEALING AND CLAMPING.
   - 5.2 INSTALL THE EXPANDING RING
     - INSERT THE EXPANDING RING INTO THE OUTLET PIPE. ENSURE IT IS POSITIONED EVENLY AROUND THE INTERIOR DIAMETER.
     - TIGHTEN THE JACKSCREW MECHANISM TO EXPAND THE RING UNTIL IT FIRMLY CLAMPS AGAINST THE INSIDE DIAMETER OF THE PIPE. AVOID OVER-TIGHTENING.
     - VERIFY THAT THE EXPANDING RING IS SECURE AND DOES NOT SHIFT UNDER MODERATE FORCE.
   - 5.3 ATTACH THE PIPE HOOD
     - ALIGN THE 4 SLOTS ON THE PIPE HOOD WITH THE THREADED BOLTS OF THE INSTALLED EXPANDING RING.
     - INSERT THE HEX NUTS WITH THE SLOT-COVER WASHERS ONTO THE BOLTS AND TIGHTEN EVENLY.
     - ACCESS THE BOLTS THROUGH THE OPEN TOP OF THE PIPE HOOD TO ENSURE ALL CONNECTIONS ARE SECURE.
   - 5.4 INSTALL THE TOP COVER
     - ALIGN THE 4 HOLES ON THE TOP COVER WITH THE THREADED STANDOFFS WELDED TO THE PIPE HOOD.
     - INSERT THE BOLTS AND TIGHTEN SECURELY.
   - 5.5 VERIFY INSTALLATION
     - INSPECT ALL COMPONENTS TO ENSURE PROPER ALIGNMENT AND SECURE ATTACHMENT.
     - INSPECT FOR ANY MINOR OPENINGS AND SEAL THEM WITH AN APPROVED WATERPROOF SEALANT IN ACCORDANCE WITH THE MANUFACTURER'S INSTRUCTIONS.

StormHood Available Sizes		Notes
Pipe Size	Part Number	
8	SHS8V-1	The StormHood is available for round inlets and for limited-access inlets through manhole openings. It is also available in aluminum for cost savings compared to the stainless steel version. Contact Fabco for customized product configurations, if needed.
10	SHS10V-1	
12	SHS12V-1	
15	SHS15V-1	
18	SHS18V-1	
24	SHS24V-1	
>24	Contact Fabco	

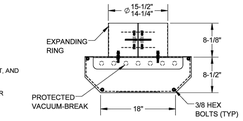

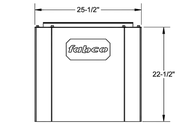

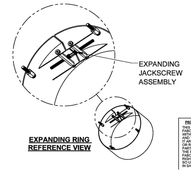

EXPANDING RING REFERENCE VIEW

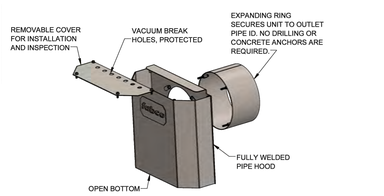

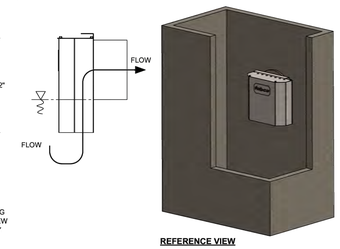

REFERENCE VIEW

NOTES:

1. HOODS TO BE INSTALLED AT PIPE OUTLET FOR ALL PROPOSED CATCH BASINS
2. FABCO STORMHOOD TO BE UTILIZED OR APPROVED EQUAL

3 / CP-2 **PROPOSED CATCH BASIN HOOD DETAIL**
SCALE: N.T.S.

PROPRIETARY AND CONFIDENTIAL
THE INFORMATION CONTAINED IN THIS DOCUMENT IS THE PROPERTY OF FABCO INDUSTRIES AND IS PROVIDED AS AN INSTRUMENT OF SERVICE. THE INFORMATION CONTAINED IN THIS DOCUMENT IS CONFIDENTIAL AND CAN NEITHER BE DISCLOSED TO ANY OTHER PARTY NOR USED FOR ANY PURPOSE WITHOUT THE EXPRESSED WRITTEN CONSENT OF FABCO INDUSTRIES. THE RECEIPT OR POSSESSION OF THIS DRAWING DOES NOT CONVEY OR IMPLY ANY RIGHTS TO REPRODUCE, DISCLOSE OR USE THE INFORMATION CONTAINED IN THIS DOCUMENT.

UNLESS OTHERWISE SPECIFIED: DIMENSIONS ARE IN INCHES. ANGULAR TOLERANCES: .XX = ±1°, .XXX = ±0.5°. DO NOT SCALE DRAWING. REMOVE ALL BURRS AND SHARP EDGES. DIMENSIONS ARE AFTER PLATING OR APPLIED FINISHES.

PROJECT: FABCO INDUSTRIES, INC. PLEASANTVILLE, NEW YORK 10570 WWW.FABCO-INDUSTRIES.COM

MATERIAL: STAINLESS STEEL

	APPROVAL	DATE
DWN	H.G.	12/4/2024
CHK		
ENG	J.P.	12/4/2024
MFG		

TOLERANCES: FRAC. ±1/16, DEC. .XX ±.05, .XXX ±.010, ANGLE ±1°

fabco — STORMHOOD, 15" PIPE

SIZE: B | DWG. NO. SHS15V-1-000 | REV: C

SCALE: NONE | SHEET 1 OF 1

ALL RIGHTS RESERVED. COPY OR REPRODUCTION OF THIS PLAN OR ANY PORTION THEREOF, IS PROHIBITED WITHOUT THE WRITTEN PERMISSION OF THE DESIGN ENGINEER, SURVEYOR, OR ARCHITECT.

UNDER ARTICLE 145 (ENGINEERING), SECTION 7209 (2) OF THE NEW YORK STATE EDUCATION LAW, IT IS UNLAWFUL FOR ANY PERSON TO ALTER ANY ITEM ON THIS DRAWING, UNLESS ACTING UNDER THE DIRECTION OF A LICENSED PROFESSIONAL ENGINEER OR LICENSED SURVEYOR. IF ANY ITEM IS ALTERED, THE ALTERING ENGINEER AND/OR SURVEYOR SHALL AFFIX TO THE ITEM HIS SEAL AND THE NOTATION "ALTERED BY" FOLLOWED BY HIS SIGNATURE AND THE DATE OF SUCH ALTERATION, AND A SPECIFIC DESCRIPTION OF THE ALTERATION.

0 1 2 3
ORIGINAL SIZE IN INCHES

STATE OF NEW YORK — ANDREW V. WILLINGHAM — 083988 — PROFESSIONAL ENGINEER

willingham engineering
183 Main Street
New Paltz, New York 12561
T 845.255.0210 F 845.256.8110
www.willinghamengineering.com

REV	DATE	DESCRIPTION
1	12/03/25	REVISIONS PER PLANNING BOARD

EXISTING CONDITIONS AND DEMOLITION PLAN

MARKET FRESH APARTMENTS

654 MAIN STREET

CITY OF POUGHKEEPSIE, DUTCHESS COUNTY, NEW YORK

DRAWN BY	CHECKED BY
MLT	
DATE	SCALE
01/30/24	1"=30'
PROJECT NO.	
23097	
SHEET NO.	
CP-2	

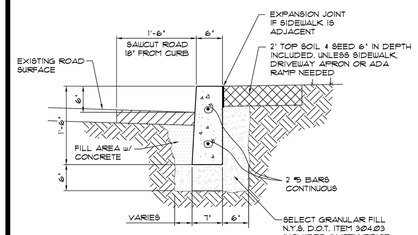

NOTE:

1. CONCRETE SHALL BE MINIMUM 4,000 PSI

1 CP-3 FORMED CURB DETAIL
SCALE: N.T.S.

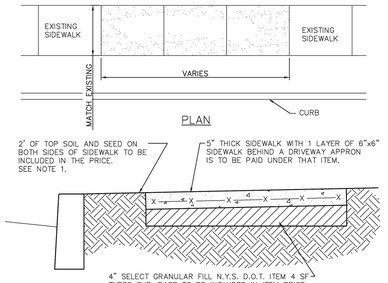

NOTES:

1. ALL CONCRETE SHALL BE MINIMUM 4,000 PSI.
2. WHERE MATERIAL IS NOT USED THE CITY OF POUGHDEEPSIE WILL BE CREDITED IN AREAS WHERE MORE THAN THE SPECIFIED AMOUNT OF MATERIAL IS USED. MAJOR GRADE CHANGES WILL BE APPROVED BY THE CITY ENGINEERING DEPT. AND WILL BE PAID UNDER APPROPRIATE ITEMS.
3. UPON COMPLETION OF CURING ALL CONCRETE SURFACES SHALL BE COATED WITH SODIUM CHLORIDE INHIBITING SEALER AS REQ'D.

2 CP-3 SIDEWALK DETAIL: REPLACE & NEW
SCALE: N.T.S.

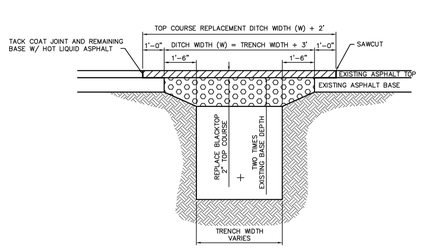

GENERAL NOTES:

DITCH WIDTH SHALL EXTEND A MINIMUM OF ONE AND ONE-HALF FT. (1 1/2') FROM THE EDGES.

REPLACED BASE MATERIAL OVER TRENCH SHALL BE TWCE THE THICKNESS OF THE BASE. (MINIMUM THICKNESS OF 8 INCHES).

BASE MATERIAL SHALL BE PLACED IN TWO OR THREE LAYERS AND EACH LAYER THOROUGHLY ROLLED OR TAMPED.

ASPHALTIC CONCRETE PAVEMENT JOINTS SHALL BE MECHANICALLY SAWED.

ALL JOINTS TO BE SQUARED TO THE EXISTING EDGE OF CURB AND/ OR PAVEMENT, AND TACK COATED PER DETAIL.

TOP COURSE SURFACE REPLACEMENT SHALL EXTEND A MINIMUM OF ONE FOOT (1') FROM THE EDGES OF THE OPEN CUT ONTO THE ROAD BASE..

TOP COURSE REPLACEMENT SHALL BE MINIMUM OF TWO INCHES (2") OF ASPHALTIC CONCRETE.

3 CP-3 FLEXIBLE PAVEMENT AND TRENCH LIMITS DETAIL
SCALE: N.T.S.

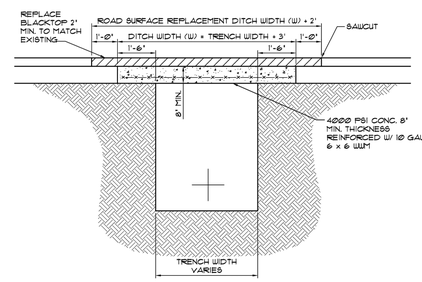

NOTE:

CONTRACTOR TO PROVIDE ALL NECESSARY PLATING TO FACILITATE CONCRETE CURING OPERATIONS

4 CP-3 RIGID PAVEMENT AND TRENCH LIMITS DETAIL
SCALE: N.T.S.

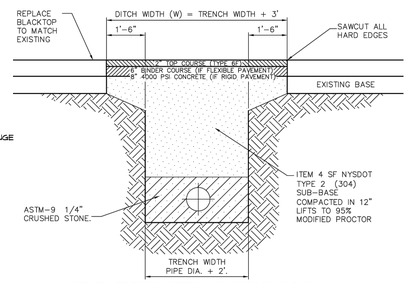

UTILITY TRENCH DETAIL IN PUBLIC R.O.W.
SCALE: 1/4" =1'-0"

NOTES:

1. DITCH WIDTH SHALL EXTEND A MINIMUM OF ONE AND ONE-HALF FT. FROM THE EDGES OF THE TRENCH.
2. REPLACED BASE MATERIAL OVER TRENCH SHALL BE ITEM 4 COMPACTED IN 12" LIFTS.
3. PIPE BEDDING SHALL BE A MINIMUM OF 6" ABOVE AND BELOW PIPE
4. ALL JOINTS SHALL BE MECHANICALLY SAWED.
5. ALL JOINTS SHALL BE SQUARED TO THE EXISTING EDGE OF CURB AND/OR PAVEMENT, AND TACK COATED PER DETAIL.
6. ROAD SURFACE REPLACEMENT SHALL BE MINIMUM OF SIX INCHES OF ASPHALIC CONCRETE.
7. BINDER COURSE ASPHALT PAVEMENT TO BE PLACED IN TWO LIFTS.

5 CP-3 TRENCH AND PAVEMENT DETAIL
SCALE: N.T.S.

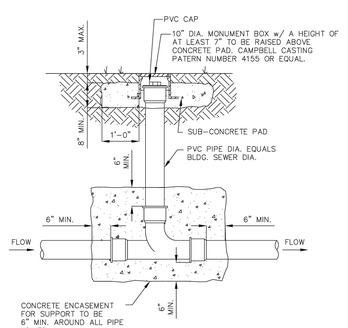

6 CP-3 RESIDENTIAL SANITARY CLEAN OUT DETAIL
SCALE: N.T.S.

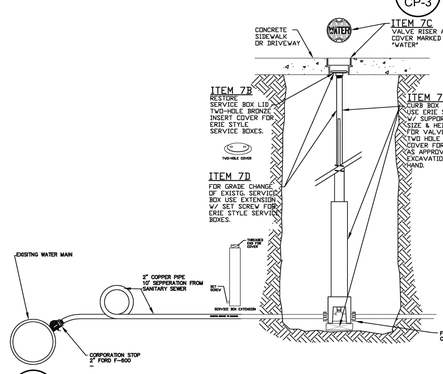

7 CP-3 CURB BOX AND WATER SERVICE CONNECTION
SCALE: N.T.S.

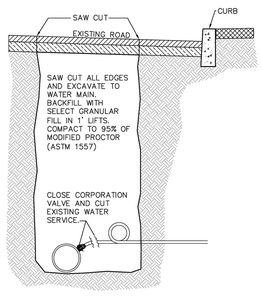

8 CP-3 WATER SERVICE DISCONNECT AT MAIN DETAIL
SCALE: N.T.S.

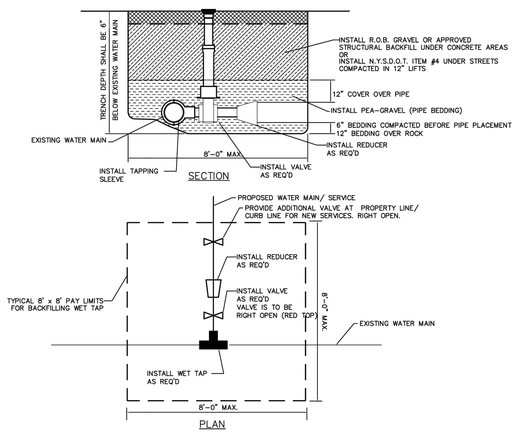

NOTE: ALL BACKFILL TO BE PLACED IN 1' LIFTS AND COMPACTED TO 95% OF MODIFIED PROCTOR (ASTM 1557)

9 CP-3 TAPPING SLEEVE & VALVE DETAIL
SCALE: N.T.S.

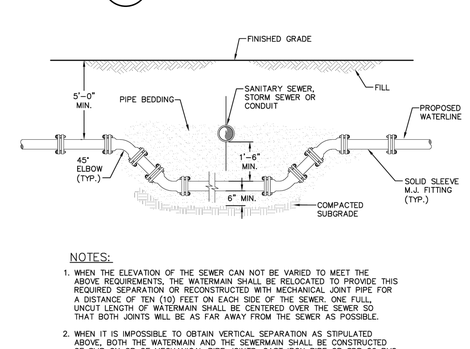

NOTES:

1. WHEN THE ELEVATION OF THE SEWER CAN NOT BE VARIED TO MEET THE ABOVE REQUIREMENTS, THE WATERMAIN SHALL BE RELOCATED TO PROVIDE THIS REQUIRED SEPARATION OR RECONSTRUCTED WITH MECHANICAL JOINT PIPE FOR A DISTANCE OF TEN (10) FEET ON EACH SIDE OF THE SEWER. ONE FULL UNCUT LENGTH OF WATERMAIN SHALL BE CENTERED OVER THE SEWER SO THAT BOTH JOINTS WILL BE AS FAR AWAY FROM THE SEWER AS POSSIBLE.
2. WHEN IT IS IMPOSSIBLE TO OBTAIN VERTICAL SEPARATION AS STIPULATED ABOVE, BOTH THE WATERMAIN AND THE SEWERMAIN SHALL BE CONSTRUCTED OF SLIP ON OR OF MECHANICAL PIPE JOINTS, CAST IRON PIPE OR SDR 26 PVC COMPLYING WITH PUBLIC WATER SUPPLY DESIGN STANDARDS OF THE AGENCY AND BE PRESSURE TESTED TO 150 PSI TO ASSURE WATER TIGHTNESS.

10 CP-3 WATERLINE OFFSET DETAIL
SCALE: N.T.S.

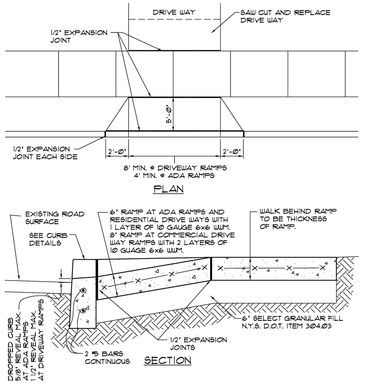

NOTES:

1. ALL CONCRETE SHALL BE MINIMUM 4,000 PSI.

11 CP-3 DRIVEWAY RAMPS & ADA RAMP DETAIL
SCALE: N.T.S.

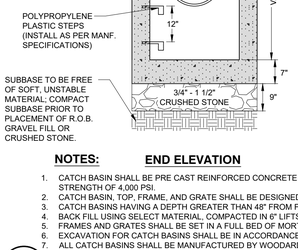

END ELEVATION

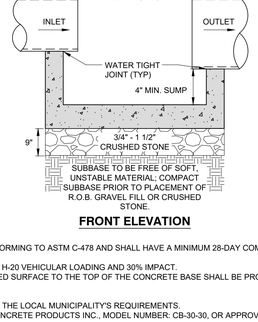

FRONT ELEVATION

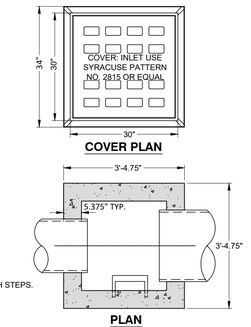

NOTES:

1. CATCH BASIN SHALL BE PRE CAST REINFORCED CONCRETE CONFORMING TO ASTM C-478 AND SHALL HAVE A MINIMUM 28-DAY COMPRESSIVE STRENGTH OF 4,000 PSI.
2. CATCH BASIN, TOP, FRAME, AND GRATE SHALL BE DESIGNED FOR H-20 VEHICULAR LOADING AND 30% IMPACT.
3. CATCH BASINS HAVING A DEPTH GREATER THAN 48" FROM FINISHED SURFACE TO THE TOP OF THE CONCRETE BASE SHALL BE PROVIDED WITH STEPS.
4. BACK FILL USING SELECT MATERIAL, COMPACTED IN 6" LIFTS.
5. FRAMES AND GRATES SHALL BE SET IN A FULL BED OF MORTAR.
6. EXCAVATION FOR CATCH BASINS SHALL BE IN ACCORDANCE WITH THE LOCAL MUNICIPALITY'S REQUIREMENTS.
7. ALL CATCH BASINS SHALL BE MANUFACTURED BY WOODARD'S CONCRETE PRODUCTS INC., MODEL NUMBER: CB-30-30, OR APPROVED EQUAL.

12 CP-3 PRECAST CATCH BASIN (30"x30")
SCALE: N.T.S.

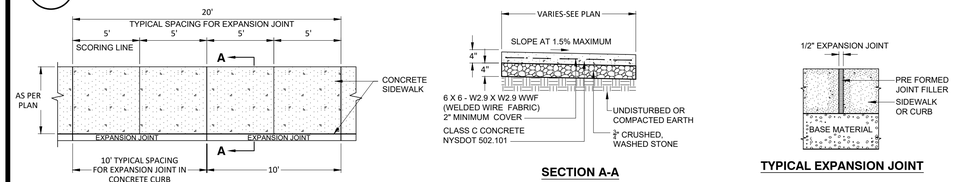

13 CP-3 SAWN JOINT DETAIL
SCALE: N.T.S.

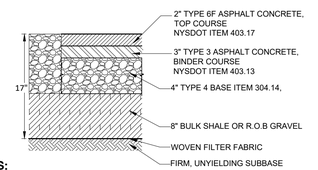

NOTES:

1. PAVEMENT CROSS SLOPE SHALL BE MIN. 1/4" PER FOOT.
2. ASPHALT EMULSION TACK COAT SHALL BE APPLIED TO ALL CONNECTIONS WITH EXISTING EDGES OF PAVEMENT @ 0.15 GALLONS PER SQUARE YARD.
3. ALL BACKFILL MATERIAL BENEATH ROAD AND SHOULDER SHALL BE COMPACTED IN MAX. 6" LIFTS
4. ALL PAVEMENT SHALL BE COMPACTED IN MAX. 3" LIFTS.
5. ALL MATERIALS SHALL BE COMPACTED TO 95% STANDARD PROCTOR DENSITY.

15 CP-3 ON-SITE PAVEMENT DETAIL
SCALE: N.T.S.

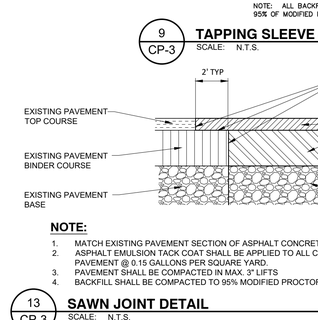

NOTE:

1. MATCH EXISTING PAVEMENT SECTION OF ASPHALT CONCRETE TOP COURSE AND BINDER COURSE.
2. ASPHALT EMULSION TACK COAT SHALL BE APPLIED TO ALL CONNECTIONS WITH EXISTING EDGES OF PAVEMENT @ 0.15 GALLONS PER SQUARE YARD.
3. PAVEMENT SHALL BE COMPACTED IN MAX. 3" LIFTS
4. BACKFILL SHALL BE COMPACTED TO 95% MODIFIED PROCTOR DENSITY IN MAX. 6" LIFTS

14 CP-3 ON-SITE CONCRETE WALKWAY DETAIL
SCALE: N.T.S.

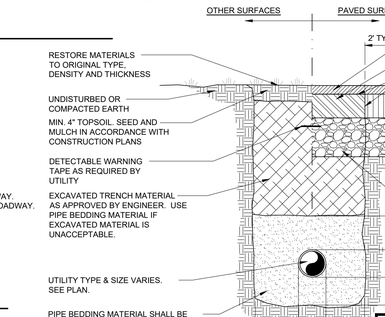

SIEVE DESIGNATION	% PASSING
2"	100
NO. 40	0-40
NO. 200	0-10

SECTION
N.T.S.

UTILITY COVER TABLE

UTILITY	COVER UNDER PAVED SURFACE	COVER UNDER OTHER SURFACE
GRAVITY SEWER	3'-0"	1'-6"
FORCE MAIN	5'-0"	5'-0"
ELECTRIC/CABLE	3'-0"	1'-6"

NOTES:

1. ALL TRENCH BACKFILL MATERIAL SHALL BE COMPACTED IN MAX. 6" LIFTS, TO 95% STANDARD PROCTOR DENSITY.
2. REMOVE ALL NONDURABLE PARTICLES, ORGANIC MATTER AND STONES LARGER THEN 1.5"Ø FROM BACKFILL.
3. BOTTOM OF TRENCH WILL BE FLAT AND LEVEL WITH NO LARGE STONES OR UNSTABLE SOILS PRESENT.
4. IF A PAVEMENT JOINT EXISTS WITHIN 3' OF SAW CUT, PAVEMENT SHALL BE REMOVED TO EXISTING JOINT.
5. TACK COAT SHALL BE APPLIED TO ALL EXPOSED EDGES OF PAVEMENT AND BETWEEN EVERY LIFT.
6. ALL PAVEMENT WILL BE COMPACTED IN MAX. 3" LIFTS USING A 10 TON, VIBRATORY ROLLER.
7. ALL SANITARY SEWER FORCE MAINS SHALL BE MINIMUM SDR 21 PIPE.
8. ALL GRAVITY SEWER LINES SHALL BE MINIMUM SDR 35 PIPE.
10. ALL DISTURBED AREAS TO BE STABILIZED WITHIN THREE (3) DAYS OF DISTURBANCE.
11. TRENCHING SHALL BE IMPLEMENTED IN ACCORDANCE WITH O.S.H.A. STANDARDS.
12. ALL UNDERGROUND UTILITY INSTALLATIONS SHALL MEET SPECIFICATIONS PER JURISDICTIONAL UTILITY COMPANY.
13. TRENCH SPECIFICATIONS SHALL BE SUBJECT TO CHANGE PER SPECIFIC SITE DESIGN CONSIDERATIONS.

16 CP-3 ON-SITE UTILITY TRENCH DETAIL
SCALE: N.T.S.

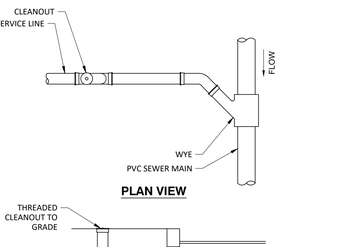

NOTES:

1. INSTALL FOUNDATION AND BACKFILL AS PER PIPE BEDDING AND BACKFILL DETAIL.
2. WHEN INSTALLING A NEW LATERAL TO AN EXISTING SEWER, INSTALL SADDLE IN PLACE OF WYE FITTING. CUT EXISTING SEWER, REMOVE CUTOUT, INSTALL MANUFACTURER'S GASKET, SECURE SADDLE TO MAIN WITH TWO STAINLESS STRAPS.

17 CP-3 SANITARY SEWER LATERAL SERVICE CONNECTION
SCALE: N.T.S.

0 1 2 3
ORIGINAL SIZE IN INCHES

STATE OF NEW YORK ANDREW V. WILLINGHAM 083998 PROFESSIONAL ENGINEER

ALL RIGHTS RESERVED. COPY OR REPRODUCTION OF THIS PLAN OR ANY PORTION THEREOF, IS PROHIBITED WITHOUT THE WRITTEN PERMISSION OF THE DESIGN ENGINEER, SURVEYOR, OR ARCHITECT.

UNDER ARTICLE 145 (ENGINEERING), SECTION 7209 (2) OF THE NEW YORK STATE EDUCATION LAW, IT IS UNLAWFUL FOR ANY PERSON TO ALTER ANY ITEM ON THIS DRAWING, UNLESS ACTING UNDER THE DIRECTION OF A LICENSED PROFESSIONAL ENGINEER OR LICENSED SURVEYOR. IF ANY ITEM IS ALTERED, THE ALTERING ENGINEER AND/OR SURVEYOR SHALL AFFIX TO THE ITEM HIS SEAL AND THE NOTATION "ALTERED BY" FOLLOWED BY HIS SIGNATURE AND THE DATE OF SUCH ALTERATION, AND A SPECIFIC DESCRIPTION OF THE ALTERATION.

willingham engineering
183 Main Street
New Paltz, New York 12561
T 845.255.0210 F 845.256.8110
www.willinghamengineering.com

REV	DATE	DESCRIPTION
1	12/03/25	REVISIONS PER PLANNING BOARD

SITE DETAILS

MARKET FRESH APARTMENTS

654 MAIN STREET

CITY OF POUGHKEEPSIE, DUTCHESS COUNTY, NEW YORK

DRAWN BY	CHECKED BY
MLT	
DATE	SCALE
01/30/24	AS NOTED
PROJECT NO.	
23097	
SHEET NO.	
CP-3	

Instructions for Completing Part 1

Part 1 is to be completed by the applicant or project sponsor. Responses become part of the application for approval or funding, are subject to public review, and may be subject to further verification.

Complete Part 1 based on information currently available. If additional research or investigation would be needed to fully respond to any item, please answer as thoroughly as possible based on current information; indicate whether missing information does not exist, or is not reasonably available to the sponsor; and, when possible, generally describe work or studies which would be necessary to update or fully develop that information.

Applicants/sponsors must complete all items in Sections A & B. In Sections C, D & E, most items contain an initial question that must be answered either "Yes" or "No". If the answer to the initial question is "Yes", complete the sub-questions that follow. If the answer to the initial question is "No", proceed to the next question. Section F allows the project sponsor to identify and attach any additional information. Section G requires the name and signature of the applicant or project sponsor to verify that the information contained in Part 1is accurate and complete.

A. Project and Applicant/Sponsor Information.

Name of Action or Project: Proposed Lot Line Adjustments & Commercial / Multi-Family Development at: 654 Main Street		
Project Location (describe, and attach a general location map): 654 & 698 Main Street, Poughkeepsie, NY 12601		
Brief Description of Proposed Action (include purpose or need): Construction of a new three story mixed-use building on Main Street with ground level retail space and seven apartment units. Construction of a second three story building facing Reynolds Avenue containing twenty-eight apartment units. The project will be developed mostly within an existing under-utilized parking lot for an existing on-site grocery store which will remain. The proposal also includes new lighting, landscaping and parking area improvements. Several parcels will be combined and reconfigured into three new parcels, one each for the existing grocery store, Main Street mixed-use building and the Reynolds Avenue multi-family building.		
Name of Applicant/Sponsor: Jay Diesing, RA AIA - Mauri Architects PC	Telephone: (845) 452-1030 E-Mail: jay@mauri-architects.com	
Address: 73 Mansion Street		
City/PO: Poughkeepsie	State: NY	Zip Code: 12601
Project Contact (if not same as sponsor; give name and title/role): Same as Applicant	Telephone: E-Mail:	
Address:		
City/PO:	State:	Zip Code:
Property Owner (if not same as sponsor): EFDS Realy Corp	Telephone: (646) 358-9089 E-Mail: bardof18@yahoo.com	
Address: PO Box 868		
City/PO: Newburgh	State: NY	Zip Code: 12551

B. Government Approvals

B. Government Approvals, Funding, or Sponsorship. ("Funding" includes grants, loans, tax relief, and any other forms of financial assistance.)

Government Entity	If Yes: Identify Agency and Approval(s) Required	Application Date (Actual or projected)
a. City Counsel, Town Board, or Village Board of Trustees ☐Yes ☑No		
b. City, Town or Village Planning Board or Commission ☑Yes ☐No	City Planning Board - Site Plan, Special Permit & Facade Approvals	January 2024
c. City, Town or Village Zoning Board of Appeals ☑Yes ☐No	City Zoning Board of Appeals - Parking & Area Variances	TBD
d. Other local agencies ☑Yes ☐No	City Building Department - Building Permit	TBD
e. County agencies ☑Yes ☐No	Dutchess County Planning	
f. Regional agencies ☐Yes ☐No		
g. State agencies ☐Yes ☑No		
h. Federal agencies ☐Yes ☑No		

i. Coastal Resources.

i. Is the project site within a Coastal Area, or the waterfront area of a Designated Inland Waterway? ☐Yes ☑No

ii. Is the project site located in a community with an approved Local Waterfront Revitalization Program? ☐Yes ☑No

iii. Is the project site within a Coastal Erosion Hazard Area? ☐Yes ☑No

C. Planning and Zoning

C.1. Planning and zoning actions.

Will administrative or legislative adoption, or amendment of a plan, local law, ordinance, rule or regulation be the only approval(s) which must be granted to enable the proposed action to proceed? ☐Yes ☑No

- **If Yes,** complete sections C, F and G.
- **If No,** proceed to question C.2 and complete all remaining sections and questions in Part 1

C.2. Adopted land use plans.

a. Do any municipally- adopted (city, town, village or county) comprehensive land use plan(s) include the site where the proposed action would be located? ☑Yes ☐No

If Yes, does the comprehensive plan include specific recommendations for the site where the proposed action would be located? ☐Yes ☑No

b. Is the site of the proposed action within any local or regional special planning district (for example: Greenway; Brownfield Opportunity Area (BOA); designated State or Federal heritage area; watershed management plan; or other?) ☐Yes ☑No

If Yes, identify the plan(s):

_____

_____

_____

c. Is the proposed action located wholly or partially within an area listed in an adopted municipal open space plan, or an adopted municipal farmland protection plan? ☐Yes ☑No

If Yes, identify the plan(s):

_____

_____

_____

C.3. Zoning

a. Is the site of the proposed action located in a municipality with an adopted zoning law or ordinance. ☑ Yes ☐ No
If Yes, what is the zoning classification(s) including any applicable overlay district?
C-2A (Main Street Commercial) & R-4 (Medium High-Density Residence)

b. Is the use permitted or allowed by a special or conditional use permit? ☑ Yes ☐ No

c. Is a zoning change requested as part of the proposed action? ☐ Yes ☑ No
If Yes,
i. What is the proposed new zoning for the site? _____

C.4. Existing community services.

a. In what school district is the project site located? City of Poughkeepsie

b. What police or other public protection forces serve the project site?
City of Poughkeepsie Police

c. Which fire protection and emergency medical services serve the project site?
City of Poughkeepsie Fire Department

d. What parks serve the project site?
King Street & Bartlett Parks

D. Project Details

D.1. Proposed and Potential Development

a. What is the general nature of the proposed action (e.g., residential, industrial, commercial, recreational; if mixed, include all components)? Commercial and residential.

b. a. Total acreage of the site of the proposed action? 2.92 +/- acres
b. Total acreage to be physically disturbed? 0.65 +/- acres
c. Total acreage (project site and any contiguous properties) owned or controlled by the applicant or project sponsor? 2.92 +/- acres

c. Is the proposed action an expansion of an existing project or use? ☐ Yes ☑ No
i. If Yes, what is the approximate percentage of the proposed expansion and identify the units (e.g., acres, miles, housing units, square feet)? % _____ Units: _____

d. Is the proposed action a subdivision, or does it include a subdivision? ☑ Yes ☐ No
If Yes,
i. Purpose or type of subdivision? (e.g., residential, industrial, commercial; if mixed, specify types)
Mixed: Commercial and residential apartments.
ii. Is a cluster/conservation layout proposed? ☐ Yes ☑ No
iii. Number of lots proposed? 3
iv. Minimum and maximum proposed lot sizes? Minimum 11,795 +/- sf Maximum 75,555 +/- sf

e. Will the proposed action be constructed in multiple phases? ☐ Yes ☑ No
i. If No, anticipated period of construction: 18 months
ii. If Yes:
- Total number of phases anticipated _____
- Anticipated commencement date of phase 1 (including demolition) _____ month _____ year
- Anticipated completion date of final phase _____ month _____year
- Generally describe connections or relationships among phases, including any contingencies where progress of one phase may determine timing or duration of future phases: _____

f. Does the project include new residential uses? ☑ Yes ☐ No

If Yes, show numbers of units proposed.

	One Family	Two Family	Three Family	Multiple Family (four or more)
Initial Phase	0	0	0	35 Units (See Plans for Types)
At completion of all phases	0	0	0	35 Units (See Plans for Types)

g. Does the proposed action include new non-residential construction (including expansions)? ☑ Yes ☐ No

If Yes,

i. Total number of structures 1 (Portion of First Floor of Mixed-Use Building)

ii. Dimensions (in feet) of largest proposed structure: 40 height; 44'-0" width; and 82'-0" length

iii. Approximate extent of building space to be heated or cooled: 2,200 +/- square feet (Commercial Area Only)

h. Does the proposed action include construction or other activities that will result in the impoundment of any liquids, such as creation of a water supply, reservoir, pond, lake, waste lagoon or other storage? ☐ Yes ☑ No

If Yes,

i. Purpose of the impoundment: _____

ii. If a water impoundment, the principal source of the water: ☐ Ground water ☐ Surface water streams ☐ Other specify:

_____

iii. If other than water, identify the type of impounded/contained liquids and their source.

_____

iv. Approximate size of the proposed impoundment. Volume: _____ million gallons; surface area: _____ acres

v. Dimensions of the proposed dam or impounding structure: _____ height; _____ length

vi. Construction method/materials for the proposed dam or impounding structure (e.g., earth fill, rock, wood, concrete):

_____

D.2. Project Operations

a. Does the proposed action include any excavation, mining, or dredging, during construction, operations, or both? ☑ Yes ☐ No
(Not including general site preparation, grading or installation of utilities or foundations where all excavated materials will remain onsite)

If Yes:

i. What is the purpose of the excavation or dredging? Excavation for building foundation elements.

ii. How much material (including rock, earth, sediments, etc.) is proposed to be removed from the site?

- Volume (specify tons or cubic yards): 900 cubic yards
- Over what duration of time? 3-6 months

iii. Describe nature and characteristics of materials to be excavated or dredged, and plans to use, manage or dispose of them.

Excavations will be used as fill material for building foundations and regarding of yard areas to the maximum extent possible.

iv. Will there be onsite dewatering or processing of excavated materials? ☐ Yes ☑ No

If yes, describe. _____

v. What is the total area to be dredged or excavated? 0.25 +/- acres

vi. What is the maximum area to be worked at any one time? 0.16 acres

vii. What would be the maximum depth of excavation or dredging? 5 feet

viii. Will the excavation require blasting? ☐ Yes ☑ No

ix. Summarize site reclamation goals and plan:

N/A

b. Would the proposed action cause or result in alteration of, increase or decrease in size of, or encroachment into any existing wetland, waterbody, shoreline, beach or adjacent area? ☐ Yes ☑ No

If Yes:

i. Identify the wetland or waterbody which would be affected (by name, water index number, wetland map number or geographic description): _____

ii. Describe how the proposed action would affect that waterbody or wetland, e.g. excavation, fill, placement of structures, or alteration of channels, banks and shorelines. Indicate extent of activities, alterations and additions in square feet or acres:

_____

_____

_____

_____

iii. Will the proposed action cause or result in disturbance to bottom sediments? ☐Yes ☐No

If Yes, describe: _____

iv. Will the proposed action cause or result in the destruction or removal of aquatic vegetation? ☐Yes ☐No

If Yes:

- acres of aquatic vegetation proposed to be removed: _____
- expected acreage of aquatic vegetation remaining after project completion: _____
- purpose of proposed removal (e.g. beach clearing, invasive species control, boat access): _____

_____

- proposed method of plant removal: _____
- if chemical/herbicide treatment will be used, specify product(s): _____

v. Describe any proposed reclamation/mitigation following disturbance: _____

_____

c. Will the proposed action use, or create a new demand for water? ☑Yes ☐No

If Yes:

i. Total anticipated water usage/demand per day: 4,300 gallons/day

ii. Will the proposed action obtain water from an existing public water supply? ☑Yes ☐No

If Yes:

- Name of district or service area: Poughkeepsie Joint Water Board
- Does the existing public water supply have capacity to serve the proposal? ☑Yes ☐No
- Is the project site in the existing district? ☑Yes ☐No
- Is expansion of the district needed? ☐Yes ☑No
- Do existing lines serve the project site? ☑Yes ☐No

iii. Will line extension within an existing district be necessary to supply the project? ☐Yes ☑No

If Yes:

- Describe extensions or capacity expansions proposed to serve this project: _____

_____

- Source(s) of supply for the district: _____

iv. Is a new water supply district or service area proposed to be formed to serve the project site? ☐ Yes ☑No

If, Yes:

- Applicant/sponsor for new district: _____
- Date application submitted or anticipated: _____
- Proposed source(s) of supply for new district: _____

v. If a public water supply will not be used, describe plans to provide water supply for the project: _____

_____

vi. If water supply will be from wells (public or private), what is the maximum pumping capacity: _____ gallons/minute.

d. Will the proposed action generate liquid wastes? ☑Yes ☐No

If Yes:

i. Total anticipated liquid waste generation per day: 4,300 gallons/day

ii. Nature of liquid wastes to be generated (e.g., sanitary wastewater, industrial; if combination, describe all components and approximate volumes or proportions of each): _____

Sanitary wastewater

_____

iii. Will the proposed action use any existing public wastewater treatment facilities? ☑Yes ☐No

If Yes:

- Name of wastewater treatment plant to be used: Poughkeepsie Sewer Plan
- Name of district: Poughkeepsie Joint District
- Does the existing wastewater treatment plant have capacity to serve the project? ☑Yes ☐No
- Is the project site in the existing district? ☑Yes ☐No
- Is expansion of the district needed? ☐Yes ☑No

- Do existing sewer lines serve the project site? ☑ Yes ☐ No
- Will a line extension within an existing district be necessary to serve the project? ☐ Yes ☑ No

If Yes:

- Describe extensions or capacity expansions proposed to serve this project: _____

_____

_____

iv. Will a new wastewater (sewage) treatment district be formed to serve the project site? ☐ Yes ☑ No

If Yes:

- Applicant/sponsor for new district: _____
- Date application submitted or anticipated: _____
- What is the receiving water for the wastewater discharge? _____

v. If public facilities will not be used, describe plans to provide wastewater treatment for the project, including specifying proposed receiving water (name and classification if surface discharge or describe subsurface disposal plans):

_____

_____

vi. Describe any plans or designs to capture, recycle or reuse liquid waste: _____

_____

_____

e. Will the proposed action disturb more than one acre and create stormwater runoff, either from new point sources (i.e. ditches, pipes, swales, curbs, gutters or other concentrated flows of stormwater) or non-point source (i.e. sheet flow) during construction or post construction? ☐ Yes ☑ No

If Yes:

i. How much impervious surface will the project create in relation to total size of project parcel?

_____ Square feet or _____ acres (impervious surface)

_____ Square feet or _____ acres (parcel size)

ii. Describe types of new point sources. _____

_____

iii. Where will the stormwater runoff be directed (i.e. on-site stormwater management facility/structures, adjacent properties, groundwater, on-site surface water or off-site surface waters)?

_____

_____

- If to surface waters, identify receiving water bodies or wetlands: _____

_____

_____

- Will stormwater runoff flow to adjacent properties? ☐ Yes ☐ No

iv. Does the proposed plan minimize impervious surfaces, use pervious materials or collect and re-use stormwater? ☐ Yes ☐ No

f. Does the proposed action include, or will it use on-site, one or more sources of air emissions, including fuel combustion, waste incineration, or other processes or operations? ☐ Yes ☑ No

If Yes, identify:

i. Mobile sources during project operations (e.g., heavy equipment, fleet or delivery vehicles)

_____

ii. Stationary sources during construction (e.g., power generation, structural heating, batch plant, crushers)

_____

iii. Stationary sources during operations (e.g., process emissions, large boilers, electric generation)

_____

g. Will any air emission sources named in D.2.f (above), require a NY State Air Registration, Air Facility Permit, or Federal Clean Air Act Title IV or Title V Permit? ☐ Yes ☑ No

If Yes:

i. Is the project site located in an Air quality non-attainment area? (Area routinely or periodically fails to meet ambient air quality standards for all or some parts of the year) ☐ Yes ☐ No

ii. In addition to emissions as calculated in the application, the project will generate:

- _____Tons/year (short tons) of Carbon Dioxide (CO_2)
- _____Tons/year (short tons) of Nitrous Oxide (N_2O)
- _____Tons/year (short tons) of Perfluorocarbons (PFCs)
- _____Tons/year (short tons) of Sulfur Hexafluoride (SF_6)
- _____Tons/year (short tons) of Carbon Dioxide equivalent of Hydroflourocarbons (HFCs)
- _____Tons/year (short tons) of Hazardous Air Pollutants (HAPs)

h. Will the proposed action generate or emit methane (including, but not limited to, sewage treatment plants, landfills, composting facilities)? ☐Yes ☑No

If Yes:

i. Estimate methane generation in tons/year (metric): _____

ii. Describe any methane capture, control or elimination measures included in project design (e.g., combustion to generate heat or electricity, flaring): _____

i. Will the proposed action result in the release of air pollutants from open-air operations or processes, such as quarry or landfill operations? ☐Yes ☑No

If Yes: Describe operations and nature of emissions (e.g., diesel exhaust, rock particulates/dust):

j. Will the proposed action result in a substantial increase in traffic above present levels or generate substantial new demand for transportation facilities or services? ☐Yes ☑No

If Yes:

i. When is the peak traffic expected (Check all that apply): ☐ Morning ☐ Evening ☐Weekend ☐ Randomly between hours of _____ to _____.

ii. For commercial activities only, projected number of truck trips/day and type (e.g., semi trailers and dump trucks): _____

iii. Parking spaces: Existing _____ Proposed _____ Net increase/decrease _____

iv. Does the proposed action include any shared use parking? ☐Yes ☐No

v. If the proposed action includes any modification of existing roads, creation of new roads or change in existing access, describe:
N/A

vi. Are public/private transportation service(s) or facilities available within ½ mile of the proposed site? ☐Yes ☐No

vii Will the proposed action include access to public transportation or accommodations for use of hybrid, electric or other alternative fueled vehicles? ☐Yes ☐No

viii. Will the proposed action include plans for pedestrian or bicycle accommodations for connections to existing pedestrian or bicycle routes? ☐Yes ☐No

k. Will the proposed action (for commercial or industrial projects only) generate new or additional demand for energy? ☑Yes ☐No

If Yes:

i. Estimate annual electricity demand during operation of the proposed action:
420,000 kWH

ii. Anticipated sources/suppliers of electricity for the project (e.g., on-site combustion, on-site renewable, via grid/local utility, or other):
Local grid / utility company - Central Hudson Gas & Electric Corp.

iii. Will the proposed action require a new, or an upgrade, to an existing substation? ☐Yes ☑No

l. Hours of operation. Answer all items which apply.

i. During Construction:

- Monday - Friday: 7:00am - 6:00pm
- Saturday: 7:00am - 6:00pm
- Sunday: N/A
- Holidays: N/A

ii. During Operations:

- Monday - Friday: TBD
- Saturday: TBD
- Sunday: TBD
- Holidays: TBD

m. Will the proposed action produce noise that will exceed existing ambient noise levels during construction, operation, or both? ☑ Yes ☐ No

If yes:

i. Provide details including sources, time of day and duration:

Construction vehicles and equipment during construction hours of construction operations to confirm with the City Noise Ordinance.

ii. Will the proposed action remove existing natural barriers that could act as a noise barrier or screen? ☐ Yes ☑ No

Describe: _____

n. Will the proposed action have outdoor lighting? ☑ Yes ☐ No

If yes:

i. Describe source(s), location(s), height of fixture(s), direction/aim, and proximity to nearest occupied structures:

A mixture of pole, wall and soffit mounted fixtures, fixture heights vary between 10'-0" and 18'-0". Refer to lighting plans for additional details.

ii. Will proposed action remove existing natural barriers that could act as a light barrier or screen? ☐ Yes ☑ No

Describe: _____

o. Does the proposed action have the potential to produce odors for more than one hour per day? ☐ Yes ☑ No

If Yes, describe possible sources, potential frequency and duration of odor emissions, and proximity to nearest occupied structures: _____

p. Will the proposed action include any bulk storage of petroleum (combined capacity of over 1,100 gallons) or chemical products 185 gallons in above ground storage or any amount in underground storage? ☐ Yes ☑ No

If Yes:

i. Product(s) to be stored _____

ii. Volume(s) _____ per unit time _____ (e.g., month, year)

iii. Generally, describe the proposed storage facilities: _____

q. Will the proposed action (commercial, industrial and recreational projects only) use pesticides (i.e., herbicides, insecticides) during construction or operation? ☐ Yes ☑ No

If Yes:

i. Describe proposed treatment(s):

ii. Will the proposed action use Integrated Pest Management Practices? ☐ Yes ☐ No

r. Will the proposed action (commercial or industrial projects only) involve or require the management or disposal of solid waste (excluding hazardous materials)? ☑ Yes ☐ No

If Yes:

i. Describe any solid waste(s) to be generated during construction or operation of the facility:

- Construction: 5 +/- tons per week (unit of time)
- Operation : 4 +/- tons per month (unit of time)

ii. Describe any proposals for on-site minimization, recycling or reuse of materials to avoid disposal as solid waste:

- Construction: Recycling of applicable packaging and construction materials.
- Operation: Apartment unit residents will be provided recycling collection for applicable household packaging waste.

iii. Proposed disposal methods/facilities for solid waste generated on-site:

- Construction: Collected in temporary roll-off dumpster and removed off-site by local refuse company.
- Operation: Collected and stored in new dumpster refuse area and removed off-site by local refuse company.

s. Does the proposed action include construction or modification of a solid waste management facility? ☐ Yes ☑ No

If Yes:

i. Type of management or handling of waste proposed for the site (e.g., recycling or transfer station, composting, landfill, or other disposal activities): _____

ii. Anticipated rate of disposal/processing:

- _____ Tons/month, if transfer or other non-combustion/thermal treatment, or
- _____ Tons/hour, if combustion or thermal treatment

iii. If landfill, anticipated site life: _____ years

t. Will the proposed action at the site involve the commercial generation, treatment, storage, or disposal of hazardous waste? ☐ Yes ☑ No

If Yes:

i. Name(s) of all hazardous wastes or constituents to be generated, handled or managed at facility: _____

_____

_____

ii. Generally describe processes or activities involving hazardous wastes or constituents: _____

_____

_____

iii. Specify amount to be handled or generated _____ tons/month

iv. Describe any proposals for on-site minimization, recycling or reuse of hazardous constituents: _____

_____

_____

v. Will any hazardous wastes be disposed at an existing offsite hazardous waste facility? ☐ Yes ☐ No

If Yes: provide name and location of facility: _____

_____

If No: describe proposed management of any hazardous wastes which will not be sent to a hazardous waste facility:

_____

_____

E. Site and Setting of Proposed Action

E.1. Land uses on and surrounding the project site

a. Existing land uses.

i. Check all uses that occur on, adjoining and near the project site.

☑ Urban ☐ Industrial ☑ Commercial ☑ Residential (suburban) ☐ Rural (non-farm)

☐ Forest ☐ Agriculture ☐ Aquatic ☐ Other (specify): _____

ii. If mix of uses, generally describe:

_____

_____

b. Land uses and covertypes on the project site. (Calculations based on entire project - all three sites)

Land use or Covertype	Current Acreage	Acreage After Project Completion	Change (Acres +/-)
• Roads, buildings, and other paved or impervious surfaces	2.43	2.45	+ 0.02
• Forested	N/A	N/A	N/A
• Meadows, grasslands or brushlands (non-agricultural, including abandoned agricultural)	N/A	N/A	N/A
• Agricultural (includes active orchards, field, greenhouse etc.)	N/A	N/A	N/A
• Surface water features (lakes, ponds, streams, rivers, etc.)	N/A	N/A	N/A
• Wetlands (freshwater or tidal)	N/A	N/A	N/A
• Non-vegetated (bare rock, earth or fill)	N/A	N/A	N/A
• Other Describe: Lawn / Landscaped Area	0.49	0.47	- 0.02

c. Is the project site presently used by members of the community for public recreation? ☐ Yes ☑ No

i. If Yes: explain: _____

d. Are there any facilities serving children, the elderly, people with disabilities (e.g., schools, hospitals, licensed day care centers, or group homes) within 1500 feet of the project site? ☑ Yes ☐ No

If Yes,

i. Identify Facilities:

Poughkeepsie High and Middle Schools, Smith School Early Learning Center

e. Does the project site contain an existing dam? ☐ Yes ☑ No

If Yes:

i. Dimensions of the dam and impoundment:

- Dam height: _____ feet
- Dam length: _____ feet
- Surface area: _____ acres
- Volume impounded: _____ gallons OR acre-feet

ii. Dam's existing hazard classification: _____

iii. Provide date and summarize results of last inspection:

_____

f. Has the project site ever been used as a municipal, commercial or industrial solid waste management facility, or does the project site adjoin property which is now, or was at one time, used as a solid waste management facility? ☐ Yes ☑ No

If Yes:

i. Has the facility been formally closed? ☐ Yes ☐ No

- If yes, cite sources/documentation: _____

ii. Describe the location of the project site relative to the boundaries of the solid waste management facility:

_____

iii. Describe any development constraints due to the prior solid waste activities: _____

g. Have hazardous wastes been generated, treated and/or disposed of at the site, or does the project site adjoin property which is now or was at one time used to commercially treat, store and/or dispose of hazardous waste? ☐ Yes ☑ No

If Yes:

i. Describe waste(s) handled and waste management activities, including approximate time when activities occurred:

_____

h. Potential contamination history. Has there been a reported spill at the proposed project site, or have any remedial actions been conducted at or adjacent to the proposed site? ☐ Yes ☑ No

If Yes:

i. Is any portion of the site listed on the NYSDEC Spills Incidents database or Environmental Site Remediation database? Check all that apply: ☐ Yes ☐ No

☐ Yes – Spills Incidents database Provide DEC ID number(s): _____

☐ Yes – Environmental Site Remediation database Provide DEC ID number(s): _____

☐ Neither database

ii. If site has been subject of RCRA corrective activities, describe control measures:_____

_____

iii. Is the project within 2000 feet of any site in the NYSDEC Environmental Site Remediation database? ☐ Yes ☑ No

If yes, provide DEC ID number(s): _____

iv. If yes to (i), (ii) or (iii) above, describe current status of site(s):

_____

v. Is the project site subject to an institutional control limiting property uses? ☐ Yes ☐ No

- If yes, DEC site ID number: _____
- Describe the type of institutional control (e.g., deed restriction or easement): _____
- Describe any use limitations: _____
- Describe any engineering controls: _____
- Will the project affect the institutional or engineering controls in place? ☐ Yes ☐ No
- Explain: _____

E.2. Natural Resources On or Near Project Site

a. What is the average depth to bedrock on the project site? 10 +/- feet

b. Are there bedrock outcroppings on the project site? ☐ Yes ☑ No
If Yes, what proportion of the site is comprised of bedrock outcroppings? _____%

c. Predominant soil type(s) present on project site: Ur (Urban Land) 100%

d. What is the average depth to the water table on the project site? Average: 2 +/- feet

e. Drainage status of project site soils:
☐ Well Drained: _____% of site
☐ Moderately Well Drained: _____% of site
☑ Poorly Drained 100% of site

f. Approximate proportion of proposed action site with slopes:
☑ 0-10%: 100% of site
☐ 10-15%: _____% of site
☐ 15% or greater: _____% of site

g. Are there any unique geologic features on the project site? ☐ Yes ☑ No
If Yes, describe: _____

h. Surface water features.

i. Does any portion of the project site contain wetlands or other waterbodies (including streams, rivers, ponds or lakes)? ☐ Yes ☑ No

ii. Do any wetlands or other waterbodies adjoin the project site? ☐ Yes ☑ No

If Yes to either *i* or *ii*, continue. If No, skip to E.2.i.

iii. Are any of the wetlands or waterbodies within or adjoining the project site regulated by any federal, state or local agency? ☐ Yes ☑ No

iv. For each identified regulated wetland and waterbody on the project site, provide the following information:

- Streams: Name _____ Classification _____
- Lakes or Ponds: Name _____ Classification _____
- Wetlands: Name _____ Approximate Size _____
- Wetland No. (if regulated by DEC) _____

v. Are any of the above water bodies listed in the most recent compilation of NYS water quality-impaired waterbodies? ☐ Yes ☑ No

If yes, name of impaired water body/bodies and basis for listing as impaired: _____

i. Is the project site in a designated Floodway? ☐ Yes ☑ No

j. Is the project site in the 100-year Floodplain? ☐ Yes ☑ No

k. Is the project site in the 500-year Floodplain? ☐ Yes ☑ No

l. Is the project site located over, or immediately adjoining, a primary, principal or sole source aquifer? ☐ Yes ☑ No
If Yes:

i. Name of aquifer: _____

m. Identify the predominant wildlife species that occupy or use the project site: _____
N/A _____ _____ _____
_____ _____ _____

n. Does the project site contain a designated significant natural community? ☐ Yes ☑ No
If Yes:
i. Describe the habitat/community (composition, function, and basis for designation): _____
_____
ii. Source(s) of description or evaluation: _____
iii. Extent of community/habitat:
- Currently: _____ acres
- Following completion of project as proposed: _____ acres
- Gain or loss (indicate + or -): _____ acres

o. Does project site contain any species of plant or animal that is listed by the federal government or NYS as endangered or threatened, or does it contain any areas identified as habitat for an endangered or threatened species? ☐ Yes ☑ No

If Yes:
i. Species and listing (endangered or threatened): _____
_____
_____

p. Does the project site contain any species of plant or animal that is listed by NYS as rare, or as a species of special concern? ☐ Yes ☑ No

If Yes:
i. Species and listing: _____
_____

q. Is the project site or adjoining area currently used for hunting, trapping, fishing or shell fishing? ☐ Yes ☑ No
If yes, give a brief description of how the proposed action may affect that use: _____
_____

E.3. Designated Public Resources On or Near Project Site

a. Is the project site, or any portion of it, located in a designated agricultural district certified pursuant to Agriculture and Markets Law, Article 25-AA, Section 303 and 304? ☐ Yes ☑ No
If Yes, provide county plus district name/number: _____

b. Are agricultural lands consisting of highly productive soils present? ☐ Yes ☑ No
i. If Yes: acreage(s) on project site? _____
ii. Source(s) of soil rating(s): _____

c. Does the project site contain all or part of, or is it substantially contiguous to, a registered National Natural Landmark? ☐ Yes ☑ No
If Yes:
i. Nature of the natural landmark: ☐ Biological Community ☐ Geological Feature
ii. Provide brief description of landmark, including values behind designation and approximate size/extent: _____
_____
_____

d. Is the project site located in or does it adjoin a state listed Critical Environmental Area? ☐ Yes ☑ No
If Yes:
i. CEA name: _____
ii. Basis for designation: _____
iii. Designating agency and date: _____

e. Does the project site contain, or is it substantially contiguous to, a building, archaeological site, or district which is listed on the National or State Register of Historic Places, or that has been determined by the Commissioner of the NYS Office of Parks, Recreation and Historic Preservation to be eligible for listing on the State Register of Historic Places? ☑ Yes ☐ No

If Yes:

i. Nature of historic/archaeological resource: ☐ Archaeological Site ☑ Historic Building or District

ii. Name: Glebe House

iii. Brief description of attributes on which listing is based:

One of the earliest houses in Poughkeepsie and rare for its early use of brick in this location. Initial construction c. 1767.

f. Is the project site, or any portion of it, located in or adjacent to an area designated as sensitive for archaeological sites on the NY State Historic Preservation Office (SHPO) archaeological site inventory? ☑ Yes ☐ No

g. Have additional archaeological or historic site(s) or resources been identified on the project site? ☐ Yes ☑ No

If Yes:

i. Describe possible resource(s): _____

ii. Basis for identification: _____

h. Is the project site within fives miles of any officially designated and publicly accessible federal, state, or local scenic or aesthetic resource? ☑ Yes ☐ No

If Yes:

i. Identify resource: Empire StateTrail, Walkway over the Hudson State Historic Park

ii. Nature of, or basis for, designation (e.g., established highway overlook, state or local park, state historic trail or scenic byway, etc.): State Park and County Scenic Trail

iii. Distance between project and resource: 1.5 miles.

i. Is the project site located within a designated river corridor under the Wild, Scenic and Recreational Rivers Program 6 NYCRR 666? ☐ Yes ☑ No

If Yes:

i. Identify the name of the river and its designation: _____

ii. Is the activity consistent with development restrictions contained in 6NYCRR Part 666? ☐ Yes ☐ No

F. Additional Information

Attach any additional information which may be needed to clarify your project.

If you have identified any adverse impacts which could be associated with your proposal, please describe those impacts plus any measures which you propose to avoid or minimize them.

G. Verification

I certify that the information provided is true to the best of my knowledge.

Applicant/Sponsor Name Jay Diesing, RA AIA - Mauri Architects PC Date 5 April 24

Signature  Title Architect

PRINT FORM

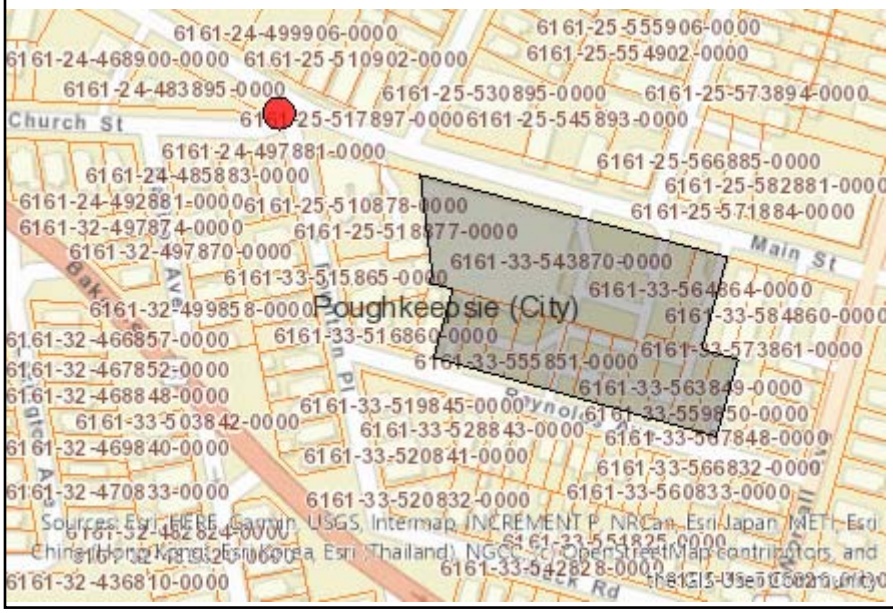

Disclaimer: The EAF Mapper is a screening tool intended to assist project sponsors and reviewing agencies in preparing an environmental assessment form (EAF). Not all questions asked in the EAF are answered by the EAF Mapper. Additional information on any EAF question can be obtained by consulting the EAF Workbooks. Although the EAF Mapper provides the most up-to-date digital data available to DEC, you may also need to contact local or other data sources in order to obtain data not provided by the Mapper. Digital data is not a substitute for agency determinations.



B.i.i [Coastal or Waterfront Area]	No
B.i.ii [Local Waterfront Revitalization Area]	No
C.2.b. [Special Planning District]	Digital mapping data are not available or are incomplete. Refer to EAF Workbook.
E.1.h [DEC Spills or Remediation Site - Potential Contamination History]	Digital mapping data are not available or are incomplete. Refer to EAF Workbook.
E.1.h.i [DEC Spills or Remediation Site - Listed]	Digital mapping data are not available or are incomplete. Refer to EAF Workbook.
E.1.h.i [DEC Spills or Remediation Site - Environmental Site Remediation Database]	Digital mapping data are not available or are incomplete. Refer to EAF Workbook.
E.1.h.iii [Within 2,000' of DEC Remediation Site]	No
E.2.g [Unique Geologic Features]	No
E.2.h.i [Surface Water Features]	No
E.2.h.ii [Surface Water Features]	No
E.2.h.iii [Surface Water Features]	No
E.2.h.v [Impaired Water Bodies]	No
E.2.i. [Floodway]	No
E.2.j. [100 Year Floodplain]	No
E.2.k. [500 Year Floodplain]	No
E.2.l. [Aquifers]	No
E.2.n. [Natural Communities]	No
E.2.o. [Endangered or Threatened Species]	No
E.2.p. [Rare Plants or Animals]	No
E.3.a. [Agricultural District]	No

E.3.c. [National Natural Landmark]	No
E.3.d [Critical Environmental Area]	No
E.3.e. [National or State Register of Historic Places or State Eligible Sites]	Yes - Digital mapping data for archaeological site boundaries are not available. Refer to EAF Workbook.
E.3.e.ii [National or State Register of Historic Places or State Eligible Sites - Name]	Glebe House
E.3.f. [Archeological Sites]	Yes
E.3.i. [Designated River Corridor]	No

THE CITY OF POUGHKEEPSIE

DEPARTMENT OF PUBLIC WORKS & ENGINEERING

SITE PLAN REVIEW

Form #2

1. Date: December 9, 2025

2. Name of Site Plan: Proposed Lot Line Adjustment and Commercial / Multi-Family

3. Address or Location: 654 Main Street

4. Owner: EFDS Realty Corp

5. Engineer/ Architect: Mauri

6. Yes ☐ No ☐ The site plan as forwarded by the Planning Department is acceptable and will be signed off on with no condition(s).

7. Yes ☐ No ☐ The site plan as forwarded by the Planning Department is acceptable and has been signed off on with no condition(s).

8. Yes ☒ No ☐ The applicant should be notified that the Dept. of Public Works/Engineering requires the following comment(s) be addressed:

1. Provide note regarding catch basin hoods on CP-1, reference detail 3, CP-2.
2. Provide maintenance plan for parking lot and catch basins. Plan should indicate maintenance activities (i.e. parking lot sweeping, CB hood inspections, CB inspection and vacuum cleaning) and frequency of activities. Maintenance records are to be submitted to City Engineering Department on an annual basis.

Joseph A. Chenier, Jr.

Digitally signed by Joseph A. Chenier, Jr.
Date: 2025.12.09 12:09:08 -05'00'

Joseph A. Chenier, Jr. CPESC, CPMSM
Assistant Civil Engineer

June 9, 2025

City of Poughkeepsie Planning Board
Attn: Anne Saylor, Chairman
63 Civic Center Plz
Poughkeepsie, NY 12601

cc: Lori Garcia

RE: PB2024-006 654 Main Street Architectural Review

MASS DESIGN GROUP

1 Chandler Street #101
Boston, MA 02118

289 Main Street #101
Poughkeepsie, NY 12601

hello@massdesigngroup.org
+1 857 233 5783
+1 845 473 4003

massdesigngroup.org

Dear City of Poughkeepsie Planning Board,

On Friday, May 30, 2025, Christopher Kroner of MASS conducted a preliminary architectural site visit at 654 Main Street, joined by Lori Garcia, Richard Distel, and led by Jay Diesing of Mauri Architects. The visit followed the recent approval of the project's zoning application and was informed by the Zoning Board drawing set dated April 29, 2025. The observations below are intended to clarify points discussed during the site visit and offer preliminary comments to support the Planning Board's ongoing review as the applicant continues to refine the proposal.

General Comments - The Story of Two Buildings

This application presents the challenge of two buildings sharing a single parcel while attempting to serve distinct roles. The northern building aims to function as a commercial extension of Main Street, while the southern building seeks to integrate more naturally with the residential character of Reynolds Avenue. The key visual challenge lies in how these two buildings relate to the adjacent grocery store parking lot—and to each other—across a shared lawn. Without visual aids that offer a clearer sense of perspective, it's difficult to assess which approach is more successful or how well the overall composition works.

Recommendation: Provide the planning board with at least two perspective views---one from the northwest corner of the parking lot, looking southeast and one from the southwest corner looking northeast.

General Drawing Comment
The rendered elevation appears to show a shadow, but it closely aligns with the transom window line, making it difficult to distinguish between the two.
Please clarify the intent of window treatment for the transoms.
Please provide the planning board with color elevations of all sides.
Please provide a key elevation showing both buildings west elevations with the landscape yard.



<>



Materials
Please provide the planning board with material samples and/or a materials board to help evaluate the full range of materials, finishes and colors suggested in the

architectural improvements.

Site Plan and Landscape

Street Trees
Is there an opportunity to incorporate additional street trees along Main Street to help screen the existing asphalt parking lot? It appears that two smaller ornamental trees could be added near the MarketFresh signage, with larger canopy trees used to anchor or bookend the Main Street planting zone.

We also note the specification of Callery Pear trees on the site plan. While commonly used, particularly in warmer climates, we are concerned about their susceptibility to limb breakage during ice storms due to their narrow branch angles. *We recommend confirming the suitability and hardiness of this species with a local landscape architect or certified arborist.*

Street Fencing
We see in the plans that the security fence will remain in place along Reynolds Avenue, in front of the residential building. This seems redundant with the existing, mature hedgerow of Japanese Yew, and *we would encourage the applicant to remove the fencing directly in front of the building to make the hedge the dominant streetscape screening element, punctuating the entrance with a suitable gap.*

Common Yards
In the yards around the residential buildings, *please clarify there any opportunities or intent for residents to have community garden space, or active recreation space (ie. Grills, Lawn Game Courts, Covered Gazebos, etc). For privacy a small hedgerow could be added between the parking lot and yard, perhaps to formalize the border of the yard between the buildings to become a parterre.*

PVC Fencing
In general, we understand that vinyl fencing is low maintenance, however it is generally less preferred in high traffic pedestrian areas. *We would encourage powder coated metal or wood fencing.*

Lighting

General Note
Please provide cutsheets/photos for the lighting fixtures on the lighting drawings and schedule for planning board evaluation.

Parking Lot Lighting
The pole lighting triple luminaire heads feel out of scale and purpose when now coupled with a residential building on the site. *Please consider alternative fixtures for consideration, and submit a cutsheet or images.*

MASSING

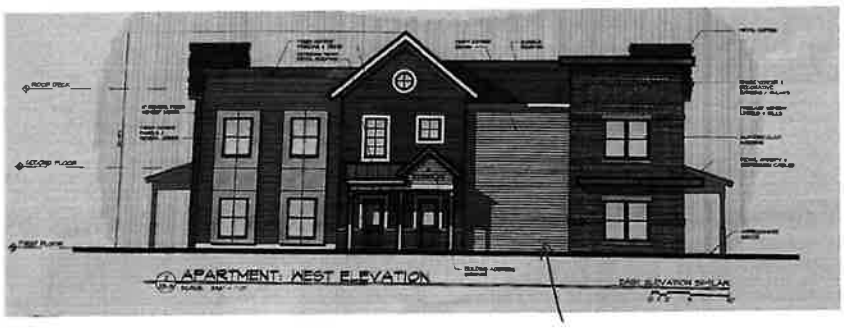

Porches
On the southern apartment building, porches are used to signify building entrances. However, their scale varies on each elevation, and in some cases, they appear to provide direct access to individual units—though this cannot be confirmed without a floor plan. On the west façade, is there potential to extend the porch toward Reynolds Avenue? This could create a shared seating area while also helping to break up the solid expanse of wall in that section.

Metal Panel Seaming at Volumetric Windows
The current design shows metal panel seams aligning with the residential window mullions. This alignment creates a post-modern aesthetic, which results in a mixed reading of architectural styles and time periods. As a potential alternative—possibly at a similar or reduced cost—we suggest considering vertical cementitious board siding with a board-and-batten detail. This could provide a more cohesive and contextually appropriate façade treatment.

Ocular Windows
The new medallion (ocular) windows introduce a curious, quasi-historic design element. Please clarify their intended purpose—for example, are they meant to provide natural light to an interior space such as a unit or stairwell?



Masonry Corners
The northern corners of the residential building lack the masonry detailing seen on the adjacent proposed buildings. Incorporating similar masonry treatments could help create a stronger visual dialogue between the two structures, despite their different programmatic uses. *We recommend including perspective views to help the Planning Board evaluate how these design choices relate to the character of the surrounding neighborhood.*

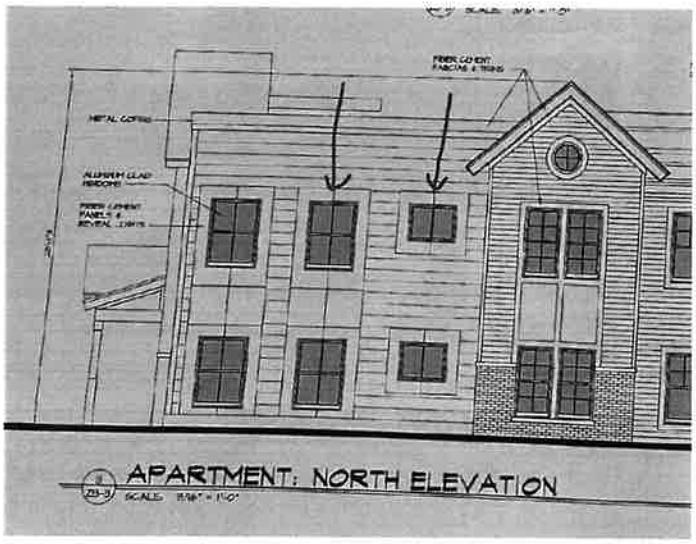

ARCHITECTURAL DETAILS, MATERIALS, AND METHODS

Glass and Curtain Wall Stair Tower

Given the level of transparency to the folks moving upstairs and downstairs, *we suggest adding a frit pattern to the glazing to help add some character and privacy to the stair tower (such as those found here: Printing on Architectural Glass - Viracon - Single Source Architectural Glass).*

Storefront glass
At the storefront commercial areas, we encourage *a simple and unobtrusive frame with wide stiles and a dark anodized or baked enamel finish.*

MECHANICAL SYSTEMS
Please clarify the intended areas and treatments for mechanical systems, especially where visible to the public.
Please clarify any gas and electric meter locations on drawings, especially where visible to the public.

We hope that the public will take an active interest in this project as it helps to continue the effort of improvements on Main Street Poughkeepsie, while also working alongside Marketfresh, an essential anchor for food access in the city. MASS looks forward to the evolution of the design of this ambitious project for Poughkeepsie.

Sincerely,

Chris Kroner
Principal
ckroner@mass-group.org

Dutchess County Department of Planning and Development

Fax Info Only		
	To	Date #pgs
	Co./Dept.	From
	Fax #	Phone #

239 Planning/Zoning Referral - Exemption Communities

Please Fill in this section

Municipality: **City of Poughkeepsie**

Referring Agency: **Planning Board**

Tax Parcel Numbers(s): **5438700000, 5648640000, 5268590000, 5308580000, 5338570000, 5378560000, 5408550000, 5448540000, 5488530000, 5518520000, 5558510000, 5598500000, 5638490000, 5678480000**

Project Name: **654 Main, 698 Main and Reynolds Avenue Lot Reconfiguration, Mixed Use and Apartment Buildings**

Applicant: **Jay Diesing, RA AIA - Mauri Architects PC**

Address of Property: **654 Main St, Poughkeepsie, NY 12601**

**Exempt Actions:*
239 Review is NOT Required**

- Administrative Amendments (fees, procedures, penalties, etc.)
- Special Permits for residential uses (accessory apts, home occupations, etc.)
- Use Variances for residential uses
- Area Variances for residential uses
- Renewals/Extension of Site Plans or Special Permits that have no changes from previous approvals

No Authority to review these Actions

- Subdivisions / Lot Line Adjustments
- Interpretations

☐ Exempt Action submitted for informal review

Actions Requiring 239 Review

- ☐ Comprehensive/Master Plans
- ☐ Zoning Amendments (standards, uses, definitions, district regulations, etc.)
- ☐ Other Local Laws associated with zoning (wetlands, historic preservation, affordable housing, architectural review, etc.)
- ☐ Rezonings involving all map changes
- ☐ Architectural Review
- ☑ Site Plans (all)
- ☐ Special Permits for all non-residential uses
- ☐ Use Variances for all non-residential uses
- ☐ Area Variances for all non-residential uses
- ☐ Other (Describe):

Parcels within 500 feet of:

- ☑ State Road:
- ☐ County Road:
- ☐ State Property (with recreation area or public building)
- ☐ County Property (with recreation area or public building)
- ☐ Municipal Boundary
- ☐ Farm operation in an Agricultural District

Date Response Requested:

Entered By: **Maegerle, Tyler**

These actions are only exempt in municipalities that signed an intermunicipal agreemment with Dutchess County to that effect.

For County Office Use Only

Response From Dutchess County Department of Planning and Development

No Comments:

- ☐ Matter of Local Concern
- ☐ No Jurisdiction
- ☐ No Authority
- ☐ Withdrawn
- ☐ Incomplete - municipality must resubmit to County
- ☐ Exempt from 239 Review
- ☐ None

Comments Attached:

- ☑ Local Concern with Comments
- ☐ Conditional
- ☐ Denial
- ☐ Incomplete with Comments- municipality must resubmit to County
- ☐ Informal Comments Only (Action Exempt from 239 Review)

Date Submitted: **12/9/2025**	Notes:	☐ Major Project
Date Received: **12/9/2025**		Referral #: **ZR25-364**
Date Requested:		
Date Required: **1/7/2026**	☐ Also mailed hard copy	Reviewer: Nina Leonard
Date Transmitted: **12/31/2025**		

December 31, 2025

To: Planning Board, City of Poughkeepsie
Re: Referral ZR25-364, 654 Main, 698 Main and Reynolds Avenue Lot Reconfiguration

The Dutchess County Department of Planning and Development has reviewed the subject referral within the framework of General Municipal Law (Article 12B, §239-l/m).

ACTION

The applicant is seeking site plan approval for a new apartment building and a new mixed-use building, with associated parking and landscaping.

COMMENTS

The proposed pole-mounted light fixtures have poor glare and backlight ratings, which is particularly notable in a mixed commercial/residential area. The plan proposes eleven of these fixtures, which should aid in achieving even light distribution across the site as compared to four on the previous site plan, however the lighting plan indicates several hot spots in the vicinity of the poles with a much higher maximum number of footcandles (up to 14.9) in some areas. Most studies indicate anything greater than five footcandles contributes to glare and light pollution without any discernable safety benefit. We suggest that the lighting plan be reevaluated to limit the intensity of these hot spots to between 2.0 and 5.0 footcandles, with no individual hot spot greater than five footcandles.

RECOMMENDATION

The Department recommends that the Board rely upon its own study of the facts in the case with due consideration of the above comments.

Eoin Wrafter, Commissioner
By

Nina Leonard

Nina Leonard
Planner

CITY OF POUGHKEEPSIE
PLANNING DEPARTMENT
JANUARY 27, 2026

654 & 698 MAIN STREET, PARCELS 6161-33-526859 THROUGH 6161-33-567848 REYNOLDS AVENUE: SITE PLAN, SPECIAL PERMIT AND SUBDIVISION

Application for subdivision, site plan and special permit review relative to a proposed development that will include the reconfiguration of fourteen lots of record into three lots. One lot, 654 Main Street, contains an existing building with a supermarket which will not be altered. Another lot, 698 Main Street, will contain a mixed-use building with commercial on the first floor and 7 dwelling units. The third lot will front Reynold Avenue and contain 28 dwelling units. The residential developments will contain usable open space. The existing parking lot will be reconfigured to include fewer spaces overall and additional landscaping. The parking lot is proposed to be shared between the three properties; Owner/Applicant: EFDS Realty Corp; Consultant: Jay Diesing, RA AIA, Mauri Architects PC; Grid #6161-33-543870, 543870, 543864, 543859, 543858, 543857, 543856, 543855, 543854, 543853, 543852, 543851, 543850, 543849, 543848; Zoned: C-2A, R-4; File #PB2024-006

History

First appeared 5/24/24
Neg Dec Declared 5/24/24
Hearing Dates 1/27/26

Recommendations

The project is classified as an Unlisted Action under SEQR.

- Public hearing set for 1/27/26.
- Application received area variances from the ZBA 5.13.25 regarding landscaping and parking.
- Public Hearing must be scheduled for the project due to the subdivision and special permit application.
- Application submitted and first reviewed under the prior zoning code, and must be evaluated according to that code.
- Review revisions to elevations and response to 6.9.25 architectural review letter.
- Special permit approval is solely needed for the three-story mixed-use building at 698 Main Street. "Multiple dwellings in new structures at urban density (R-6), provided that the first floor is devoted to commercial use." Section 19-3.23.1(2)(b)(8):

Documents Entered into Record

Date	Description	Author	Comments
1/31/24	Site Plan, Special Permit and Subdivision Application	Jay Diesing, RA AIA	
1/31/24	Site Plan	Jay Diesing, RA AIA	
1/31/24	Full EAF		Full Environmental Assessment Form
1/31/24	Letter	Jay Diesing, RA AIA	

1/31/24	Supplemental	Jay Diesing, RA AIA & Ulbardo Fernandez	Transmittal, Application fee breakdown, owner consent letter
3/15/24	Letter	Judith Knauss, DZA	Denial email
4/5/24	EAF	Jay Diesing, RA AIA	Revised
5/9/24	Review	Joseph A. Chenier, Jr. CPESC, CPMSM	Engineering review 17 comments
8/9/24	Application	Jay Diesing, RA AIA	Revised
8/9/24	Letter	Brandon Petrella, RA AIA	
8/12/24	Site plan set	Martin T Diesing, RA	Revised with added elevations
12/3/25	Letter	Jay Diesing, RA AIA	Cover letter addressing engineering and design comments
12/2/25	Letter	C. Mark Velzy, PE CBK Engineering	Letter addressing water, sanitary and sprinkler
12/3/25	Site Plan	Martin T Diesing, RA	12/3/25 PB-1, PB-1.1,PB2, PB-3, PB-3.2, PB-4, PB-4.1, PB-5, PB-6, PB-6.1, PB6.2, CP-1, CP-2, CP-3

Comments Received

Date	Author	Comments
5/16/24	Joseph Franco, Fire Chief	No Comments
12/9/25	Engineering Department	Comments
4/23/24	PD, Sgt. E. Acken	no comments
4/23/24	Eric Philipp, COP Bldg Inspector	No Comments
12/31/25	Dylan Tuttle, DC Dept of Planning	Local Concern w Comments
6/9/25	Chris Kroner, MASS Architecture	Comments based on site visit

Motions & Resolutions:

With regards to application #PB2024-006, 654 & 698 Main Street;

The Planning Board opens the public hearing.
Motion:
Second:
Vote:

The Planning Board closes the public hearing.
Motion:
Second:
Vote:

If the Board feels the applicant has provided sufficient information regarding the proposed project they may move on the requested resolution of approval OR the Board may request the applicant to submit further documentation.

APPLICATION TO THE PLANNING BOARD
CITY OF POUGHKEEPSIE, NEW YORK

Application for Site Plan, Special Permit & Facade Approval

OFFICE USE ONLY

CODE: PLSF

ID #_____

FEE: _____
Total, from:
$500, plus
$_____
($150 per 1000 square feet of floor area), plus
$_____
($35 per number of required parking spaces), plus
$_____
($500 for special permit, if applicable)

I. PROPERTY ADDRESS: 185 SMITH STREET

II. PROPERTY OWNER: RICKY AUTOBODY INC
ADDRESS: 185 SMITH STREET
POUGHKEESIE
NEW YORK 12601 (state and zip code)
PHONE NUMBER: 917 416 7591 (include area code)

III. NAME OF APPLICANT: DEVANAND JAIKARRAN
ADDRESS: SAME AS ABOVE
_____
_____ (state and zip code)
PHONE NUMBER: 917 416 7591 (include area code)
EMAIL ADDRESS: _____

(If applicant is NOT the owner, proof of owner's consent to the application MUST be provided.)

IV. CONSULTANT: STUDIO 90 DESIGN & PLANNING
ADDRESS: 4 FAIRWAY DRIVE
PAWLING, N.Y. 12564
NEW YORK 12564 (state and zip code)
PHONE NUMBER: 845 239 1456 (include area code)
EMAIL ADDRESS: _____

V. PROPOSED USE or FAÇADE CHANGE (Summarize proposed use or uses):
PROPOSED ADDITION AND RENOVATION TO EXISTING AUTOMOBILE REPAIR SHOP

VI. ZONING DISTRICT: RNC Formerly R&D

(Proceed to XVII for special permit & façade approval only)

Revised January 2025: Previous Editions Obsolete

PROJECT INFORMATION

New construction:_____(yes)__X__(no)

Change of use:_____(yes)_____X_____(no)

Expansion/addition:__X__(yes)_____(no)

Alteration:__X__(yes)_____(no)

Cost of Construction: $_____

LOT AND BULK INFORMATION:

Lot area: 0.97 (acres) 42,253 (square feet)

Building Footprint: _____(proposed square feet for new construction)

8,280 (existing square feet for change of use/expansion)

3,630 (additional proposed square feet for expansion)

11,910 (total building footprint, square feet)

Lot Coverage: 28.2% (percentage, building coverage only)

Gross Floor Area: _____(proposed square feet for new construction)

8,280 (existing square feet for change of use/expansion)

3,630 (additional proposed square feet for expansion)

11,910 (total gross floor area, square feet)

Building Height: ONE (stories) 22 (feet)

Floor Area Ratio: 0.22 (ratio of gross floor area divided by lot area)

VIII. PROJECT PARKING INFORMATION

A) Number of Off-Street Parking Spaces required: 42

B) Number of Off-Street Parking Spaces provided: 30

C) Waiver Requested:_____(Yes) X (No)

Is municipal parking available within 600 feet? _____(Yes) X (No)

If yes, name all such municipal facilities: _____

_____

_____

(If a waiver is requested based on proximity to municipal facilities, a written request for such waiver, addressed to the City Planning Staff and the Chairman of the Planning Board, must be submitted with the application.)

If a private parking facility is to be utilized, is such facility within 600 feet?

_____ (Yes) (No)

If yes, provide the address of the facility, name of the property owner, number of spaces in the lot, number of spaces available for lease, and length of lease. Attach copy of lease. Additional information may be required by the Planning Board): _____

_____

_____

_____

IX. RESIDENTIAL PROPOSALS

A) Type of Development: _____
(Townhouse, condominium, multiple residence rental, etc.)

B) Unit Breakdown:

Number of efficiency or "studio" units: _____

Number of one (1) bedroom units: _____

Number of two (2) bedroom unit's _____

Number with three or more bedrooms: _____

Total number of units: _____

C) Is funding public?____Yes_____No

If yes, describe funding source: _____

X. OFFICE PROPOSALS (____Medical/Dental_____Professional_____Business)

A) Number of Employees: _____

B) Number of doctors/dentists/medical practitioners: _____

C) Days/Hours of Operation: _____

XI. SERVICE BUSINESS PROPOSALS

A) Specify Business: _____
(e.g., laundromat, drycleaner, beauty parlor, travel agency, banks)

B) Number of Employees: _____

C) Number of Washing Machines (for laundromat): _____

D) Days/Hours of Operation: _____

XII. MERCANTILE PROPOSALS (Retail_____Wholesale_____)

A) Type of Mercantile (specify): _____

B) Number of Employees: _____

C) Days/Hours of Operation: _____

XIII. STANDARD RESTAURANT/FAST FOOD RESTAURANT/COFFEE SHOP/DONUT SHOP/NIGHTCLUB/DISCOTHEQUE/BAR PROPOSALS

A) Specify Use: _____

B) Number of seats (excluding bar stools and outdoor seating):_____

C) Meals served (i.e., breakfast, lunch, dinner): _____

D) Type of Menu: _____

E) Days/Hours of Operation: _____

F) Entertainment (live and/or recorded):_____

G) Will the restaurant contain a bar/lounge?: _____Yes_____No

H) If yes, how many seats at the bar? _____

I) Is a drive-through window proposed? _____

J) Is a walk-up window proposed? _____

K) Is an outdoor seating area proposed? _____

L) If yes, how many seats are proposed? _____

M) If yes, is outdoor cooking proposed? _____

XIV. INDUSTRIAL/COMMERCIAL PROPOSALS (Automobile repair, taxi, motor vehicle sales, warehouse, manufacturing, animal hospital, research facilities, etc.)

A) Specify Use: AUTOMOBILE REPAIR

B) Number of shifts (if any): ONE

C) Number of employees: 8
(If shifts are proposed, list number of employees per shift)

E) Number of work bays (if automobile repair): 8

F) Days/Hours of operation: Monday-Friday 8AM 5PM Saturday 9 AM 12 Noon

XV. EDUCATIONAL/INSTITUTIONAL/RECREATIONAL PROPOSALS (e.g., Museums, Theatres, Conference Centers, Hotels, Motels, Hospitals, Nursing Homes, Assisted Living Facilities, Nursery Schools, Private Schools, Day Care Centers, Places of Worship, Marinas, Membership Clubs, etc.)

A) Specify: _____

B) Number of shifts (if any): _____

C) Number of employees: _____
(If shifts are proposed, list number of employees per shift)

D) Number of beds (hospitals, nursing homes, etc): _____

E) Number of seats in largest assembly space: _____

F) Number of classrooms (schools): _____

G) Number of rental units (hotels, motels, etc.) _____

H) Number of boat slips/courts (e.g., tennis, handball, etc.), alleys: _____

I) Days/Hours of Operation: _____

XVI. PROPOSALS NOT MENTIONED ABOVE (Please be specific):

_____

_____

_____

_____

_____

XVII. APPLICANT CERTIFICATION

I, DEVANAND JAIKARRAN, certify that the this application has addressed the objectives outlined in the Zoning Ordinance with consideration given to the public health, safety and welfare; the comfort and convenience of the public in general or the residents or users of the proposed development and of the immediate neighborhood.

The applicant certifies that all information contained herein is accurate and complete as of the date of this application.

Signature of Applicant

9-24-2025
Date

Revised January 2025: Previous Editions Obsolete

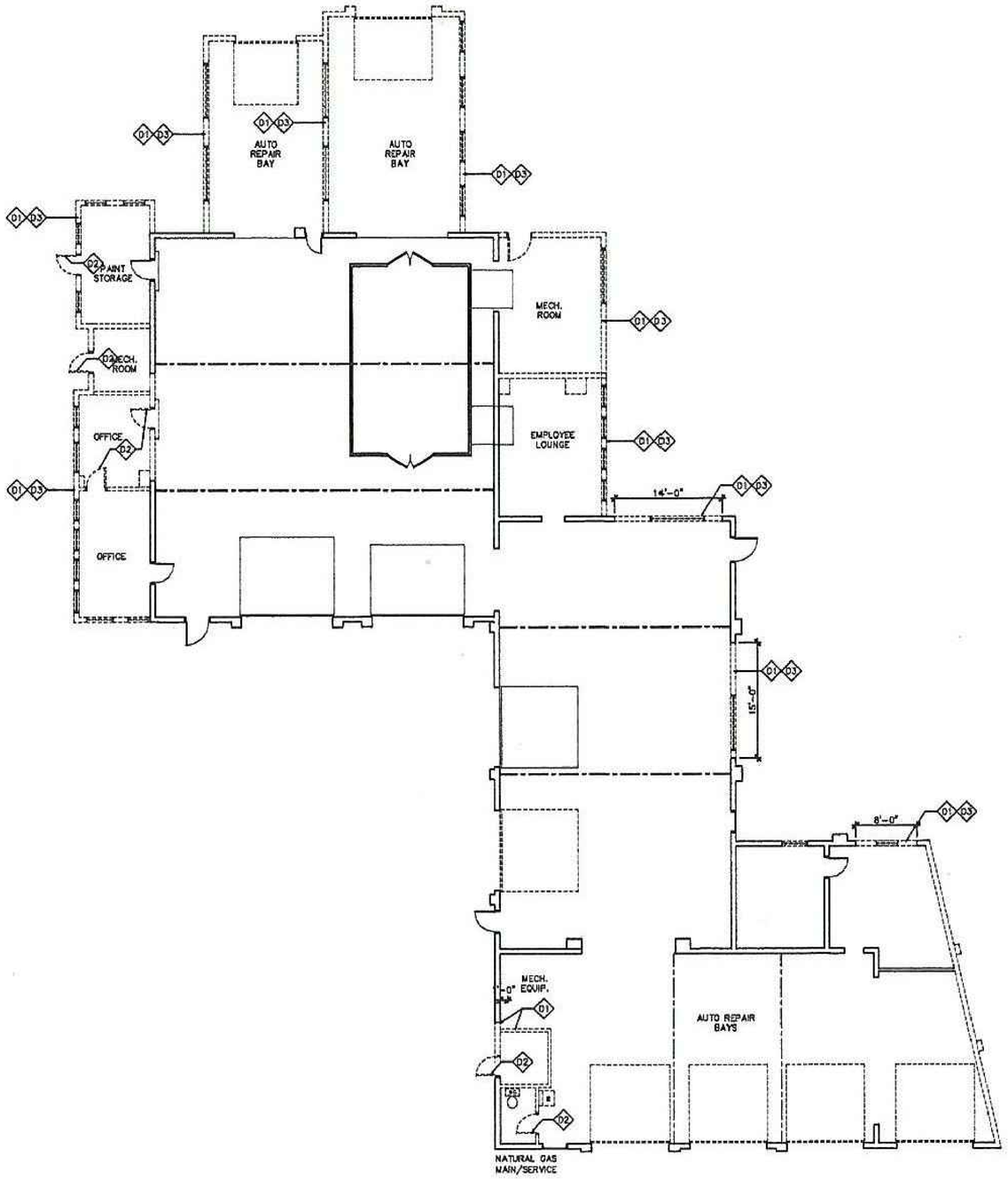

A-1 DEMOLITION PLAN
1/4"=1'-0"

N
PROJECT NORTH

GENERAL DEMOLITION NOTES:

1. DRAWING SHOWS GENERAL EXTENT OF DEMOLITION AND REMOVALS. THE OWNER/GC SHALL MAKE ALL REMOVAL AS REQUIRED TO PROPERLY INSTALL ALL NEW WORK.

2. DEMOLITION WORK SHALL INCLUDE BUT IS NOT LIMITED TO, CUTTING, DEMOLITION AND REMOVAL OF STRUCTURES, PORTIONS OF EXISTING EXTERIOR AND INTERIOR WALLS, PARTITIONS, AND CEILINGS, REMOVAL OF WINDOWS, DOORS, DOOR FRAMES, TRIM AND HARDWARE, AND PREPARING ALL AREAS LEFT BY THESE REMOVALS FOR INSTALLATION OF NEW CONSTRUCTION AND ALL OTHER ITEMS OTHERWISE REQUIRED FOR CONSTRUCTION PROGRAM. CONSULT DRAWINGS FOR ALL WORK INVOLVED.

3. FURNISH ALL MATERIALS AND EQUIPMENT NECESSARY FOR COMPLETE DEMOLITION OPERATIONS AND PROTECTION OPERATIONS.

4. REMOVALS SHALL BE PERFORMED IN A CAREFUL MANNER WITHOUT UNNECESSARY NOISE, OR OTHER DISTURBANCE TO ADJACENT FACILITIES AND GENERAL PUBLIC. CONTRACTOR SHALL PROVIDE DUST CONTROL MEASURES AND PROTECT ALL ADJACENT PROPERTIES AND PRIVATE VEHICLES FROM DUST AND DEBRIS ASSOCIATED W/ DEMOLITION OPERATIONS.

5. DEMOLITION AND REMOVALS SHALL BE PERFORMED SO THAT EXISTING FINISHES, EQUIPMENT, AND SYSTEM THAT ARE TO REMAIN ARE NOT DAMAGED. PROVIDE PROTECTION AS NEEDED TO ASSURE THAT THESE ITEMS ARE NOT DAMAGED.

6. TRAFFIC: CONDUCT DEMOLITION OPERATIONS AND THE REMOVAL OF DEBRIS TO ENSURE MINIMAL INTERFERENCE WITH ROADWAYS, WALKS, AND OTHER ADJACENT OCCUPIED FACILITIES.

7. ALL EXCESS MATERIALS RESULTING FROM DEMOLITION OPERATION SHALL BECOME THE PROPERTY OF THE DEMOLITION CONTRACTOR AND SHALL BE DISPOSED OFF JOB SITE USING APPROVED METHODS, AND AS REQUIRED BY ALL AGENCIES, ETC WITH JURISDICTION.

8. EXISTING SPACES, ADJACENT BUILDING AREAS AND CONSTRUCTIONS WHICH ARE TO REMAIN, SHALL BE PROTECTED AGAINST DUST MIGRATION AND DAMAGE. EXTREME PRECAUTION SHALL BE EXERCISED, AND PROTECTION SHALL BE PROVIDED TO PREVENT BODILY INJURY TO PUBLIC. PROVIDE SEALED ACCESS DOORS; ERECT AND MAINTAIN ALL BARRICADES, LIGHTS, WARNING SIGNS AND GUARDS AS REQUIRED BY ORDINANCES, LAWS AND REGULATIONS AND FOR STAGING AND PHASING.

9. DAMAGE: PROMPTLY REPAIR DAMAGE CAUSED TO ADJACENT OUT OF SCOPE FACILITIES BY DEMOLITION OPERATIONS, AT NO ADDITIONAL COST TO THE OWNER.

10. REMOVE OR CUT HOLES IN WALL, FLOORS OR ROOF OF EXISTING CONSTRUCTION WHERE SHOWN OR WHERE NECESSARY FOR INSTALLATION OF NEW WORK.

11. COORDINATE MEP WITH OWNER FOR REMOVALS AND NEW INSTALLATION. ALL ABANDONED WIRING, PIPING AND EQUIPMENT SHALL BE REMOVED EXCEPT THOSE IN EXISTING WALL AND SLABS THAT ARE TO REMAIN. PROPERLY CAP AND/OR TERMINATE ABANDONED PIPING AND WIRING THAT REMAINS.

12. AT ALL REMOVED MECHANICAL, PLUMBING, ELECTRICAL, EQUIPMENT, PIPING, CONDUITS, ETC, LINES ARE TO BE REMOVED TO SOURCE OR CAPPED AND ABANDONED IN PLACE, WHERE POSSIBLE. NOTIFY THE OWNER IMMEDIATELY FOLLOWING FINDING PIPING, CHASES, DUCTWORK, ETC WITHIN THE WALLS TO BE DEMOLITIONED THAT WILL CAUSE CHANGE IN DESIGN. COORDINATE W/ MEP DEMO NOTES.

13. ALL CONSTRUCTION SHOWN DOTTED MUST BE REMOVED AND CLEANED TO EXISTING SUBSTRATE FOR NEW CONSTRUCTION.

14. PRIOR TO SUBMITTING A PROPOSAL, THE CONTRACTOR SHALL VISIT THE SITE TO REVIEW THE EXISTING CONDITIONS ASSOCIATED WITH THE SCOPE OF WORK AND ADJACENT AREAS TO ASCERTAIN THE DIFFICULTIES WHICH WILL AFFECT THE EXECUTION OF THE WORK OF THIS CONTRACT.

15. SUBMISSION OF A PROPOSAL WILL BE CONSTRUED AS EVIDENCE THAT THE ABOVE SITE EXAMINATION HAS BEEN MADE AND LATER CLAIMS WILL NOT BE RECOGNIZED FOR EXTRA LABOR, EQUIPMENT, OR MATERIALS REQUIRED BECAUSE OF DIFFICULTIES ENCOUNTERED WHICH COULD HAVE BEEN FORESEEN HAD SUCH AN EXAMINATION BEEN MADE.

16. DEMOLITION WORK SHALL INCLUDE ALL LABOR, EQUIPMENT, AND MATERIALS REQUIRED TO MAINTAIN EXISTING SERVICES PENDING THE COMPLETION OF PERMANENT WORK.

17. COORDINATE ALL DEMOLITION WORK WITH THE WORK OF OTHER TRADES AND WITH THE TENANT AND LANDLORD.

18. NOTIFY THE OWNER IMMEDIATELY FOLLOWING FINDING PIPING, CHASES, DUCTWORK, ETC. WITHIN THE WALLS TO BE DEMOLISHED THAT WILL CAUSE CHANGE IN THE DESIGN.

IF THE CONTRACTOR DURING THE COURSE OF WORK OBSERVES UNANTICIPATED ACBM ASBESTOS OR LEAD BASED MATERIALS IN THE STRUCTURE OF BUILDING, THE CONTRACTOR SHALL PROMPTLY NOTIFY OWNER AND ARCHITECT. OWNER SHALL CONSULT WITH ARCHITECT AND ENGINEER REGARDING REMOVAL OR ENCAPSULATION OF THE ASBESTOS MATERIAL AND CONTRACTOR SHALL NOT PERFORM ANY WORK PERTINENT TO THE ASBESTOS OR LEAD MATERIAL PRIOR TO RECEIPT OF SPECIAL INSTRUCTIONS FROM OWNER.

ASBESTOS OR LEAD REMOVAL: IMPLEMENTATION MAY UNCOVER UNANTICIPATED LEAD BASED OR ASBESTOS-CONTAINING BUILDING MATERIALS. THE ARCHITECT IS NOT RESPONSIBLE FOR THE PERFORMANCE OF ANY SERVICES IN CONNECTION WITH OR RELATED TO SUCH MATERIALS, AND CONTRACTOR HEREBY AGREES TO IMMEDIATELY NOTIFY THE OWNER:

A: RETAIN AN EXPERT OR EXPERTS TO ARRANGE FOR THE PROMPT IDENTIFICATION OR, AND/OR REMOVAL OR TREATMENT OF SUCH MATERIALS ON THE PROJECTS, AND

B: IDENTIFY AND HOLD ARCHITECT AND HIS CONSULTANTS HARMLESS FROM ANY CLAIMS, INJURIES, OR EXPENSES, INCLUDING THE REASONABLE COUNSEL FEES, INCURRED BY THE ARCHITECT AND ITS CONSULTANTS ARISING OUT OF OR IN ANY WAY RELATED TO THE EXISTENCE OF SUCH MATERIALS ON THE PROJECT.

DEMOLITION KEY NOTES:

D1 REMOVE EXISTING WALLS AS SHOWN DASHED COMPLETELY; CUT AND PATCH AS REQUIRED. BEFORE REMOVING WALL VERIFY IF THE WALL IS LOAD BEARING.

D2 REMOVE EXISTING DOORS, FRAMES AND HARDWARE AS SHOWN DASHED COMPLETELY; CUT AND PATCH AS REQUIRED.

D3 REMOVE EXISTING WINDOW & FRAMES COMPLETELY. CUT & PATCH WALLS AS REQUIRED.

D4 REMOVE ALL EXISTING FLOORING AND ANY DAMAGED SUBSTRATE. CUT AND PATCH AS REQUIRED. PREP SUBSTRATE FOR THE INSTALLATION OF NEW FLOORING.

LEGEND:

EXISTING WALL / DOOR TO BE REMOVED

EXISTING WALL / DOOR TO REMAIN

NEW CONSTRUCTION

DAY|STOKOSA ENGINEERING P.C.
3 Van Wyck
Wappingers Falls, New York
(845)-223-3202

CBK Engineering P.C.
129 Clove Branch Road Suite 104
Hopewell Junction . N.Y. 12533
T (914) 609-6557 F (914) 609-8162

No.	REVISION/SUBMISSION	DATE

Liscum McCormack VanVoorhis
ARCHITECTURE PLANNING INTERIORS
181 CHURCH STREET POUGHKEEPSIE, NEW YORK 12601 PHONE 845-452-2268 FAX 845-452-3752

PROJECT
VINCE'S AUTOBODY
185 SMITH STREET
POUGHKEEPSIE, NY

DRAWING
DEMOLITION PLAN

REGISTERED ARCHITECT MICHAEL T.J. McCORMACK No. 019089-1 STATE OF NEW YORK

DRAWN BY	PROJECT NUMBER
KY	22131
CHECKED BY	DATE
MM	7-15-25

DRAWING NUMBER
D100

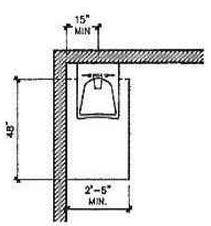

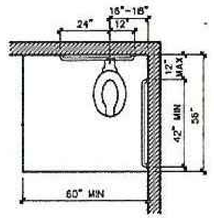

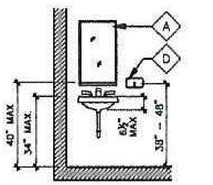

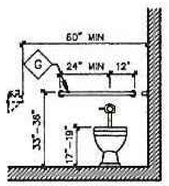

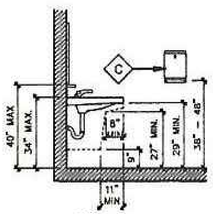

ICC/ANSI-A117.1-2009
CLEAR FLOOR SPACE AT SINKS AND LAVS.

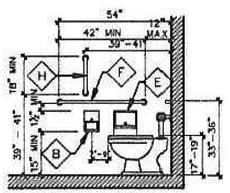

ICC/ANSI-A117.1-2009
CLEAR FLOOR SPACE AT WATER CLOSETS

TOILET ACCESSORIES SCHEDULE

SYMBOL	ITEM
A	48" X 24" MIRROR, TEMP GLASS PROVIDED & INSTALLED BY CONTRACTOR
B	SURF. MNTD TOILET PAPER DISP., PROVIDED BY & INSTALLED BY CONT.
C	ELECTRIC HAND DRYER, PROVIDED BY AND INSTALLED BY CONTRACTOR
D	SOAP DISPENSER, PROVIDED AND INSTALLED BY CONTRACTOR
E	FEMININE NAPKIN DISPOSAL, PROVIDED AND INSTALLED BY CONTRACTOR
F	42" GRAB BAR, PROVIDED AND INSTALLED BY CONTRACTOR
G	36" GRAB BAR, PROVIDED AND INSTALLED BY CONTRACTOR
H	18" GRAB BAR, PROVIDED AND INSTALLED BY CONTRACTOR

* CONTRACTOR TO PROVIDE FIRE-RATED WOOD BLOCKING WITHIN WALLS FOR ALL TOILET ACCESSORIES (IN A CONCEALED MANNER) MIRRORS, GRAB BARS, ETC. COORDINATE AND CUT AND PATCH AS REQUIRED.

PROVIDE WRAPPING AT ALL EXPOSED HOT AND COLD WATER PIPES AND WASTE LINES. THIS IS TO OCCUR AT ALL EXPOSED PIPE AREAS.

ALL UNITS AS INDICATED ARE REQUIRED TO MEET ALL MANUFACTURERS AND HANDICAP ACCESSIBILITY SPECIFICATIONS AND DIMENSIONS.

COORDINATE TILE FINISH AT ALL TOILET ACCESSORIES SUCH AS PAPER TOWELS, MIRRORS, ETC.

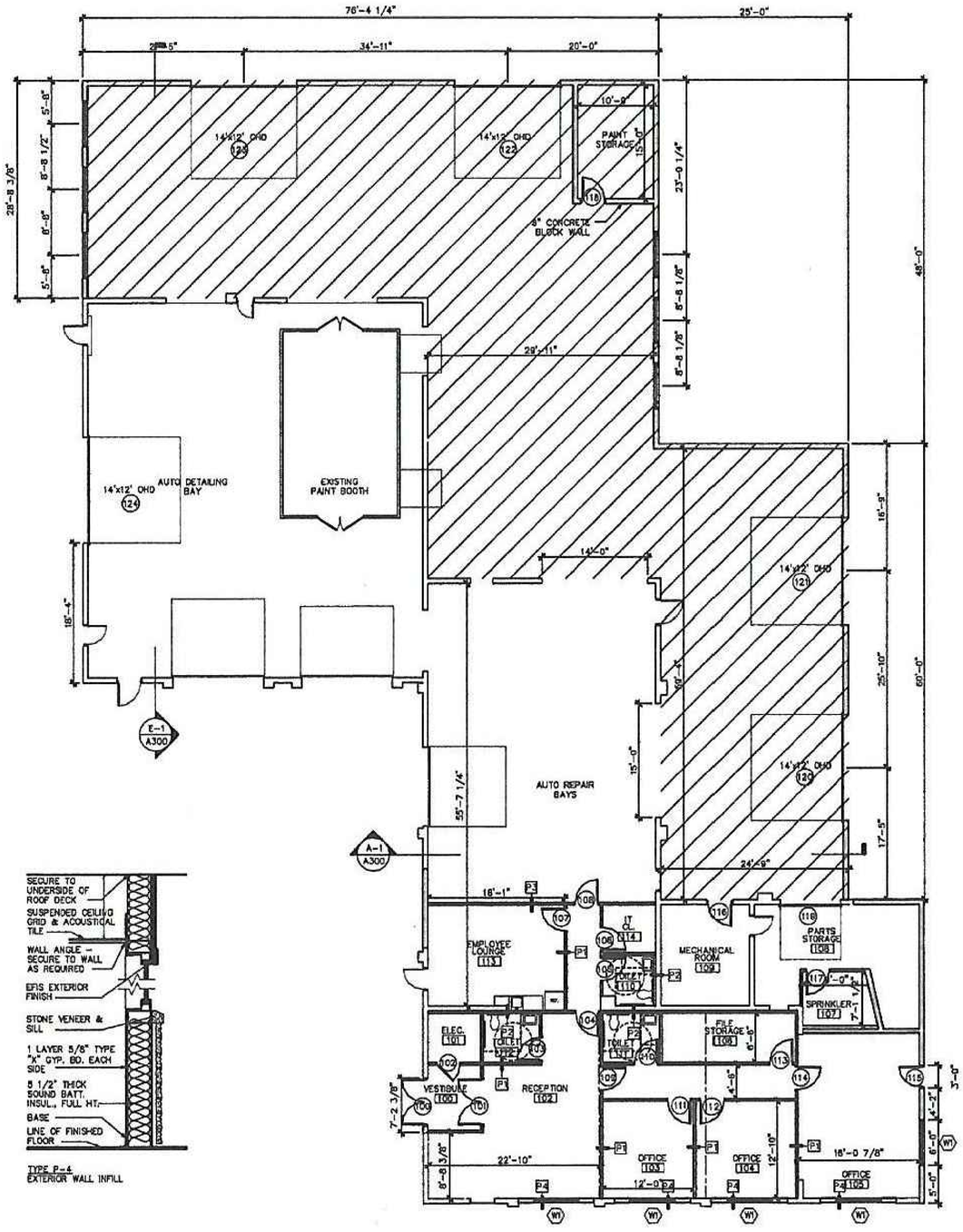

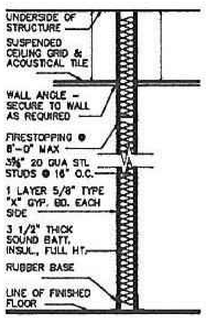

TYPE P-1
UNLESS OTHERWISE NOTED (PROVIDE MOIST. RESIST. GWB ON WET WALLS)

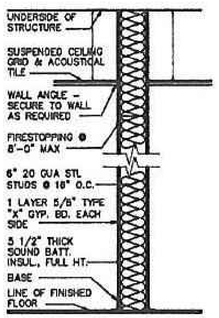

TYPE P-2
(TYPE P-2.1 – MOIST. RESIST. GWB ON WET SIDE OF WALL)

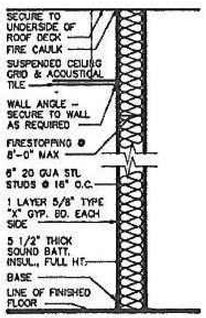

TYPE P-3
1 HOUR RATED UL DESIGN U425 PROVIDE RATED DOORS WHERE SHOWN (MOIST. RESIST. GWB ON WET SIDE OF WALL)

TYPE P-4
EXTERIOR WALL INFILL

PARTITION NOTES:

1. ALL GYPSUM WALLBOARD TO BE 5/8" TYPE "X".

2. PROVIDE WATER RESISTANT/MOISTURE RESISTANT GYPSUM WALLBOARD AT ALL WET AREAS. PROVIDE CEMENT BOARD AT ALL TILED WALL SURFACES IN PLACE OF GWB. REFER TO FLOOR PLAN AND PARTITION TYPES FOR ADDITIONAL INFORMATION.

3. PROVIDE PARTITION REINFORCEMENT OR BLOCKING WITHIN WALLS FOR THE FASTENING OF ALL WALL MOUNTED ACCESSORIES, EQUIPMENT, RAILINGS, SCREENS, GRAB BARS, ETC.

4. PROVIDE SEALANT WHEN GYPSUM WALLBOARD IS PERPENDICULAR TO ADJACENT SURFACES, TYPICAL. (WALL, FLOOR, STRUCTURE)

5. PROVIDE FIRESTOPPING INSULATION AND BLOCKING AT ALL VOID SPACES AND AT ALL RATED WALL CONDITIONS.

LEGEND:

EXISTING WALL / DOOR TO BE REMOVED

EXISTING WALL / DOOR TO REMAIN

NEW CONSTRUCTION

DAY|STOKOSA
ENGINEERING P.C.
3 Van Wyck
Wappingers Falls, New York
(845)-223-3202

CBK Engineering P.C.
129 Clove Branch Road Suite 104
Hopewell Junction, N.Y. 12533
T (914) 509-6557 F (914) 509-8162

No.	REVISION/SUBMISSION	DATE

Liscum McCormack VanVoorhis
181 CHURCH STREET
ARCHITECTURE POUGHKEEPSIE, NEW YORK 12601
PLANNING & INTERIORS PHONE 845-452-2266 FAX 845-452-5752

PROJECT
VINCE'S AUTOBODY
185 SMITH STREET,
POUGHKEEPSIE, NY

DRAWING
FLOOR PLAN

DRAWN BY	PROJECT NUMBER
KY	22131
CHECKED BY	DATE
MM	7-15-25

REGISTERED ARCHITECT MICHAEL T.J. McCORMACK No. 018038-1 STATE OF NEW YORK

DRAWING NUMBER
A100

P:\2022\JOB # - JOB NAME\

A-1 FLOOR PLAN
1/4"=1'-0"

PROJECT NORTH

ZONING DATA

CITY OF POUGHKEEPSIE N,Y, OCTOBER 2024 ZONING AND USE REGULATIONS

PARCEL NUMBER: 6161-65-510286 — YEAR BUILT: 1960

ZONING DISTRICT: RESIDENTIAL NEIGHBORHOOD C 5- (RNC) (FORMER R&D)

USE: AUTO REPAIR SHOP

LOT AREA AND COVERAGE	REQUIRED	EXISTING	PROPOSED
LOT AREA (Min.)	N/A	± 0.97 Acres	± 0.97 Acres
LOT WIDTH	25'	± 170'	± 170'
LOT COVERAGE	70%	± 53.3%	±55.9%
BUILDING PLACEMENT			
PRIMARY BUILDING PLACEMENT			
PRIMARY STREET SETBACK	20'	34.20'	34.20'
SECONDARY STREET SETBACK	10'	N/A	N/A
SIDE SETBACK (Min.)	5'	19.70'	±26.47'
REAR SETBACK (Min.)	15'	57.60'	±50.88'
HEIGHT (Max.)	2.5/35'	ONE STORY/±16'	ONE STORY/±22'
PARKING SPACES	42		30
BICYCLE PARKING	4	0	4
LANDSCAPE BUFFER	10'	3'	10'
ADA PARKING	2	2	2
DRIVEWAY 12 Feet (Min) 10 feet to Property Line	Proposed: 15.26', 10' to Property Line		
ENTRANCE	FRONT	FRONT	SIDE
OPEN, USABLE SPACE	7% ± 1,760 S.F.		± 12.7% ±3,200 S.F.

PROPERTY NOTES

1. THERE ARE NO WAIVERS REQUESTED.
2. THERE ARE NO EXISTING EASEMENTS, RIGHTS OF WAY, SETBACKS, RESERVATIONS AND REARS DEDICATED TO PUBLIC USE, OUTLINE OF EXISTING COVENANTS AND DEED RESTRICTIONS WITHIN, ADJACENT TO OR OTHERWISE PERTAINING TO THE PROPERTY.
3. APPLICANT IS FINANCIALLY CAPABLE TO COMPLETE THE PROPOSED PROJECT.
4. THERE ARE NO PROPOSED FIRE ALARM BOXES AND OR CONNECTIONS TO CITY FIRE ALARM SYSTEM.
5. NO DAMAGE TO SMITH STREET ENTRANCE AND SIDEWALK.
6. THERE ARE NO NEW PROPOSED GRADE CHANGES, EXISTING GRADE IS TO REMAIN.
7. THERE ARE NO WATER COURSES, MARSHES, WOODED AREAS, ROCK CROPS WITHIN THE SITE THE SITE IS NOT WITHIN OR ADJACENT TO A FLOOD PLAN.
8. STORMWATER MEASURES WILL BE ADDRESSED ON SITE WITH 'CULTEC' STORMWATER MANAGEMENT SYSTEM.

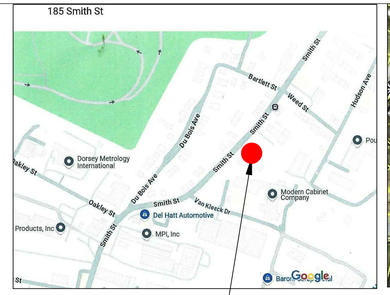

LOCATION MAP



SITE

N

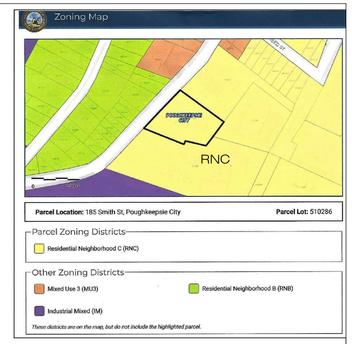

185 SMITH STREET

POUGHKEEPSIE, N.Y. 12601
PARCEL TAX ID.: 6162-65-510286
ZONING DISTRICT: Residential Neighborhood C-(RNC)
YEAR BUILT: 1960
OWNER : RICKY AUTO BODY INC.
USE: AUTO BODY REPAIR SHOP
LOT AREA: ± 0.97 ACRES
BUILDING FLOOR AREA: ± 12,000 S.F.

PROJECT: PROPOSED ONE STORY ADDITION
INTERIOR ALTERATION & RENOVATIONS

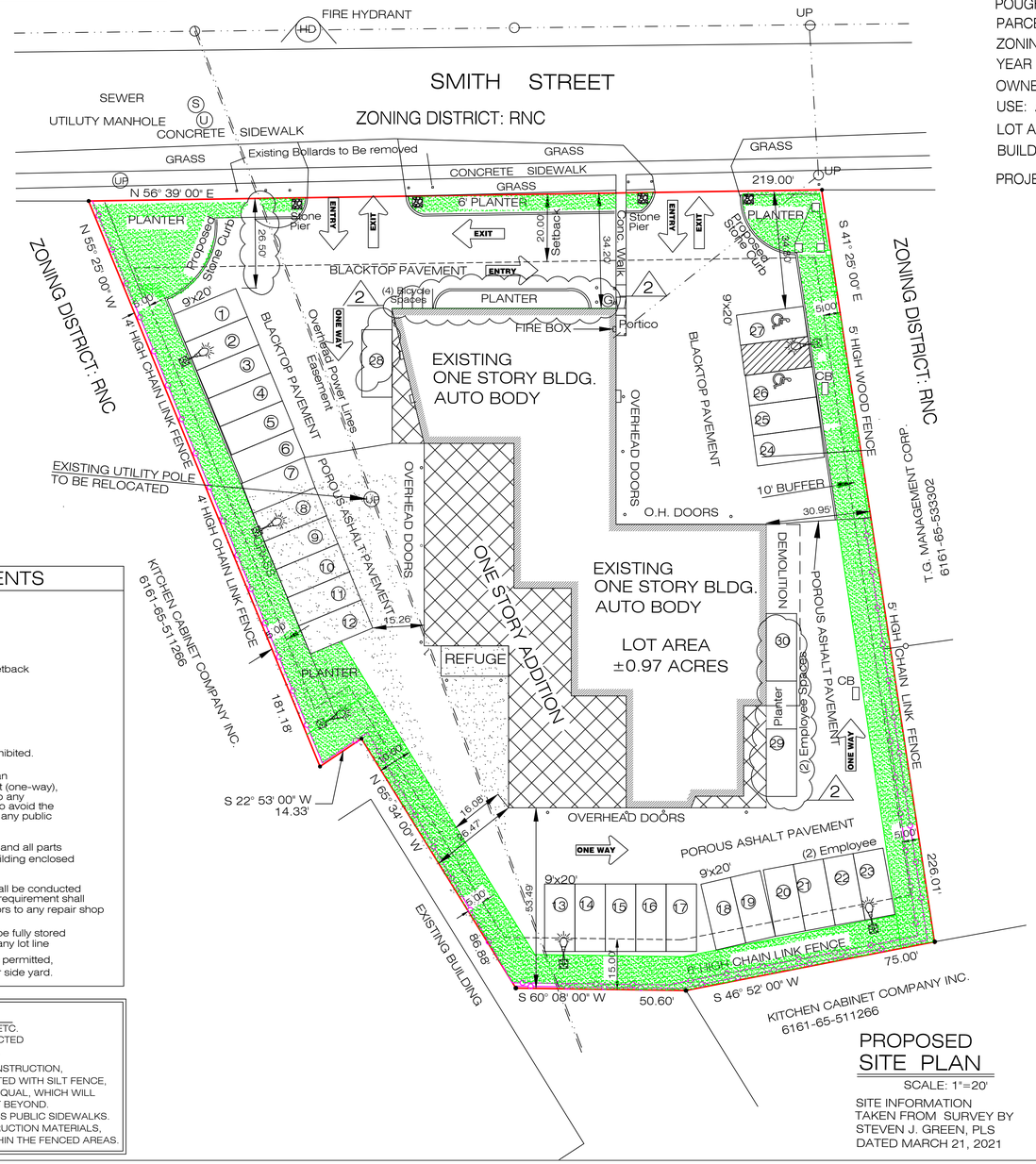

PROPOSED SITE PLAN

SCALE: 1"=20'

SITE INFORMATION
TAKEN FROM SURVEY BY
STEVEN J. GREEN, PLS
DATED MARCH 21, 2021

LEGEND

- PROPERTY LINE
- SETBACK LINE
- EXISTING BUILDING
- PROPOSED ADDITION
- UP — UTILITY POLE
- CB — CATCH BASIN
- RL — ROOF LEADER
- LP — LIGHT POLE
- HD — FIRE HYDRANT
- G — GAS
- W — WATER
- S — SEWER
- WOOD FENCE
- CHAIN LINK FENCE
- POROUS PAVEMENT
- ASPHALT PAVEMENT
- PROPOSED LIGHT POLE
- 10 FEET BUFFER

LOT COVERAGE

LOT AREA:	42,253 S.F.
IMPERVIOUS SURFACE:	
EXISTING	
PAVED AREA:	14,240 S.F.
BUILDING:	± 8,280 S.F.
TOTAL:	22,520 S.F. ± 53.3%
PROPOSED	
PAVED AREA:	±12,220 S.F.
BUILDING:	11,370 S.F.
TOTAL:	23,590 S.F. ± 55.9%
POROUS PAVEMENT:	±12,900 S.F.

BUILDING SQUARE FOOTAGE

EXISTING:	±8,280 S.F.
DEMOLITION:	±540 S.F.
	±7,740 S.F.
PROPOSED:	±3,630 S.F.
TOTAL:	±11,370 S.F.

PARKING REQUIREMENTS

SECTION 19-2.3(2)
PARKING LOCATION & ACCESS
SECTION 19-2.3(2)(d)
d Primary Street Yard (Min.) Varies 1
1. Primary Street Yard Shall Be 5 Feet Greater Than The Primary Structure Setback
f Side Yard Setback (Min.) 10 Ft
g Rear Yard Setback (Min.) 5 Ft
Driveway Width (Max) 15 Ft

SECTION 19-5.34
1. Sale of any vehicle or boats shall be prohibited.
2. Outdoor area lighting shall be required.
3. Entrance and exit driveways shall have an unrestricted width of not less than 12 feet (one-way), shall not be located closer than 10 feet to any property line and shall be so laid out as to avoid the necessity of any vehicle backing out into any public right-ofway.
4. Vehicle Lifts or pits, dismantled vehicles and all parts and supplies shall be located within a building enclosed at all sides.
5. All service or repair of motor vehicles shall be conducted in a building enclosed on all sides. This requirement shall not be constructed to mean that the doors to any repair shop must be closed at all times.
6. Gasoline or flammable oils in bulk shall be fully stored underground, no nearer than 10 feet to any lot line
7. No commercial sale of gasoline shall be permitted, nor shall any pump be located in front or side yard.

CITY PLANNING BOARD

CITY OF POUGHKEEPSIE, NEW YORK

SITE PLAN APPROVAL

FILE NO.:
PROJECT NAME:
PROJECT LOCATION:
APPLICANT:
OFFICIALLY APPROVED at the Planning Board
Meeting held the ____ day of ____ 2025
PLANNING CHAIR:
DESIGNEE:
DATE SIGNED:
CONDITIONS:

CITY APPROVALS

CITY OF POUGHKEEPSIE, NEW YORK

Date:
Zoning Board Of Appeal: Date:
Fire Chief: Date:
Police Chief: Date:
Building Inspector: Date:
City Engineer Date:
Commissioner of Public Works

OWNER/APPLICANT CERTIFICATION.
THE UNDERSIGNED OWNER OF THE PROPERTY AND APPLICANT STATE THAT THEY ARE FAMILIAR WITH THIS MAP AND ITS CONTENTS HEREBY CONSENT TO ALL TERMS CONDITIONS AS STATED HEREON.. HE/SHE IS FINANCIALLY CAPABLE OF COMPLETING THIS PROJECT.

Date:
OWNER

Dig Safely. New York
Dig Safely and Dig Safely. New York are used under license from Dig Safe System, Inc.
Know what's below. Call 811 before you dig.

NOTES:

1. ALL CONNECTIONS, SEWER, GAS, WATER, ETC. SHALL BE PROPERLY SECURED AND PROTECTED DURING EXCAVATION AND CONSTRUCTION.
2. PRIOR TO START OF EXCAVATION AND CONSTRUCTION, TREES TO BE RETAINED SHALL BE PROTECTED WITH SILT FENCE, SNOW FENCE CONSTRUCTION FENCE OR EQUAL, WHICH WILL BE PLACED AT DRIP LINE OR SEVERAL FEET BEYOND. HOWEVER, THE FENCING SHALL NOT CROSS PUBLIC SIDEWALKS. NO STORAGE OR STOCKPILING OF CONSTRUCTION MATERIALS, DEBRIS OR EQUIPMENT SHALL OCCUR WITHIN THE FENCED AREAS.

DRAWING LIST

SP	PLOT PLAN
SP-1	LANDSCAPE PLAN
SP-2	EROSION CONTROL
P	PICTURES
A 100	ROPOSED PLAN
A 200	EXTERIOR ELEVATIONS
D 100	DEMOLITION PLAN

PROGRESS PRINT

PLAN NOTES:
ANY UNAUTHORIZED ALTERATION OR ADDITION TO THESE PLANS IS A VIOLATION OF THE SECTION 7209 OF THE NEW YORK STATE EDUCATION LAW EXCEPT AS PER SECTION 7209, SUBDIVISION 2.

NO. 2	ZONING REVIEW COMMENTS 8-18-2025
NO. 1	ZONING REVIEW COMMENTS 7-18-2025
REVISION	DATE:

STUDIO 90 DESIGN & PLANNING
4 FERNAN DRIVE, PAWLING, NEW YORK 12564
PHONE: 914-474-2195
Email: studio90@rmsn.com
KENNETH L. KAEFER, R.A.
ALFREDO DI PIETRO, DESIGNER
PETER MARCHETTI, P.E., CONSULTING ENGINEER

© ALL RIGHTS RESERVED. INCLUDING REPRODUCTION IN ANY FORM.

STATE OF NEW YORK · PETER G. MARCHETTI JR. · 061528-1 · LICENSED PROFESSIONAL ENGINEER

PROJECT: INTERIOR ALTERATIONS, PROPOSED ONE STORY ADDITION
PROPOSED SITE PLAN

VINCES AUTO BODY WORKS
185 SMITH STREET
POUGHKEEPSIE, N.Y. 12601

DATE:	5-9-2025
JOB NO.:	25-18
SCALE:	1"=20'
DWG. NO.:	SP

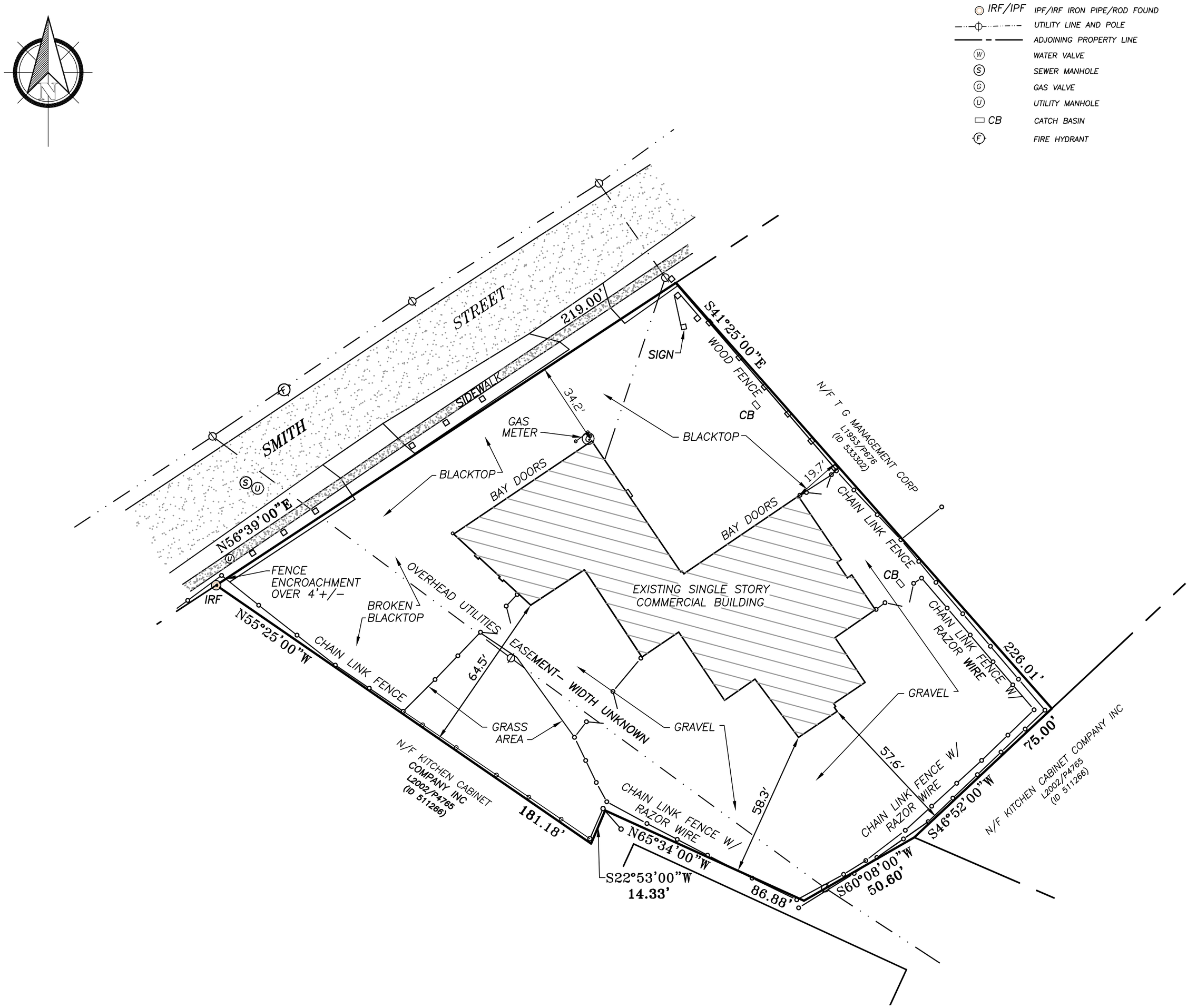

NOTES:

PROPERTY LINE AS SHOWN ARE BASED ON DEEDS OF RECORD AND FILED MAPS.

THIS IS AN ACCURATE SURVEY COMPLETED IN THE FIELD xxxxxx 2021

SUBJECT TO ALL EASEMENTS AND/OR AGREEMENTS THAT THE PUBLIC UTILITY COMPANIES MAY HAVE.

ONLY COPIES FROM THE ORIGINAL OF THIS SURVEY MARKED WITH AN ORIGINAL OF THE LAND SURVEYORS SEAL OR HIS/HER EMBOSSED SEAL SHALL BE CONSIDERED TO BE VALID TRUE COPIES

SUBJECT TO ALL RIGHT OF WAY TAKINGS NOT SHOWN OR FOUND IN COUNTY OR TOWN RECORDS

REFERENCES:

-L2020/P1655

LAND AREA

0.97 ACRES+/-

GRAPHIC SCALE

SCALE: 1" = 30'

0 15 30 45 60

SURVEY FOR

JOSEPH V. LOMORIELLO

CITY OF POUGHKEEPSIE
DUTCHESS COUNTY, NEW YORK

PROJECT TITLE

STEVEN J. GREEN PLS
LICENSE NO. 050565
P.O. BOX 534, GOSHEN, NY 10924
(845) 978-1672

STEVEN J GREEN PLS LICENSE 050565 DATE

UNAUTHORIZED ALTERATION OR ADDITION TO A PLAN BEARING A LICENSED LAND SURVEYOR'S OR PROFESSIONAL ENGINEER'S SEAL IS A VIOLATION OF SECTION 7209, SUB-DIVISION 2 OF THE N.Y. STATE EDUCATION LAW.

SCALE	PROJECT	CAD REFERENCE
1" = 30'	185 SMITH STREET	J21-017
PARCEL ID	DATE:	DWG.NO
510286	3/21/2021	1 of 1

PLANTING NOTES:

1. THE LANDSCAPE PLAN AND RELATED DETAILS ARE FOR LANDSCAPING INFORMATION ONLY. PLEASE REFER TO THE SITE GRADING & EROSION CONTROL PLANS FOR ALL OTHER INFORMATION.

2. THE CONTRACTOR SHALL GUARANTEE THAT ALL PLANTS, TREES AND SHRUBS SHALL BE HEALTHY AND FREE OF DISEASE FOR A PERIOD OF ONE YEAR AFTER SUBSTANTIAL COMPLETION AND ACCEPTANCE BY THE OWNER OR LANDSCAPE ARCHITECT. CONTRACTOR SHALL REPLACE ANY DEAD OR UNHEALTHY PLANTS AT CONTRACTOR'S EXPENSE. FINAL ACCEPTANCE SHALL BE MADE IF ALL PLANTS MEET THE GUARANTEE REQUIREMENTS INCLUDING MAINTENANCE. MAINTENANCE RESPONSIBILITIES INCLUDE CULTIVATING, SPRAYING, WEEDING, WATERING, TIGHTENING, PRUNING, MULCHING AND ANY OTHER OPERATIONS NECESSARY TO MAINTAIN PLANT VIABILITY. MAINTENANCE SHALL BEGIN IMMEDIATELY AFTER PLANTING AND CONTINUE UNTIL THE END OF THE ONE YEAR GUARANTEE PERIOD.

3. THE CONTRACTOR SHALL SUPPLY ALL LABOR, PLANTS AND MATERIALS IN QUANTITIES SUFFICIENT TO COMPLETE THE WORK SHOWN ON THE DRAWINGS AND LISTED IN THE PLANT SCHEDULE 4. ALL SHRUBS SHALL BE MULCHED TO A DEPTH OF 4" WITH SHREDDED HARDWOOD BARK WILLOW.

4. NO PLANT SHALL BE PLACED IN THE GROUND BEFORE ROUGH GRADING HAS BEEN COMPLETED PRIOR TO PLANTING FOR APPROVAL BY THE OWNER OR LANDSCAPE ARCHITECT. STAKING OF THE INSTALLED TREE MUST BE COMPLETED THE SAME DAY AS IT IS INSTALLED. ALL TREES SHALL BE STAKED OR GUYED PER DETAIL. SEE THIS SHEET FOR PLANTING DETAILS.

5. COORDIANATE PLANT MATERIAL LOCATIONS WITH SITE UTILITES. SEE SITE LAYOUT, GRADING AND UTILITY DRAWINGS FOR STORM, SANITARY AND WATER LINES.SEE LIGHTING PLANS FOR ELECTRICAL AND LIGHTING LAYOUT AND DETAILS. UTILITY LOCATIONS ARE APPROPRIATE.EXERCISE CARE WHEN DIGGING IN AREAS OF POTENTIAL CONFLICT WITH UNDERGROUND OR OVERHEAD UTILITIES. THE CONTRACTOR IS RESPONSIBLE FOR ANY DAMAGE DUE TO CONTRACTOR'S NEGLIGENCE AND SHALL REPLACE OR REPAIR ANY DAMAGE AT CONTRACTOR'S EXPENSE.

6. LANDSCAPE PLANTING POTS MUST BE FREE DRAINING, PAVEMENT, COMPACTED SUBGRADE, AND BLASTED ROCK SHALL BE REMOVED FROM MAIN TRAFFIC ISLANDS TO BE LANDSCAPED TO A DEPTH OF 2" OR TO A GREATER DEPTH IF REQUIRED BY PLANTING DETAILS OR EXPECTATIONS. REPLACE SOIL WITHIN ISLANDS WITH MODERATELY COMPACTED LOAM OR SAND LOAM FREE FROM STAKES AND RUBBISH. 1" OR GREATER IN DIAMETER AND ANY OTHER MATERIAL ,HARDWARE TO PLANT GROWTH AND DEVELOPMENT. PLANTING INSTALLATION WITHIN ISLANDS SHALL BE AS DETAILED AND CONTAIN PLANTING DETAILS AS S.PECIFIED.

7. TIME OF PLANTING: NEW PLANT MATERIALS SHALL BE INSTALLED BETWEEN APRIL AND JUNE1 OR AFTER SEPTEMBER 15TH AND NO LATER THAN OCTOBER 31ST.

8. PLANTING SOIL MIXTURE FOR TREES AND SHRUBS: 1 PART PEAT MOSS, 3 PARTS TOPSOIL, FERTILIZER/LIVE (APPLY AS RECOMMENDED BY SOIL ANALYSIS), WYCHORZA INOCULATNT- "TRANSPLANT 1 STEP" AS MANUFACTURED OR ROOTS, INC OR APPROVED EQUAL. USE PER MANUFACUTER'S RECOMMENDATIONS FOR TREES AND SHRUBS

9. TOPSOIL SHALL BE INSTALLED AT A MINIMUM DEPTH OF 6" IN LAWN AREAS. CONTRACTOR SHALL SUBMIT TOPSOIL TO A CERTIFIED TESTING LABORATORY TO DETERMINE Ph, FERTILITY, ORGANIC CONTENT AND MECHANICAL COMPOSITION. THE CONTRACTOR SHALL SUBMIT TEST RESULTS FROM REGIONAL EXTENSION OFFICE OF USDA TO THE OWNER OR LANDSCAPE ARCHITECT FOR REVIEW AND APPROVAL. CONTRACTOR SHALL INCORPORATE AMENDMENTS FOR GOOD PLANT GROWTH AND PROPER SOIL ACIDITY RECOMMENDED FROM THE TOPSOIL TEST.

10. LAWN SEEDING MIXTURE (LOW-WOW): 15% KENTUCKY BLUEGRASS (POA PREATENESS-SINGLE VARIETY); 15% PERENNIAL RYEGRASS (LOUM PERENNE); 30% CREEPING AND FESCLE (FESTUCA RUBRA); 25% CHEWINGS FESCLE(FESTUCA RUBRA JAMESTOWN); 15% HARD FESCLE. SEEDING RATE: 4.5 LBS PER 1000 SF (ADD 10% TO QUANTITY IF HYPERSEEDED). SEEDING DATES: AUGUST 15- OCTOBER 1 AND APRIL 15-JUNE 15, UNLESS OTHERWISE APPROVED BY THE OWNER OR LANDSCAPE ARCHITECT.

11. ALL SLOPES GREATER THAN 30% RECEIVING A GRASS SEEDING SHALL BE COVERED WITH AN EROSION CONTROL BLANKET.

12. ALL DISTURBED AREAS NOT OTHERWISE DEVELOPED SHALL BE SEEDED WITH THE LAWN SEEDING MIXTURE.

GENERAL LANDSCAPING

1. ALL CONSTRUCTION MATERIALS TO BE STORED AT REAR AREA DURING CONSTRUCTION.
2. AUTOMATIC DRIP SYSTEM TO BE INSTALLED IN ALL PLANTING AREAS.
3. OVER-DIG ALL TREE AND SHRUB HOLES TWO TIMES BALL SIZE AND REPLACE WITH MIX OF TOPSOIL AND ORGANIC MATERIAL.
4. MULCH ALL PERENNIAL BEDS WITH AT LEAST THREE INCHES OF ORGANIC MULCH.
5. RE-VEGITATE ALL AREAS TO REMAIN NATIVE WITH NATIVE GRASSES.
6. THERE IS TO BE NO SOD.
7. TRASH TO BE ENCLOSED AT REAR
8. APPLY ROCK OVER 6 MIL PLOY WHERE WATER IS CHANNELED AROUND HOUSE. DESIGN FOR SHEET DRAINAGE WHERE WATER IS NOT CHANNELED.



Nellie Stevens Holly
Ilx "Nellie R. Stevens"



Weeping Cherry Tree
Prunus x 'Snofozam'



Pink Magnolia, Lily Tree
Magnolia Soulangeana

WINTERGREEN BOXWOOD SHRUB



BABY GEM BOXWOOD
Buxus Microphylla Japonica Gregem
TO BE PLANTED AT PROPERTY LINE



Panicle Hydrangeas
Hydrangea Paniculata
TO BE PLANTED IN PLANTERS



English Ivy
Hedera Colchica 'Sulphur Heart'
CLIMBING COVER FOR
EXISTING CHAIN LINK FENCE

TREE LEGEND		
PROPOSED TREES		
NAME	SIZE	QUANTITY
Weeping Cherry	4" Dia.	8
Pink Magnolia	3" Dia	6
Nellie Stevens Holly	3" Dia	7

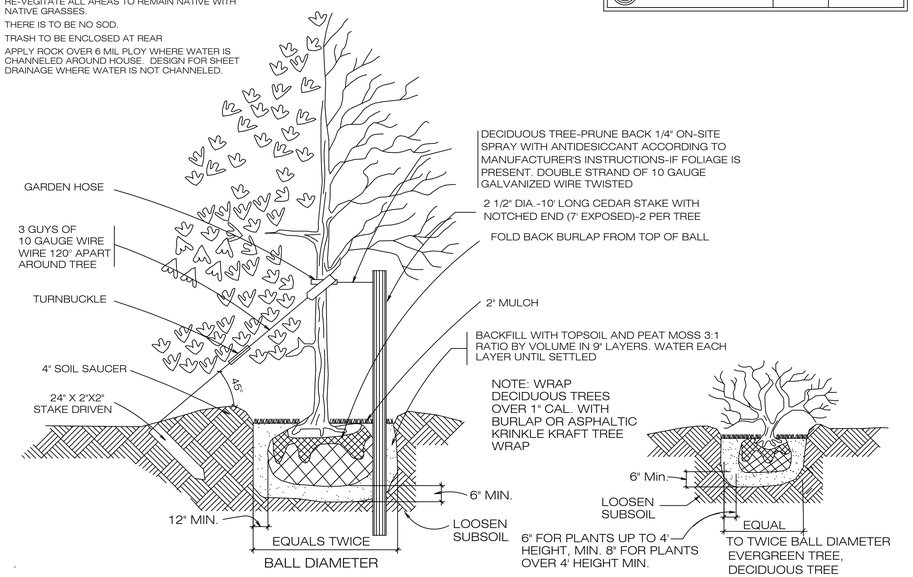

PLANTING DETAILS

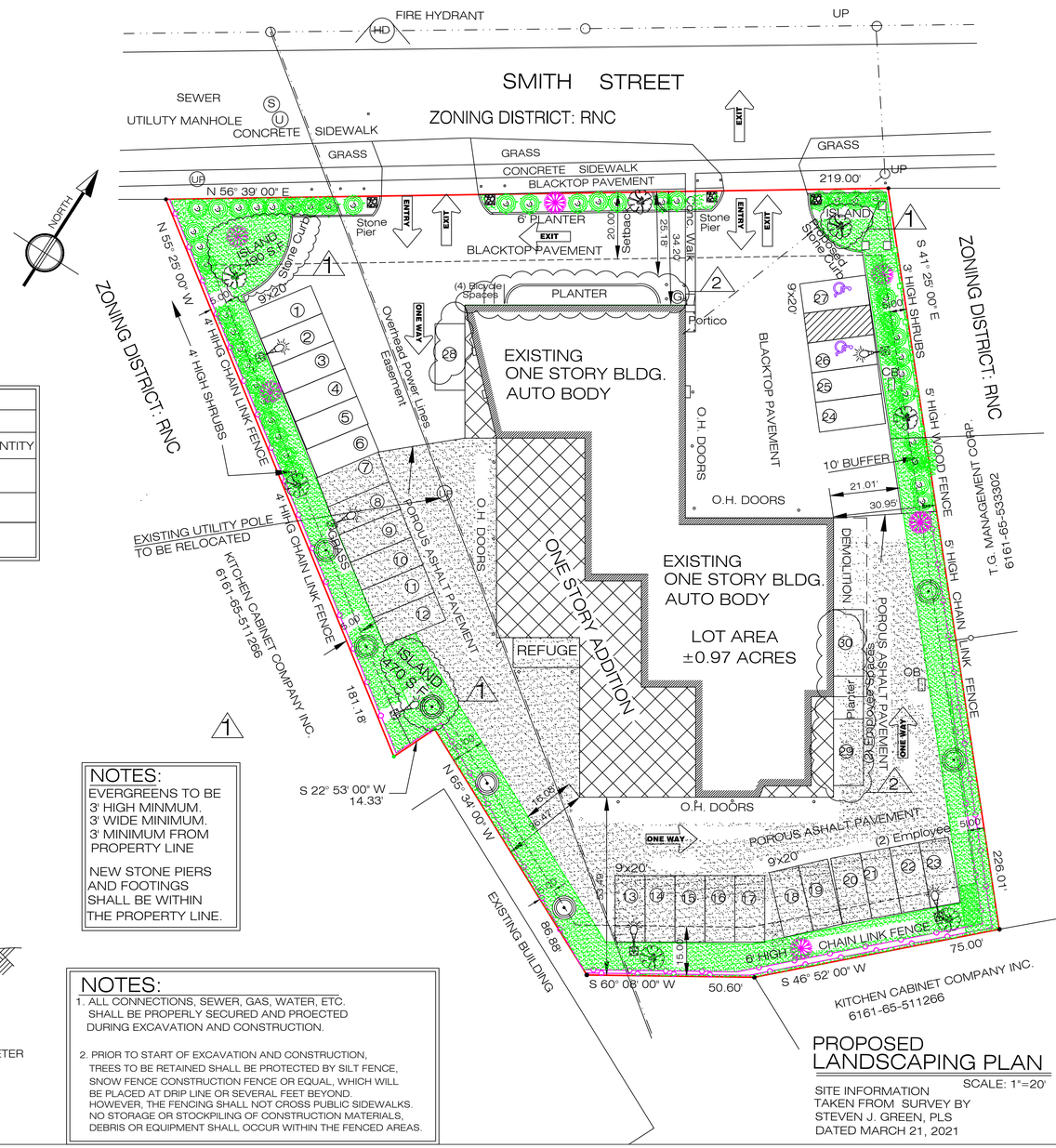

NOTES:
EVERGREENS TO BE 3' HIGH MINMUM.
3' WIDE MINIMUM.
3' MINIMUM FROM PROPERTY LINE

NEW STONE PIERS AND FOOTINGS SHALL BE WITHIN THE PROPERTY LINE.

NOTES:
1. ALL CONNECTIONS, SEWER, GAS, WATER, ETC. SHALL BE PROPERLY SECURED AND PROECTED DURING EXCAVATION AND CONSTRUCTION.

2. PRIOR TO START OF EXCAVATION AND CONSTRUCTION, TREES TO BE RETAINED SHALL BE PROTECTED BY SILT FENCE, SNOW FENCE CONSTRUCTION FENCE OR EQUAL, WHICH WILL BE PLACED AT DRIP LINE OR SEVERAL FEET BEYOND. HOWEVER, THE FENCING SHALL NOT CROSS PUBLIC SIDEWALKS. NO STORAGE OR STOCKPILING OF CONSTRUCTION MATERIALS, DEBRIS OR EQUIPMENT SHALL OCCUR WITHIN THE FENCED AREAS.

PROPOSED LANDSCAPING PLAN

SCALE: 1"=20'

SITE INFORMATION
TAKEN FROM SURVEY BY
STEVEN J. GREEN, PLS
DATED MARCH 21, 2021



185 SMITH STREET
POUGHKEEPSIE, N.Y. 12601
PARCEL TAX ID.: 6162-65-510286

LEGEND

- PROPERTY LINE
- SETBACK LINE
- EXISTING BUILDING
- PROPOSED ADDITION
- UP UTILITY POLE
- CB CATCH BASIN
- RL ROOF LEADER
- LP LIGHT POLE
- HD HYDRANT
- G GAS
- W WATER
- S SEWER
- WOOD FENCE
- CHAIN LINK FENCE
- POROUS PAVEMENT
- ASPHALT PAVEMENT
- PROPOSED LIGHT POLE
- 10 FEET BUFFER
- EXISTING TREES
- EXISTING TREES TO BE REMOVED
- PROPOSED 3' HIGH SHRUBS
- Weeping Cherry Tree
- Pink Magnolia
- Holly

PROGRESS PRINT

PLAN NOTES:
ANY UNAUTHORIZED ALTERATION OR ADDITION TO THESE PLANS IS A VIOLATION OF THE SECTION 7209 OF THE NEW YORK STATE EDUCATION LAW EXCEPT AS PER SECTION 7209, SUBDIVISION 2.

NO.	
NO. 2	ZONING REVIEW COMMENTS 8-18-2025
NO. 1	ZONING REVIEW COMMENTS 7-18-2025
REVISION	DATE:

STUDIO 90 DESIGN & PLANNING
1 FAIRWAY DRIVE, PAWLING, NEW YORK 12564
TEL: 845.235.2564
Email: studio90@mtsn.com
KENNETH L. KAEFER, R.A.
ALFREDO DI PIETRO, P.E., DESIGNER
PETER MARCHETTI, P.E., CONSULTING ENGINEER

© ALL RIGHTS RESERVED. INCLUDING REPRODUCTION IN ANY FORM.

STATE OF NEW YORK · PETER G. MARCHETTI · 081528-1 · LICENSED PROFESSIONAL ENGINEER

PROJECT: INTERIOR ALTERATIONS, PROPOSED ONE STORY ADDITION
LANDSCAPING PLAN.

VINCE'S AUTO BODY
185 SMITH STREET
POUGHKEEPSIE, N.Y. 12601

DATE: 5-9-2025
JOB NO.: 25-18
SCALE: 1"=20'
DWG. NO. SP-1

Short Environmental Assessment Form
Part 1 - Project Information

Instructions for Completing

Part 1 – Project Information. The applicant or project sponsor is responsible for the completion of Part 1. Responses become part of the application for approval or funding, are subject to public review, and may be subject to further verification. Complete Part 1 based on information currently available. If additional research or investigation would be needed to fully respond to any item, please answer as thoroughly as possible based on current information.

Complete all items in Part 1. You may also provide any additional information which you believe will be needed by or useful to the lead agency; attach additional pages as necessary to supplement any item.

Part 1 – Project and Sponsor Information

Name of Action or Project:
VINCE'S AUTOBODY WORKS

Project Location (describe, and attach a location map):
185 SMITH STREET, POUGHKEEPSIE, NEW YORK 12601

Brief Description of Proposed Action:
PROPSED ADDITION AND RENOVATION TO EXISTING AUTOMOBILE REPAIR SHOP.

Name of Applicant or Sponsor:	Telephone: 017 416 7591
DEVANAND JAIKERRAN	E-Mail: into@vincesautobodyworks

Address:
185 SMITH STREET

City/PO:	State:	Zip Code:
POUGHKEEPSIE	NEW YORK	12601

	NO	YES
1. Does the proposed action only involve the legislative adoption of a plan, local law, ordinance, administrative rule, or regulation? If Yes, attach a narrative description of the intent of the proposed action and the environmental resources that may be affected in the municipality and proceed to Part 2. If no, continue to question 2.	☑	☐
2. Does the proposed action require a permit, approval or funding from any other government Agency? If Yes, list agency(s) name and permit or approval: BONING BOARD OF APPEALS, PLANNING BOARD, BUILDING PERMIT	☐	☑

3. a. Total acreage of the site of the proposed action? 0.97 acres
   b. Total acreage to be physically disturbed? 0.084 acres
   c. Total acreage (project site and any contiguous properties) owned or controlled by the applicant or project sponsor? 0.97 acres

4. Check all land uses that occur on, are adjoining or near the proposed action:

5. ☑ Urban ☐ Rural (non-agriculture) ☑ Industrial ☑ Commercial ☑ Residential (suburban)
   ☐ Forest ☐ Agriculture ☐ Aquatic ☐ Other(Specify):
   ☐ Parkland

	NO	YES	N/A
5. Is the proposed action,			
a. A permitted use under the zoning regulations?	☑	☐	☐
b. Consistent with the adopted comprehensive plan?	☐	☑	☐

	NO	YES
6. Is the proposed action consistent with the predominant character of the existing built or natural landscape?	☐	☑

	NO	YES
7. Is the site of the proposed action located in, or does it adjoin, a state listed Critical Environmental Area?		
If Yes, identify: _____	☑	☐

	NO	YES
8. a. Will the proposed action result in a substantial increase in traffic above present levels?	☑	☐
b. Are public transportation services available at or near the site of the proposed action?	☐	☑
c. Are any pedestrian accommodations or bicycle routes available on or near the site of the proposed action?	☑	☐

	NO	YES
9. Does the proposed action meet or exceed the state energy code requirements?		
If the proposed action will exceed requirements, describe design features and technologies:		
THE R- RATIONG WILL BE ABOVE THE NEW YORK STATE ENERGY CONSTRUCTION CODE REQUIREMENTS.	☐	☑
_____		

	NO	YES
10. Will the proposed action connect to an existing public/private water supply?		
If No, describe method for providing potable water: _____	☐	☑
_____		

	NO	YES
11. Will the proposed action connect to existing wastewater utilities?		
If No, describe method for providing wastewater treatment: _____		
THE PROPOSED ADDITION STORMWATER MANAGEMENT WILL TREATED WITH CULTEC SYSTEM	☐	☑
_____		

	NO	YES
12. a. Does the project site contain, or is it substantially contiguous to, a building, archaeological site, or district which is listed on the National or State Register of Historic Places, or that has been determined by the Commissioner of the NYS Office of Parks, Recreation and Historic Preservation to be eligible for listing on the State Register of Historic Places?	☑	☐
b. Is the project site, or any portion of it, located in or adjacent to an area designated as sensitive for archaeological sites on the NY State Historic Preservation Office (SHPO) archaeological site inventory?	☑	☐

	NO	YES
13. a. Does any portion of the site of the proposed action, or lands adjoining the proposed action, contain wetlands or other waterbodies regulated by a federal, state or local agency?	☑	☐
b. Would the proposed action physically alter, or encroach into, any existing wetland or waterbody?	☑	☐
If Yes, identify the wetland or waterbody and extent of alterations in square feet or acres: _____		
_____		
_____		

14. Identify the typical habitat types that occur on, or are likely to be found on the project site. Check all that apply:

☐ Shoreline ☐ Forest ☐ Agricultural/grasslands ☐ Early mid-successional

☐ Wetland ☑ Urban ☑ Suburban

	NO	YES
15. Does the site of the proposed action contain any species of animal, or associated habitats, listed by the State or Federal government as threatened or endangered?	☑	☐
16. Is the project site located in the 100-year flood plan?	☑	☐
17. Will the proposed action create storm water discharge, either from point or non-point sources?	☑	☐
If Yes,		
a. Will storm water discharges flow to adjacent properties?	☑	☐
b. Will storm water discharges be directed to established conveyance systems (runoff and storm drains)?	☑	☐
If Yes, briefly describe: _____ _____		
18. Does the proposed action include construction or other activities that would result in the impoundment of water or other liquids (e.g., retention pond, waste lagoon, dam)?	☑	☐
If Yes, explain the purpose and size of the impoundment: _____ _____		
19. Has the site of the proposed action or an adjoining property been the location of an active or closed solid waste management facility?	☑	☐
If Yes, describe: _____ _____		
20. Has the site of the proposed action or an adjoining property been the subject of remediation (ongoing or completed) for hazardous waste?	☐	☑
If Yes, describe: _____ MOTOR OIL _____		

I CERTIFY THAT THE INFORMATION PROVIDED ABOVE IS TRUE AND ACCURATE TO THE BEST OF MY KNOWLEDGE

Applicant/sponsor/name: Devanand Jaikarran Date: 9-25-2025

Signature: Devanand Jaikarran Title: President

PRINT FORM

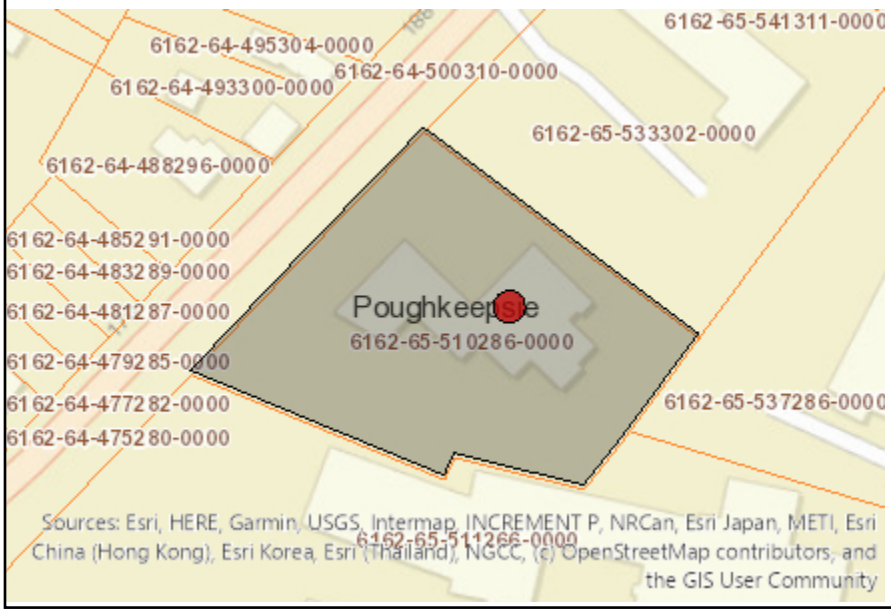

Disclaimer: The EAF Mapper is a screening tool intended to assist project sponsors and reviewing agencies in preparing an environmental assessment form (EAF). Not all questions asked in the EAF are answered by the EAF Mapper. Additional information on any EAF question can be obtained by consulting the EAF Workbooks. Although the EAF Mapper provides the most up-to-date digital data available to DEC, you may also need to contact local or other data sources to confirm data provided by the Mapper or to obtain data not provided by the Mapper.



Part 1 / Question 7 [Critical Environmental Area]	No
Part 1 / Question 12a [National or State Register of Historic Places or State Eligible Sites]	No
Part 1 / Question 12b [Archeological Sites]	No
Part 1 / Question 13a [Wetlands or Other Regulated Waterbodies]	Digital mapping data are not available or are incomplete. Refer to EAF Workbook.
Part 1 / Question 15 [Threatened or Endangered Animal]	No
Part 1 / Question 16 [100 Year Flood Plain]	No
Part 1 / Question 20 [Remediation Site]	Yes

e. Does the project site contain, or is it substantially contiguous to, a building, archaeological site, or district which is listed on the National or State Register of Historic Places, or that has been determined by the Commissioner of the NYS Office of Parks, Recreation and Historic Preservation to be eligible for listing on the State Register of Historic Places? ☐ Yes ☐ No

If Yes:

i. Nature of historic/archaeological resource: ☐ Archaeological Site ☐ Historic Building or District

ii. Name: _____

iii. Brief description of attributes on which listing is based:

_____

f. Is the project site, or any portion of it, located in or adjacent to an area designated as sensitive for archaeological sites on the NY State Historic Preservation Office (SHPO) archaeological site inventory? ☐ Yes ☐ No

g. Have additional archaeological or historic site(s) or resources been identified on the project site? ☐ Yes ☐ No

If Yes:

i. Describe possible resource(s): _____

ii. Basis for identification: _____

h. Is the project site within fives miles of any officially designated and publicly accessible federal, state, or local scenic or aesthetic resource? ☐ Yes ☐ No

If Yes:

i. Identify resource: _____

ii. Nature of, or basis for, designation (e.g., established highway overlook, state or local park, state historic trail or scenic byway, etc.): _____

iii. Distance between project and resource: _____ miles.

i. Is the project site located within a designated river corridor under the Wild, Scenic and Recreational Rivers Program 6 NYCRR 666? ☐ Yes ☐ No

If Yes:

i. Identify the name of the river and its designation: _____

ii. Is the activity consistent with development restrictions contained in 6NYCRR Part 666? ☐ Yes ☐ No

F. Additional Information

Attach any additional information which may be needed to clarify your project.

If you have identified any adverse impacts which could be associated with your proposal, please describe those impacts plus any measures which you propose to avoid or minimize them.

G. Verification

I certify that the information provided is true to the best of my knowledge.

Applicant/Sponsor Name _____ Date _____

Signature [signature] Title President

PRINT FORM

SITE NOTES

1. CONTRACTOR SHALL CHECK AND VERIFY BUILDING LOCATION FOR COMPLIANCE WITH BUILDING CODE AND ZONING REGULATIONS.
2. CONTRACTOR MUST VERIFY EXISTING GRADES, CONDITIONS, LOCATION OF EASEMENTS, PROPERTY LINES, ETC..
3. ALL UTILITY CONNECTIONS SHALL COMPLY WITH APPLICABLE LOCAL, STATE AND UTILITY CODES. ALL NEW AND EXISTING FINISHED GRADES SHALL SLOPE AWAY FROM HOUSE.
4. ALL WORK SHALL COMPLY WITH CITY OF POUGHKEEPSIE CODE, STATE CODES, AND ANY OTHER CODES AS APPLICABLE
5. ALL DISTURBED AREAS SHALL BE RESTORED TO ORIGINAL STATE.
6.. ALL DISTURBED AREAS SHALL BE RESTORED TO ORIGINAL STATE.

DISTURBED SOIL SHALL BE SEEDED, RESTORED TO MACH EXISTING GROUND COVER. RESTORATION WORK SHALL MEET CITY OF POUGHKEEPSIE STANDARDS

SILT FENCE NOTES:

1. SILT FENCE SHALL CONFORM TO CITY OF POUGHKEEPSIE, N.Y.S . STANDARDS AND SPECIFICATIONS FOR EROSION AND SEDIMENT CONTROL, AND ANY OTHER LEAD AGENCY SPECIFICATIONS
2. STEEL POSTS (OR APP. EQ.) WHICH SUPPORT THE SILT FENCE SHALL BE INSTALLED ON A SLIGHT ANGLE TOWARD THE ANTICIPATED RUNOFF SOURCE. POST MUST BE EMBEDDED A MIN. OF ONE (1') FOOT.
3. THE TOE OF THE SILT FENCE SHALL BE TRENCHED IN WITH A SPADE OR MECHANICAL TRENCHER, SO THAT THE DOWNSLOPE FACE OF THE TRENCH IS FLAT AND PERPENDICULAR TO THE LINE OF FLOW. WHERE FENCE CANNOT BE TRENCHED IN (E.G. PAVEMENT) WEIGHT FABRIC FLAP WITH WASHED STONE
4. THE TRENCH MUST BE A MINIMUM OF 6 INCHES DEEP AND 6 INCHES WIDE TO ALLOW FOR THE SILT FENCE FABRIC TO BE LAID IN THE GROUND AND BACKFILLED WITH COMPACTED MATERIAL.
5. SILT FENCE SHALL BE SECURELY FASTENED TO EACH STEEL SUPPORT POST (OR APP. EQ.) OR TO WOVEN WIRE, WHICH IN TURN IS SECURELY FASTENED TO THE STEEL FENCE POSTS (OR APP. EQ.) WITH WIRE TIES OR STAPLES. POSTS SHALL BE STEEL EITHER "T" OR "U" TYPE ON HARDWOOD.
6. INSPECTION SHALL BE MADE WEEKLY OR AFTER EACH RAINFALL EVENT AND REPAIR OR REPLACEMENT SHALL BE MADE PROMPTLY AS NEEDED.
7. SILT FENCE SHALL BE REMOVED WHEN THE SITE IS COMPLETELY STABILIZED SO AS NOT TO BLOCK OR IMPEDE STORM FLOW OR DRAINAGE.
8 ACCUMULATED SILT SHALL BE REMOVED WHEN IT REACHES A DEPTH OF 6 INCHES. THE SILT SHALL BE DISPOSED OF IN AN APPROVED SITE AND IN SUCH A MANNER AS TO NOT CONTRIBUTE TO ADDITIONAL SILTATION.
9. FILTER CLOTH TO BE FASTENED SECURELY TO WOVEN WIRE FENCE WITH TIES SPACED EVERY 24" AT TOP AND MID SECTION. FENCE SHALL BE WOVEN WIRE 6" MAXIMUM MESH OPENING.
10. WHEN TWO SECTIONS OF FILTER FABRIC ADJOIN EACH OTHER THEY SHALL BE OVERLAPPED BY 6" AND FOLDED. FILTER CLOTH SHALL BE OF APPROVED MATERIAL.
11. PREFAB UNITS SHALL BE GEOFAB, ENVIROFENCE, OR EQUAL.

SEDIMENT AND EROSION CONTROL NOTES:

1. LOCATIONS SHOWN FOR EROSION CONTROL ARE APPROXIMATE.
2. A SEDIMENT BARRIER SHALL BE ERECTED AROUND THE DOWN SLOPE PERIMETER OF ALL CONSTRUCTION ACTIVITIES.
3. CUT AND/OR FILL SLOPES OF GREATER THAN 2 ON 1 REMAINING IN ROUGH GRADE SHALL BE MULCHED AND SEEDED.
4. THE AMOUNT OF NATURAL VEGETATION SHALL BE MINIMIZED.
5. ALL STOCKPILES LEFT FOR MORE THAN ONE MONTH SHALL BE RINGED WITH SEDIMENT BARRIERS.
6. SEDIMENT REMOVED FROM CONTROL STRUCTURES WILL BE PLACED IN AN APPROVED SITE, A SUFFICIENT DISTANCE FROM ALL CONTROLLED ENVIRONMENTS.
7. EMERGENCY EROSION CONTROL MEASURES OF SILT FENCE, MULCH AND OR HAY BALES SHALL BE STOCKPILED ON SITE FOR USE IN STABILIZING DISTURBED AREAS IN ADVANCE OF SEVERE WEATHER CONDITIONS.
8. UPON FINAL GRADING THE OPEN SOIL HORIZONS SHALL BE IMMEDIATELY PLACED IN SEED.
9. CONSTRUCTION ENVELOPES ARE TO BE DELINEATED WITH HIGH VISIBLE BARRICADE TAPE, SNOW FENCE OR PLASTIC NETTING.
10. TREES IN CLOSE PROXIMITY TO CONSTRUCTION ARE TO BE PROTECTED WITH SNOW FENCE OR A COMPATIBLE BARRIER PLACED AT DRIPLINE.
11. UTILITY TRENCHES ARE TO BE COMPACTED, SEEDED AND MULCHED WITHIN 14 DAYS AFTER BACKFILLING.
12. PROVIDE A STABILIZED PAD OF 1 1/2" STONE AT THE CONSTRUCTION AREA.
13. INSTALL EROSION CONTROL MEASURES ALONG GRADING AND ANY OTHER ACTIVITY AND SHALL CONFORM TO TOWN OF HARRISON REGULATIONS.
14. ALL WORK SHALL COMPLY WITH: CURRENT EDITION OF "N.Y.S. AND DUTCHESS COUNTY BEST MANAGEMENT PRACTICE MANUAL FOR EROSION AND SEDIMENT CONTROL." NEW YORK STATE STORMWATER MANAGEMENT DESIGN MANUAL, AND ANY OTHER CODES AS APPLICABLE.

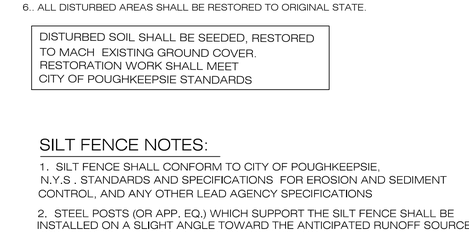

TEMPORARY MATERIAL STOCKPILE

1. TEMPORARY MATERIAL STOCKPILE STABILIZATION MEASURE INCLUDE VEGETATIVE COVER, MULCH, NON-VEGETATIVE COVER AND PERIPHERAL SEDIMENTS TRAPPING BARRIERS.
2. THE STABILIZATION MEASURE SELECTED SHOULD BE APPROPRIATE FOR TIME OF THE YEAR, SITE CONDITIONS, AND REQUIRED DURATION OF USE.
3. AREA CHOSEN SHALL BE DRY, AND STABLE.
4. MAXIMUM SLOPE SHALL BE 1:2
5. UPON STABILIZATION OF SOIL STOCKPILING, EACH PILE SHALL BE BE SURROUNDED WITH EITHER SILT FENCE OR STRAW BALES THEN STABILIZED WITH VEGETATION OR COVER.

Dig Safely. New York
Dig Safely and Dig Safely. New York are used under license from Dig Safe System, Inc.
Know what's below.
Call 811 before you dig.

RECOMMENDED TOE-IN METHOD.

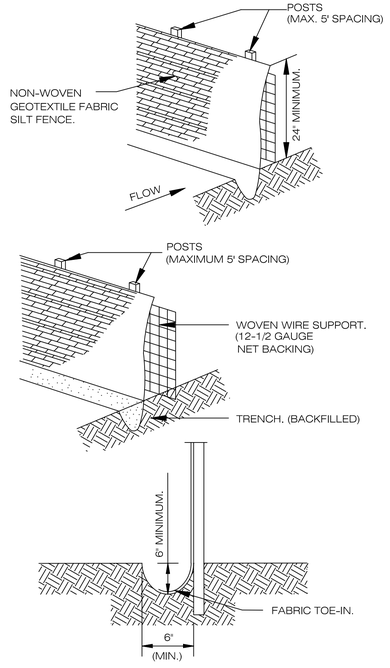

SILT FENCE AND NOTES

N.T.S

LOT COVERAGE

LOT AREA:	42,253 S.F.
IMPERVIOUS SURFACE:	
EXISTING	
PAVED AREA:	14,240 S.F.
BUILDING:	± 8,280 S.F.
TOTAL:	22,520 S.F. ± 53.3%
PROPOSED	
PAVED AREA:	±12,220 S.F.
BUILDING:	11,370 S.F.
TOTAL:	23,590 S.F. ± 55.9%
POROUS PAVEMENT:	±12,900 S.F.

BUILDING SQUARE FOOTAGE

EXISTING:	±8,280 S.F.
DEMOLITION:	±540 S.F.
	±7,740 S.F.
PROPOSED:	±3,630 S.F.
TOTAL:	±11,370 S.F.

NOTES:

1. ALL CONNECTIONS, SEWER, GAS, WATER, ETC. SHALL BE PROPERLY SECURED AND PROECTED DURING EXCAVATION AND CONSTRUCTION.
2. PRIOR TO START OF EXCAVATION AND CONSTRUCTION, TREES TO BE RETAINED SHALL BE PROTECTED BY SILT FENCE, SNOW FENCE CONSTRUCTION FENCE OR EQUAL, WHICH WILL BE PLACED AT DRIP LINE OR SEVERAL FEET BEYOND. HOWEVER, THE FENCING SHALL NOT CROSS PUBLIC SIDEWALKS. NO STORAGE OR STOCKPILING OF CONSTRUCTION MATERIALS, DEBRIS OR EQUIPMENT SHALL OCCUR WITHIN THE FENCED AREAS.

NOTE:

NEW PAVEMENT SHALL MEET N.Y.S. CODES, CITY OF POUGHKEEPSIE CODE AND STANDARDS. DISTURBED AREAS SHALL BE RESTORED TO ORIGINAL STATE.

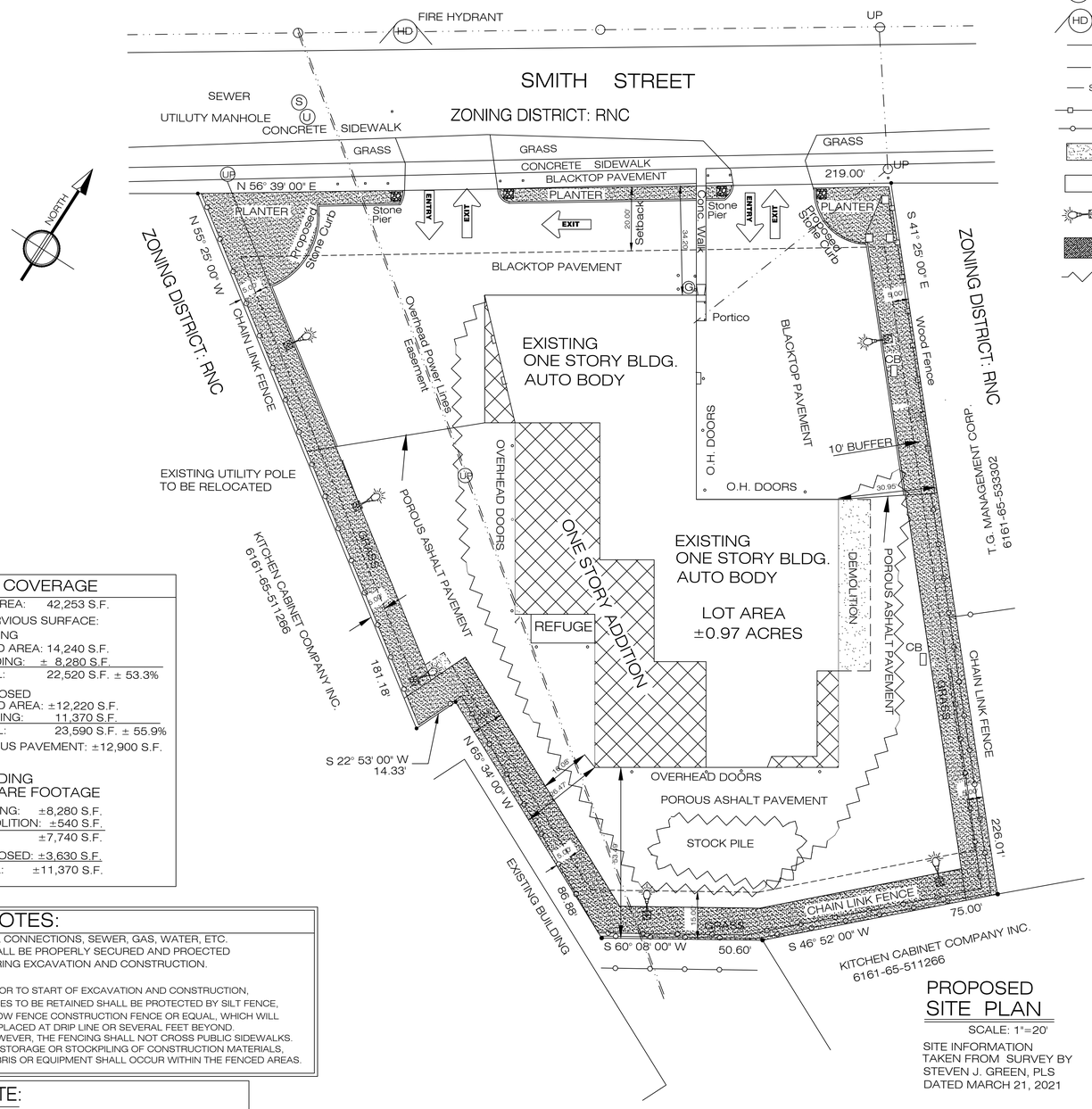

PROPOSED SITE PLAN

SCALE: 1"=20'

SITE INFORMATION TAKEN FROM SURVEY BY STEVEN J. GREEN, PLS DATED MARCH 21, 2021

PROGRESS PRINT

NOTE:
ANY UNAUTHORIZED ALTERATION OR ADDITION TO THESE PLANS IS A VIOLATION OF THE SECTION 7209 OF THE NEW YORK STATE EDUCATION LAW EXCEPT AS PER SECTION 7209, SUBDIVISION 2.

LEGEND

- PROPERTY LINE
- SETBACK LINE
- EXISTING BUILDING
- PROPOSED ADDITION
- UP — UTILITY POLE
- CB — CATCH BASIN
- RL — ROOF LEADER
- LP — LIGHT POLE
- HD — FIRE HYDRANT
- G — GAS
- W — WATER
- S — SEWER
- WOOD FENCE
- CHAIN LINK FENCE
- POROUS PAVEMENT
- ASPHALT PAVEMENT
- PROPOSED LIGHT POLE
- 10 FEET BUFFER
- SILT FENCE

REVISION	DATE:
NO. 2	ZONING REVIEW COMMENTS 8-18-2025
NO. 1	ZONING REVIEW COMMENTS 7-18-2025

STUDIO 90 DESIGN & PLANNING
4 FAIRWAY DRIVE, PAWLING, N. Y. 12564
TEL. 845 239 1456
Email: studio90@mtsn.com
KENNETH L. KAEFER, R.A.
ALFREDO DI PIETRO, DESIGNER
PETER MARCHETTI, P.E., CONSULTING ENGINEER

© ALL RIGHTS RESERVED. INCLUDING REPRODUCTION IN ANY FORM

STATE OF NEW YORK — PETER G. MARCHETTI — 061529 — REGISTERED PROFESSIONAL ENGINEER

PROJECT: INTERIOR ALTERATIONS, PROPOSED ONE STORY ADDITION

EROSION CONTROL

VINCES AUTO BODY WORKS
185 SMITH STREET
POUGHKEEPSIE, N.Y. 12601

DATE: 5-9-2025
JOB NO.: 25-18
SCALE: 1"=20'
DWG. NO. SP-2



WOOD FENCE



CHAIN LINK FENCE



NORTH -FRONT



NORTH-WEST



NORTH-EAST



185 SMITH STREET



SMITH STREET WEST



SMITH STREET EAST

NO. 1	ZONING REVIEW COMMENTS 7-18-2025
REVISION	DATE:

STUDIO 90 DESIGN & PLANNING
4 FAIRWAY DRIVE, PAWLING, NEW YORK 12564
TEL. 845 239 1456
Email: studio90@msn.com
KENNETH L. KAEFER, R.A.
ALFREDO DI PIETRO, DESIGNER
PETER MARCHETTI, P.E., CONSULTING ENGINEER

© ALL RIGHTS RESERVED, INCLUDING REPRODUCTION IN ANY FORM.

PROJECT: INTERIOR ALTERATIONS, PROPOSED ONE STORY ADDITION
PICTURES

VINCE'S AUTO BODY WORKS
185 SMITH STREET
POUGHKEEPSIE, N.Y. 12601

DATE: 5-9-2025
JOB NO.: 25-18
SCALE: NONE
DWG. NO. PICTURES

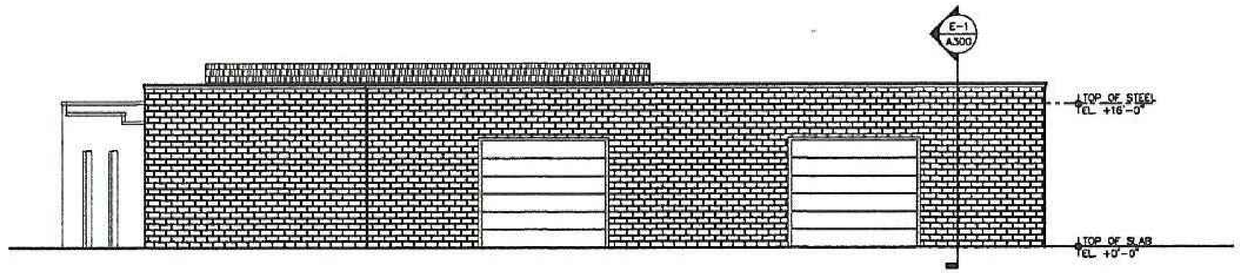

A-1 WEST ELEVATION
1/4"=1'-0"

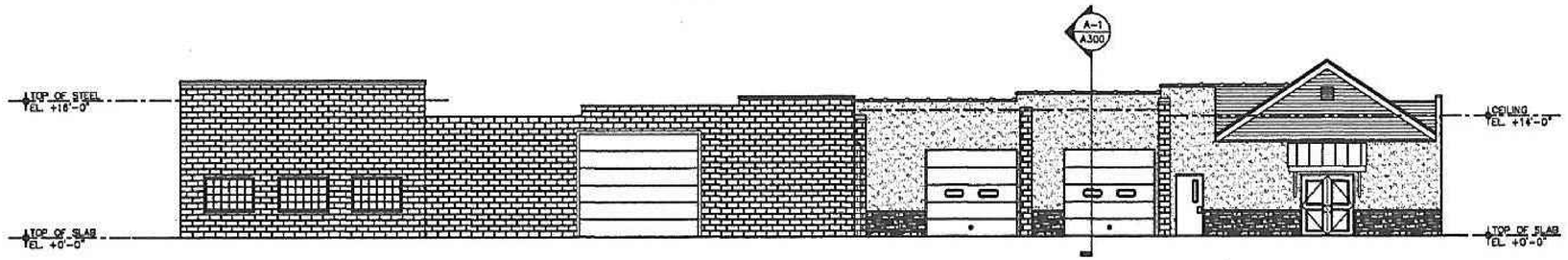

A-1 WEST ELEVATION
1/4"=1'-0"

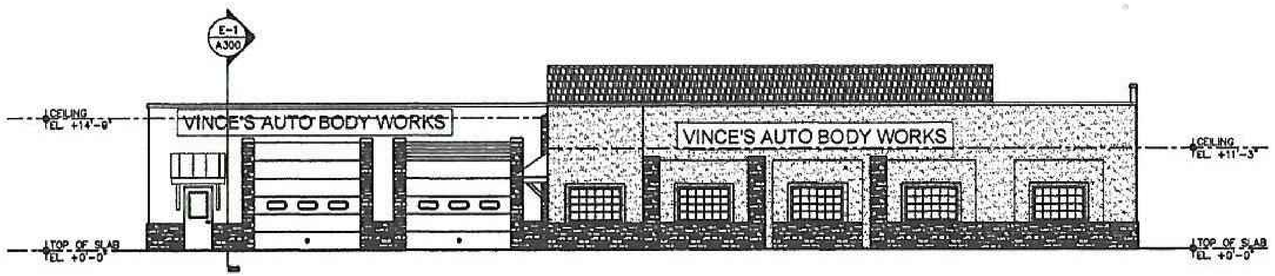

A-1 WEST ELEVATION
1/4"=1'-0"

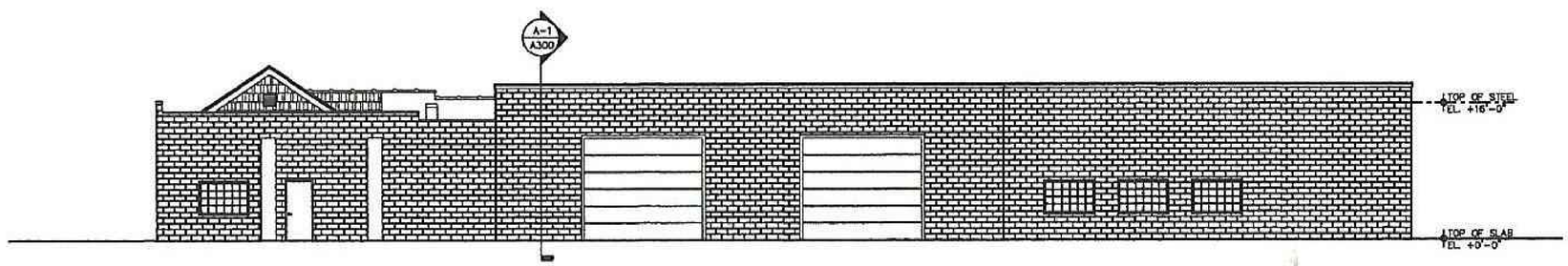

A-1 NORTH ELEVATION
1/4"=1'-0"

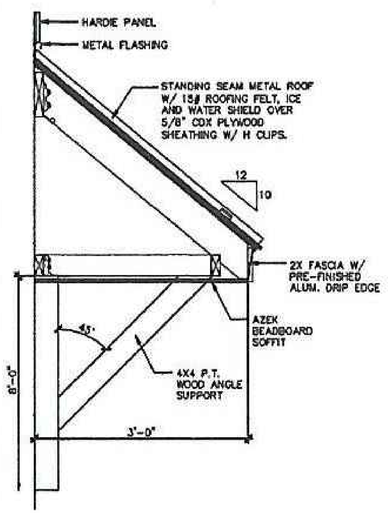

A-13 SHED CANOPY DETAIL
1"=1'-0"

KEY NOTES:

DAY | STOKOSA
ENGINEERING P.C.

3 Van Wyck
Wappingers Falls, New York
(845)-223-3202

CBK Engineering P.C.
129 Clove Branch Road Suite 104
Hopewell Junction, N.Y. 12533
T (914) 509-6557 F (914) 509-8162

No.	REVISION/SUBMISSION	DATE
1		

Liscum McCormack VanVoorhis
ARCHITECTURE PLANNING INTERIORS
181 CHURCH STREET
POUGHKEEPSIE, NEW YORK 12601
PHONE 845-452-2268 FAX 845-452-3752

PROJECT
VINCE'S AUTOBODY
185 SMITH STREET,
POUGHKEEPSIE, NY

DRAWING
EXTERIOR ELEVATIONS

REGISTERED ARCHITECT MICHAEL T.J. McCORMACK No. 018223-1 STATE OF NEW YORK

DRAWN BY	PROJECT NUMBER
KY	22131
CHECKED BY	DATE
MM	7-15-25

DRAWING NUMBER
A200

FILE
P:\2000\JOB # - JOB NAME\

CITY OF POUGHKEEPSIE
DEVELOPMENT DEPARTMENT
JANUARY 27, 2026

185 SMITH STREET: SITE PLAN
Application for the proposed expansion of an existing automobile repair shop and accessory parking lot. Owner: Ricky Autobody Inc. Applicant: Devanand Jaikarran; Consultant: Studio 90 Design & Planning; Grid # 6162-65-510286; Zoning District: R&D; File #PB2025-112

Project Description
The project has been determined to be an Unlisted Action under SEQRA.

Recommendation
- It is recommended that a coordinated SEQRA review of this project be carried out and the Planning Board declare lead agency pursuant to SEQRA.
- The project requires several area variances regarding setbacks, non-street facing primary entrance, landscaping, parking and width of parking access. The project also requires a use variance for the expansion of a nonconforming building in excess of 25% of its area.
- Expansion of non conforming uses are subject to planning board approval provided that the finds that "such expansion will not diminish the compatibility of said building with the existing or potential use of immediately adjacent properties."
    - Property is within and adjacent to properties in the RNC district permitting multifamily residences, and across the street from the RNB zoning district permitting one and two family residences.
    - Current adjacent uses include light industrial uses, single family homes and an apartment complex.

Project History
- First Appearance 1/27/26

Documents Entered into Record

Date	Description	Author	Comments
9/26/25	Application	Devanand Jaikarran	Site plan application addition
9/26/25	Survey	Steven Green PLS	3/21/21 Unsigned
9/26/25	SEQRA	Devanand Jaikarran	EAF Part I
9/26/25	Site Plan	Studio 90 Design&Planning	7/18/25 Plot Plan, SP-1, SP-2, Pictures,
9/26/25	Site Plan	Day Stokosa & LMV	7/15/25 A100, A2200, D100

Comments Received

Date	Author	Comments
	Vincent Parise, Deputy Fire Chief	
	Engineering Department	
	Captain John Zeltman, COP PD	
	Eric Philipp, COP Bldg Inspector	
	Dylan Tuttle, DC Dept of Planning	

Motions and Resolutions
With regard to the City's file number #PB2025-112 and 185 Smith Street

The Planning Board declares lead agency pursuant to SEQRA.
Motion:
Second:
Vote:

APPLICATION TO THE PLANNING BOARD
CITY OF POUGHKEEPSIE, NEW YORK

Application for Site Plan, Special Permit & Facade Approval

OFFICE USE ONLY

CODE: PLSF

ID #_____

FEE: _____
Total, from:
$500, plus
$_____
($150 per 1000 square feet of floor area), plus
$_____
($35 per number of required parking spaces), plus
$_____
($500 for special permit, if applicable)

I. PROPERTY ADDRESS: 16 PERSHING AVENUE

II. PROPERTY OWNER: AJ AUTOBODY LLC
ADDRESS: 16 PERSHING AVENUE
POUGHKEESIE
NEW YORK 12601 (state and zip code)
PHONE NUMBER: 917 416 7591 (include area code)

III. NAME OF APPLICANT: DEVANAND JAIKARRAN
ADDRESS: SAME AS ABOVE
PHONE NUMBER:
EMAIL ADDRESS:

(If applicant is NOT the owner, proof of owner's consent to the application MUST be provided.)

IV. CONSULTANT: STUDIO 90 DESIGN & PLANNING
ADDRESS: 4 FAIRWAY DRIVE
PAWLING, N.Y. 12564
NEW YORK 12564 (state and zip code)
PHONE NUMBER: 845 239 1456 (include area code)
EMAIL ADDRESS:

V. PROPOSED USE or FAÇADE CHANGE (Summarize proposed use or uses):
PROPOSED ADDITION TO EXISTING AUTOMOBILE REPAIR SHOP

VI. ZONING DISTRICT: MU5

(Proceed to XVII for special permit & façade approval only)

Revised January 2025: Previous Editions Obsolete

PROJECT INFORMATION

New construction:_____(yes)__X__(no)

Change of use:_____(yes)_____X_____(no)

Expansion/addition:__X__(yes)_____(no)

Alteration:__X__(yes)_____(no)

Cost of Construction: $_____

LOT AND BULK INFORMATION:

Lot area: 1.30 (acres) 56,628 (square feet)

Building Footprint: _____(proposed square feet for new construction)

7,696 (existing square feet for change of use/expansion)

4,864 (additional proposed square feet for expansion)

12,560 (total building footprint, square feet)

Lot Coverage: 22.2% (percentage, building coverage only)

Gross Floor Area: _____(proposed square feet for new construction)

7,696 (existing square feet for change of use/expansion)

4,864 (additional proposed square feet for expansion)

12,560 (total gross floor area, square feet)

Building Height: ONE (stories) 24 (feet)

Floor Area Ratio: 0.22 (ratio of gross floor area divided by lot area)

VIII. PROJECT PARKING INFORMATION

A) Number of Off-Street Parking Spaces required: 30

B) Number of Off-Street Parking Spaces provided: 35

C) Waiver Requested:_____(Yes) X (No)

Is municipal parking available within 600 feet? _____(Yes) X (No)

If yes, name all such municipal facilities: _____

_____

_____

(If a waiver is requested based on proximity to municipal facilities, a written request for such waiver, addressed to the City Planning Staff and the Chairman of the Planning Board, must be submitted with the application.)

If a private parking facility is to be utilized, is such facility within 600 feet?

_____ (Yes) (No)

If yes, provide the address of the facility, name of the property owner, number of spaces in the lot, number of spaces available for lease, and length of lease. Attach copy of lease. Additional information may be required by the Planning Board): _____

_____

_____

_____

IX. RESIDENTIAL PROPOSALS

A) Type of Development: _____
(Townhouse, condominium, multiple residence rental, etc.)

B) Unit Breakdown:

Number of efficiency or "studio" units: _____

Number of one (1) bedroom units: _____

Number of two (2) bedroom unit's _____

Number with three or more bedrooms: _____

Total number of units: _____

C) Is funding public?____Yes_____No

If yes, describe funding source: _____

X. OFFICE PROPOSALS (____Medical/Dental_____Professional_____Business)

A) Number of Employees: _____

B) Number of doctors/dentists/medical practitioners: _____

C) Days/Hours of Operation: _____

XI. SERVICE BUSINESS PROPOSALS

A) Specify Business: _____
(e.g., laundromat, drycleaner, beauty parlor, travel agency, banks)

B) Number of Employees: _____

C) Number of Washing Machines (for laundromat): _____

D) Days/Hours of Operation: _____

XII. MERCANTILE PROPOSALS (Retail_____Wholesale_____)

A) Type of Mercantile (specify): _____

B) Number of Employees: _____

C) Days/Hours of Operation: _____

XIII. STANDARD RESTAURANT/FAST FOOD RESTAURANT/COFFEE SHOP/DONUT SHOP/NIGHTCLUB/DISCOTHEQUE/BAR PROPOSALS

A) Specify Use: _____

B) Number of seats (excluding bar stools and outdoor seating):_____

C) Meals served (i.e., breakfast, lunch, dinner): _____

D) Type of Menu: _____

E) Days/Hours of Operation: _____

F) Entertainment (live and/or recorded):_____

G) Will the restaurant contain a bar/lounge?: _____Yes_____No

H) If yes, how many seats at the bar? _____

I) Is a drive-through window proposed? _____

J) Is a walk-up window proposed? _____

K) Is an outdoor seating area proposed? _____

L) If yes, how many seats are proposed? _____

M) If yes, is outdoor cooking proposed? _____

XIV. INDUSTRIAL/COMMERCIAL PROPOSALS (Automobile repair, taxi, motor vehicle sales, warehouse, manufacturing, animal hospital, research facilities, etc.)

A) Specify Use: AUTOMOBILE REPAIR

B) Number of shifts (if any): ONE

C) Number of employees: 8
(If shifts are proposed, list number of employees per shift)

E) Number of work bays (if automobile repair): 5

F) Days/Hours of operation: Monday-Friday 8AM 5PM Saturday 9 AM 12 Noon

XV. EDUCATIONAL/INSTITUTIONAL/RECREATIONAL PROPOSALS (e.g., Museums, Theatres, Conference Centers, Hotels, Motels, Hospitals, Nursing Homes, Assisted Living Facilities, Nursery Schools, Private Schools, Day Care Centers, Places of Worship, Marinas, Membership Clubs, etc.)

A) Specify: _____

B) Number of shifts (if any): _____

C) Number of employees: _____
(If shifts are proposed, list number of employees per shift)

D) Number of beds (hospitals, nursing homes, etc): _____

E) Number of seats in largest assembly space: _____

F) Number of classrooms (schools): _____

G) Number of rental units (hotels, motels, etc.) _____

H) Number of boat slips/courts (e.g., tennis, handball, etc.), alleys: _____

I) Days/Hours of Operation: _____

XVI. PROPOSALS NOT MENTIONED ABOVE (Please be specific):

_____

_____

_____

_____

_____

XVII. APPLICANT CERTIFICATION

I, DEVANAND JAIKARRAN, certify that the this application has addressed the objectives outlined in the Zoning Ordinance with consideration given to the public health, safety and welfare; the comfort and convenience of the public in general or the residents or users of the proposed development and of the immediate neighborhood.

The applicant certifies that all information contained herein is accurate and complete as of the date of this application.

Signature of Applicant

9-24-2025
Date

Revised January 2025: Previous Editions Obsolete

GENERAL NOTES

Contractor shall visit the site and verify all existing conditions and dimensions before construction is to begin. Do not scale drawings, use written dimensions.
Contractor shall provide all labor, materials, and equipment required to complete all work, as shown on drawings necessary for a complete job. All material and workmanship shall be of good quality.
Contractor shall obtain all necessary permits, licenses, and inspections necessary to complete the work. Contractor shall obtain Certificate of Occupancy.

GENERAL CODE INFORMATION

APPLICABLE CODES:
CITY OF POUGHKEEPSIE CODE
UNIFORM BUILDING AND FIRE CODE
2020 NEW YORK STATE BUILDING AND FIRE CODE
2020 INTERNATIONAL BUILDING CODE
2020 INTERNATIONAL MECHANICAL
2020 INTERNATIONAL FIRE CODE
2020 NATIONAL ELECTRICAL CODE
2020 NEW YORK STATE FUEL AND GAS CODE
NFPA 33
OSHA 126
2020 UNIFORM ENERGY CONSERVATION CONSTRUCTION CODE
2020 ENERGY CONSERVATION CONSTRUCTION CODE OF NYS

Engineer/Designer have not been retained by owner to provide periodic job inspections and adminstration. It is the owner's and contractor's responsibility to ensure that the work is properly done.

Contractor shall notify the Engineer/Designer before demolition if any discrepancies exist which could alter the work.

Materials shall be installed according to the manufacturer's specifications. All work shall comply with applicable sections of the state and local codes and the generally accepted standards as listed in the state building code. New stucco finish and brick work shall match existing.

Foundation Excavate all earth, boulders, loose and soft rock to the lines and depth indicated on the drawings. All footings to bear on solid, undisturbed earth. Excavate for all utilities as required.
Foundation wall shall be damproof with 2 coats of asphalt waterproofing over 1/2" cement parge (block wall) or cement wash (poured wall). Provide 4" perforated pipe footing drain laid in 12" stone with layer of salt hay over. Drain to outflow above ground or drywell as per Village Code.

Footings shall bear on solid undisturbed earth. Design of footings is based on 3500 psi soil. If soil bearing conditions are questionable, contractor shall consult engineer for footing design. Sloped footings shall be 1:2 max. slope. All footings bearing from rock to soil shall be reinforced with four(4)#4 re-bars. Dowel and pin all footings bearing on rock with slope greater than 7:12. All footings shall be 3'6" minimum below finish grade.

Finish grading shall be established to provide surface drainage in all directions away from building and excavated areas.

STRUCTURAL STEEL
pipe columns shall be of standard weight pipe unless noted otherwise.
A-36 Steel Design(compact sections ex. wide flange beams):
Bending Fb= 24,000 psi
Shear Ev= 14,500 psi
Mod. Of Elasticity E= 29,000, 000 psi

All steel plates shall conform to ASTM specifications A-36 for structural steel. All bolt holes to be property drilled. Torched holes are not acceptable. See details.
The design, installation, workmanship, tecnique and inpection for welding and boilting shall be in accordance with AISC Load and Resistance Factor Design Specification for Structural Steel Buildings.

CONCRETE & MASONRY
CONCRETE shall be 1:2:3 mix with just enough water to make it workable. All concrete work shall conform to ACI 318 design and specifications as required by code. Concrete shall be a minimum of 3500 psi in strength. All Reinforcing bars for concrete work shall conform to A.S.T.M. A615 Grade 60.

CONCRETE FLOORS shall have a smooth, dense steel trowel finish, suitable to receive composition flooring. Provide 6-mil polyethylene vapor barrier under all concrete slabs.
Garage slab shall be reinforced with 6x6 10/10 welded wire mesh. Concrete shall be 4000 psi in strength. Pitch garage floor for drainage.

POURED CONCRETE FOUNDATIONS Shall comply with the latest edition of American Concrete Institute Specification and shall be plumb, straight, level, and true. Forms to be properly constructed to hold concrete. Provide two (2) #5 re- bars located at top and bottom of wall.

MASONRY: Concrete block shall be load bearing, laid level, plumb, and straight. Provide galvanized ties at 16" o.c horizontal and vertical. All to be well tooled.

LUMBER All framing lumber to be stress graded Douglas Fir No.2 or better (865 psi).

FRAMING Framing shall be erected plumb, level and true, securely nailed. Joist, studs, and rafters shall be doubled over all openings. All flush headers shall be connected with galvanized metal joist hangers. All flush beam connections shall have heavy duty joist hangers. Double frame under all partitions parallel to framing. Sizes of joist and sheathing are shown on the plans. Provide solid blocking under all posts. Sill plates shall all be pressure treated with metal shield and sill sealer.

GLULAM BEAM: Shall be No. 1 Douglas Fir (minimum Fb-2200psi)

LAMINATED VENEER BEAM: Shall be GP-Lam by Georgia Pacific or equal minimum fb. 2850 install as per manufacture's specifications.

WINDOWS Shall be "ANDERSEN" Perma-shield TEMPERED or equal . Size and type shown on plans.

ALL FASTENERS USED WITH PRESSURE TREATED WOOD SHALL BE ACQ COMPATIBLE.
ELECTRIC WORK SHALL BE DONE A LICENSED ELECTRICIAN.

DEMOLITION NOTES:

CONTRACTOR AND HIS SUB CONTRACTORS SHALL REMOVE AND OR PERFORM ALL DEMOLITION WORK IN A PROFESSIONAL MANNER IN ACCORDANCE WITH REGULATIONS OF THE BUILDING CONSTRUCTION CODE OF NEW YORK STATE, N.F.P.A. DEMOLITION OPERATIONS CODE, "GOOD GENERAL PRACTICES" MANUAL.
ALL DEMOLITION WORK SHALL BE DONE IN CONFORMANCE WITH CITY OF POUGHKEEPSIE REGULATIONS.
CONTRACTOR SHALL OBTAIN ALL PERMITS, AND UTILITY CUT-OFF. BEFORE TO BEGIN ANY WORK.
CONTRACTOR SHALL BE RESPOSIBLE FOR REMOVAL AND DISPOSAL OF ALL LEAD PAINT, ASBESTOS AND ANY OTHER MATERIAL IN A SAFE, LAWFUL WORKMAN MANNER. ALL REMOVAL WORK SHALL CONFORM TO LOCAL, STATE AND FEDERAL LAWS.
NO FIRE SHALL BE ALLOWED ON SITE.

Dig Safely. New York
Dig Safely and Dig Safely. New York are used under license from Dig Safe System, Inc.
Know what's below.
Call 811 before you dig.

2020 UNIFORM BUILDING CODE

INSSULATION AND FENESTRATION REQUIREMENTS BY COMPONENT

DESIGN DATA ZONE 5

VALUES REQUIRED BY CODE									
FENESTRATION U-Factor	SKYLIGHT U-Factor	SHGC	CEILING R-VALUE	WOOD WALL R-VALUE	MASS WALL R-VALUE	FLOOR R-VALUE	BASMT. WALL R-VALUE	SLAB R-VALUE DEPTH	CRAWL SPACE WALL R-VALUE
0.30	0.55	NR	49	20 OR 13+5	13/17	30	15/19	10/2'	15/19
VALUES PROVIDED									
	NA	NR	NA	21	21	NA	NA	NA	NA

A. R-VALUES ARE MINIMUMS. U-FACTORS AND SHGC ARE MAXIMUMS. WHERE INSULATION IS I NSTALLED IN A CAVITY THAT IS LESS THAN THE LABEL OR DESIGN THICKNESS OF THE INSULATION, THE INSTALLED R-VALUE OF THE INSULATION SHALL NOT BE LESS THAN THE R-VALUE SPECIFIED IN THE TABLE.

B. THE FENESTRATION U-FACTOR COLUMN EXCLUDES SKYLIGHTS THE SHGC COLUMN APPLIES TO

A. R-VALUES ARE MINIMUMS. U-FACTORS AND SHGC ARE MAXIMUMS. WHERE INSULATION IS I NSTALLED IN A CAVITY THAT IS LESS THAN THE LABEL OR DESIGN THICKNESS OF THE INSULATION, THE INSTALLED R-VALUE OF THE INSULATION SHALL NOT BE LESS THAN THE R-VALUE SPECIFIED IN THE TABLE.

B. THE FENESTRATION U-FACTOR COLUMN EXCLUDES SKYLIGHTS THE SHGC COLUMN APPLIES TO ALL GLAZED FENESTRATION.

C. "10/13" MEANS R-10 CONTINUOUS INSULATION ON THE INTERIOR OR EXTERIOR OF THE HOME OR R-13 CAVITY INSULATION ON THE INTERIOR OF THE BASEMENT WALL. "15/19" MEANS R-15 ON THE INTERIOR OR EXTERIOR OF THE HOME OR R-19 CAVITY INSULATION AT THE INTERIOR OF THE BASEMENT WALL. ALTERNATIVELY, COMPLIANCE WITH "15/19" SHALL BE R-13 CAVITY INSULATION OF THE INTERIOR OF THE BASEMENT WALL PLUS R-5 CONTINUOUS INSULATION ON THE INTERIOR OR EXTERIOR OF THE HOME.

D. R-5 INSULATION SHALL BE PROVIDED UNDER THE FULL SLAB AREA OF A HEATED SLAB IN ADDITION TO THE REQUIRED SLAB EDGE INSULATION R-VALUE FOR SLABS. AS INDICATED IN THE TABLE. THE SLAB EDGE INSULATION FOR HEATED SLABS SHALL NOT BE REQUIRED TO EXTEND BELOW THE SLAB.

E ALTERNATIVELY, INSULATION SUFFICIENT TO FILL THE FRAMING CAVITY AND PROVIDING NOT LESS THAN AN R-VALUE OF R-19.

F THE FIRST VALUE IS CAVITY INSULATION. THE SECOND VALUE IS CONTINUOUS INSULATION. THEREFORE, AS AN EXAMPLE, "13+5" MEANS R-13 CAVITY INSULATION PLUS R-5 CONTINUOUS INSULATION.

G MASS WALLS SHALL BE IN ACCORDANCE WITH SECTION R402.2.5. THE SECOND R-VALUE APPLIES WHERE MORE THAN HALF OF THE INSULATION IS ON THE INTERIOR OF THE MASS WALL

NOTE:

INSTALL EXPANDING FOAM SEALANT AT ALL GAPS OF RIGID INSULATION.
CONTINUOUS BEAD OF SEALANT AT CEILINGS AND FLOOR GAPS.

CLIMATIC AND GEOGRAPHIC DESIGN CRITERIA ZONE 5

GROUND SNOW LOAD	WIND SPEED	SEISMIC DESIGN CATEGORY	SUBJECT TO DAMAGE FROM				WINTER DESIGN TEMP.	ICE SHIELD UNDERLAYMENT REQUIRED	FLOOD HAZARDS ZONE
			WEATHERING	FROST LINE DEPTH	TERMITE	DECAY			
40	90-110 MPH	B	SEVERE	48"	MODERATE TO HEAVY	SLIGHT TO MODERATE	72	YES	FIRM

NOTE:

THESE DRAWINGS ARE BASED ON FIELD MEASUREMENTS, DRAWINGS BY OTHERS AND ON INFORMATION PROVIDED BY OWNER. THEY ARE SUBJECT TO MINOR VARIATIONS. ENGINEER/ARCHITECT SHALL NOT BE HELD RESPONSIBLE FOR UNFORSEEN CONDITIONS.
CONTRACTOR SHALL VERIFY ALL EXISTING CONDITIONS AND DIMENSIONS IN FIELD PRIOR TO CONSTRUCTION AND OR FABRICATION.

LEGEND

- EXISTING WALL TO REMAIN
- EXISTING WALL TO BE REMOVED
- NEW CONSTRUCTION
- SD SMOKE DETECTOR
- EMERGENCY EXIT
- FIRE EXINGUISHER

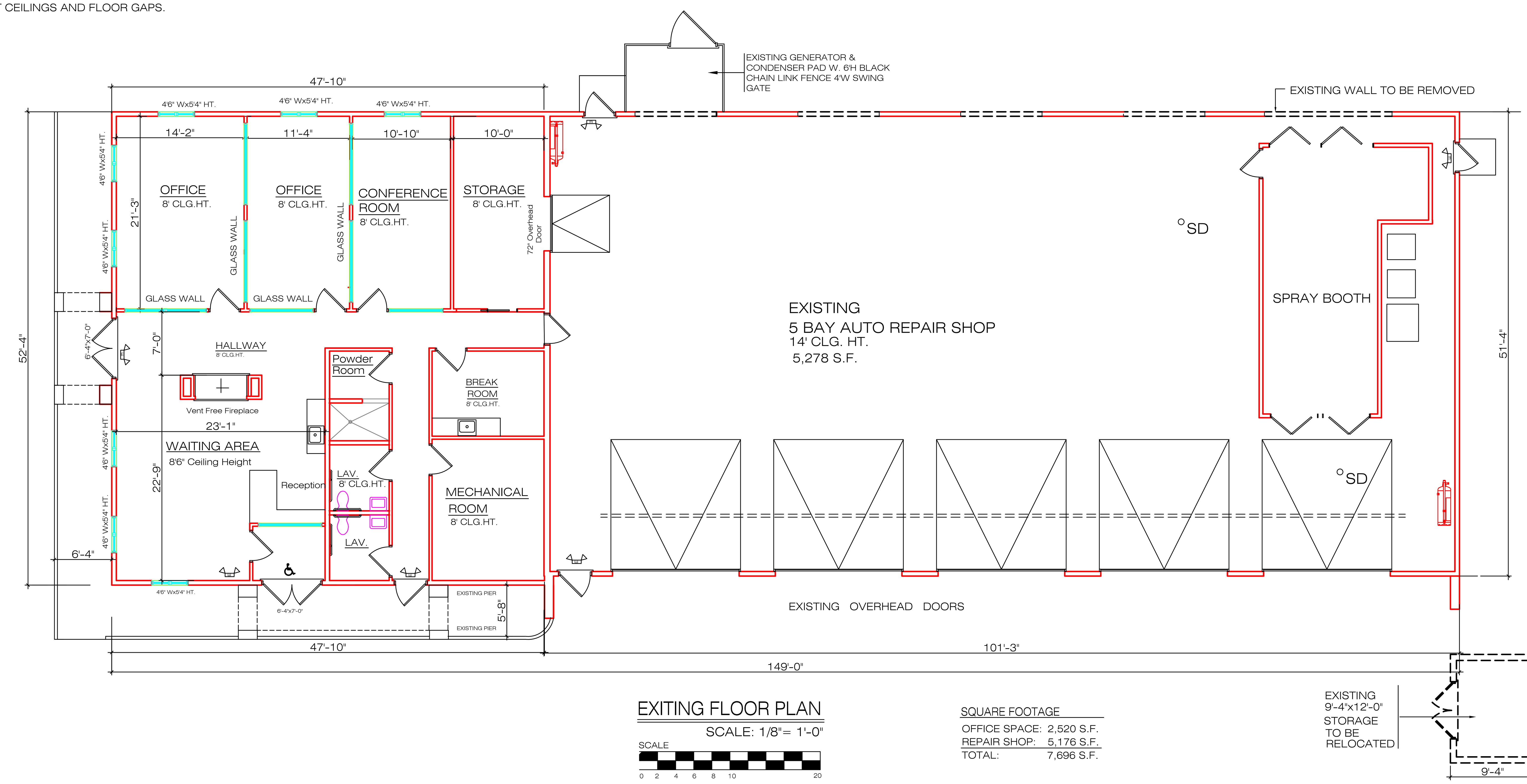

EXITING FLOOR PLAN

SCALE: 1/8"= 1'-0"

SCALE 0 2 4 6 8 10 20

SQUARE FOOTAGE

OFFICE SPACE:	2,520 S.F.
REPAIR SHOP:	5,176 S.F.
TOTAL:	7,696 S.F.

PROGRESS PRINT
NOT FOR CONSTRUCTION

NOTE:
ANY UNAUTHORIZED ALTERATION OR ADDITION TO THESE PLANS IS A VIOLATION OF THE SECTION 7209 OF THE NEW YORK STATE EDUCATION LAW EXCEPT AS PER SECTION 7209, SUBDIVISION 2.

REVISION	DATE:
NO. 2	ZONING REVIEW COMMENTS 8-18-2025
NO. 1	ZONING REVIEW COMMENTS 4-9-2025

STUDIO 90 DESIGN & PLANNING
PO BOX 63, NORTH SALEM, NEW YORK 10560
TEL. 845 239 1456
Email: studio90@msn.com
KENNETH L. KAEFER, R.A.
ALFREDO DI PIETRO, DESIGNER
PETER MARCHETTI, P.E., CONSULTING ENGINEER
© ALL RIGHTS RESERVED, INCLUDING REPRODUCTION IN ANY FORM.

REGISTERED ARCHITECT KENNETH L. KAEFER STATE OF NEW YORK 12119

PROJECT:
PROPOSED PARKING GARAGE ADDITION
EXISTING CONDITIONS, DEMO PLAN
AJ AUTOBODY LLC
16 PERSHING AVENUE
POUGHKEEPSIE, N.Y. 12601

DATE: 3-19-2025
JOB NO. 25-14
SCALE: 1/8"=1'-0'
DWG. NO.: A 1

NOTE:

THESE DRAWINGS ARE BASED ON FIELD MEASUREMENTS, DRAWINGS BY OTHERS AND ON INFORMATION PROVIDED BY OWNER. THEY ARE SUBJECT TO MINOR VARIATIONS. ENGINEER/ARCHITECT SHALL NOT BE HELD RESPONSIBLE FOR UNFORSEEN CONDITIONS.

CONTRACTOR SHALL VERIFY ALL EXISTING CONDITIONS AND DIMENSIONS IN FIELD PRIOR TO CONSTRUCTION AND OR FABRICATION.

LEGEND

- EXISTING WALL TO REMAIN
- EXISTING WALL TO BE REMOVED
- NEW CONSTRUCTION
- SOLID BEARING
- SD SMOKE DETACTOR
- EMERGENCY EXIT
- FIRE EXINGUISHER

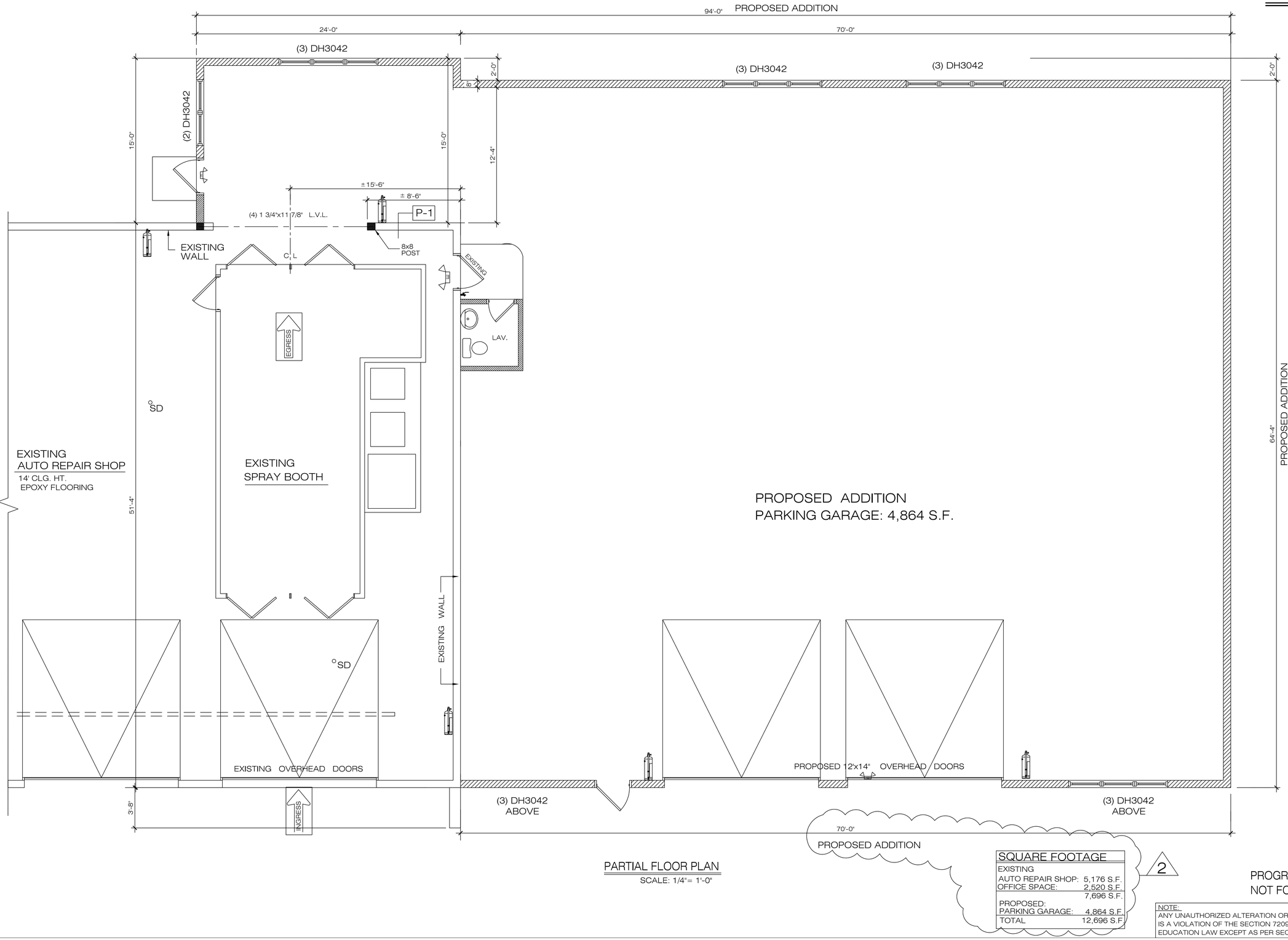

PARTIAL FLOOR PLAN

SCALE: 1/4"= 1'-0"

SQUARE FOOTAGE	
EXISTING	
AUTO REPAIR SHOP:	5,176 S.F.
OFFICE SPACE:	2,520 S.F.
	7,696 S.F.
PROPOSED:	
PARKING GARAGE:	4,864 S.F.
TOTAL	12,696 S.F.

2

PROGRESS PRINT
NOT FOR CONSTRUCTION

NOTE:
ANY UNAUTHORIZED ALTERATION OR ADDITION TO THESE PLANS IS A VIOLATION OF THE SECTION 7209 OF THE NEW YORK STATE EDUCATION LAW EXCEPT AS PER SECTION 7209, SUBDIVISION 2.

REVISION	DATE:
NO. 2	ZONING REVIEW COMMENTS 8-18-2025
NO. 1	ZONING REVIEW COMMENTS 4-9-2025

STUDIO 90 DESIGN & PLANNING
PO BOX 63, NORTH SALEM, NEW YORK 10560
TEL. 845 239 1456
Email: studio90@msn.com
KENNETH L. KAEFER, R.A.
ALFREDO DI PIETRO, DESIGNER
PETER MARCHETTI, P.E., CONSULTING ENGINEER

© ALL RIGHTS RESERVED, INCLUDING REPRODUCTION IN ANY FORM.

REGISTERED ARCHITECT KENNETH L. KAEFER 12116 STATE OF NEW YORK

PROJECT:
PROPOSED PARKING GARAGE ADDITION
PROPOSED PLAN
AJ AUTOBODY LLC
16 PERSHING AVENUE
POUGHKEEPSIE, N.Y. 12601

DATE:3-19-2025
JOB NO. 25-14
SCALE: 1/4"=1'-0"
DWG. NO.: A-3

CITY PLANNING BOARD
CITY OF POUGHKEEPSIE, NEW YORK
SITE PLAN APPROVAL

FILE NO.:

PROJECT NAME:

PROJECT LOCATION:

APPLICANT:

OFFICIALLY APPROVED at the Planning Board
Meeting held the____day of_____2025

PLANNING CHAIR:

DESIGNEE:

DATE SIGNED:

CONDITIONS:

CITY APPROVALS
CITY OF POUGHKEEPSIE, NEW YORK

	Date:
Zoning Board Of Appeal:	Date:
Fire Chief:	Date:
Police Chief:	Date:
Building Inspector:	Date:
City Engineer	Date:
Commissioner of Public Works	

OWNER/APPLICANT CERTIFICATION.
THE UNDERSIGNED OWNER OF THE PROPERTY AND APPLICANT STATE THAT THEY ARE FAMILIAR WITH THIS MAP AND ITS CONTENTS HEREBY CONSENT TO ALL TERMS CONDITIONS AS STATED HEREON.. HE/SHE IS FINANCIALLY CAPABLE OF COMPLETING THIS PROJECT.

Date:

OWNER

Date:

APPLICANT

PROPERTY NOTES

1.THERE ARE NO WAIVERS REQUESTED.

2.THERE ARE NO EXISTING EASEMENTS, RIGHTS OF WAY, SETBACKS, RESERVATIONS AND REARS DEDICATED TO PUBLIC USE, OUTLINE OF EXISTING COVENANTS AND DEED RESTRICTIONS WITHIN, ADJACENT OR OTHERWISE PERTAINING TO THE PROPERTY.

3. APPLICANT IS FINANCIALLY CAPABLE TO COMPLETE THE PROPOSED PROJECT.

4. THERE ARE NO PROPOSED FIRE ALARM BOXES AND OR CONNECTIONS TO CITY FIRE ALARM SYSTEM.

5. NO DAMAGE TO PERSHING AVENUE ENTRANCE AND SIDEWALK.

6.THERE ARE NO NEW PROPOSED GRADE CHANGES, EXISTING GRADE IS TO REMAIN.

7.THERE ARE NO WATER COURSES, MARSHES, WOODED AREAS, ROCK CROPS WITHIN THE SITE. THE SITE IS NOT WITHIN OR ADJACENT TO A FLOOD PLAN.

8. STORMWATER MEASURES WILL BE ADDRESSED ON SITE WITH "CULTEC" STORMWATER MANAGEMENT SYSTEM.

DRAWINGS NOTE:

THESE DRAWINGS ARE BASED ON FIELD MEASUREMENTS, OBSERVATION, AND INFORMATION PROVIDED BY OWNER. THEY ARE SUBJECT TO MINOR VARIATIONS.
ARCHITECT/ENGINEER SHALL NOT BE HELD RESPONSIBLE FOR UNFORSEEN CONDITIONS.
CONTRACTOR SHALL VERIFY ALL EXISTING CONDITIONS AND DIMENSIONS IN FIELD PRIOR TO CONSTRUCTION AND OR FABRICATION.

GENERAL CODE INFORMATION

APPLICABLE CODES:
CITY OF POUGHKEEPSIE CODE
UNIFORM BUILDING AND FIRE CODE
2020 NEW YORK STATE BUILDING AND FIRE CODE
2020 INTERNATIONAL BUILDING CODE
2020 INTERNATIONAL MECHANICAL
2020 INTERNATIONAL FIRE CODE
2020 NATIONAL ELECTRICAL CODE
2020 NEW YORK STATE FUEL AND GAS CODE
NFPA 33
OSHA 126
2020 UNIFORM ENERGY CONSERVATION CONSTRUCTION CODE
2020 ENERGY CONSERVATION CONSTRUCTION CODE OF NYS
OCCUPANCY H
CONSTRUCTION TYPE V

ZONING DATA

CITY OF POUGHKEEPSIE N,Y, OCTOBER 2024 ZONING AND USE REGULATIONS

PARCEL NUMBER: 131300-6161-24-427963 | YEAR BUILT: 2017

ZONING DISTRICT: MIXED USE5-(MU5) DISTRICT | FORMER C-2, C-3

USE: AUTO REPAIR SHOP

LOT AREA AND COVERAGE	REQUIRED	EXISTING	PROPOSED
LOT AREA (Min.)	N/A	± 1.30 Acres	± 1.30 Acres
LOT WIDTH	N/A	206.76'	206.76'
LOT COVERAGE	80%	± 49.8%	± 57%
BUILDING PLACEMENT			
PRIMARY BUILDING PLACEMENT			
PRIMARY STREET SETBACK	0/15'	± 105.47'	± 105.47'
SECONDARY STREET SETBACK	0/15	± 123'	± 123'
SIDE SETBACK (Min.)	0'	52.84'	11'
REAR SETBACK (Min.)	15'	23.62'	16.42'
HEIGHT (Max.)	5 STORIES/68'	ONE STORY/24'	ONE STORY/24'
PARKING SPACES EMPLOYEE (8)	1/300 S.F.=26 Employee =4	25 0	TOTAL 35
BICYCLE PARKING	10% OF 34=3.4	0	4
LANDSCAPE BUFFER	10'	23.62'	16.42'
ADA PARKING	2	1	2


N WHITE ST
S WHITE ST
S CLINTON
S CLINTON
AV MAIN
PERSHING AV
PERSHING AV
S HAMILTON
S HAMILTON
S ADELAIDE
S ADELAIDE
S ADELAIDE

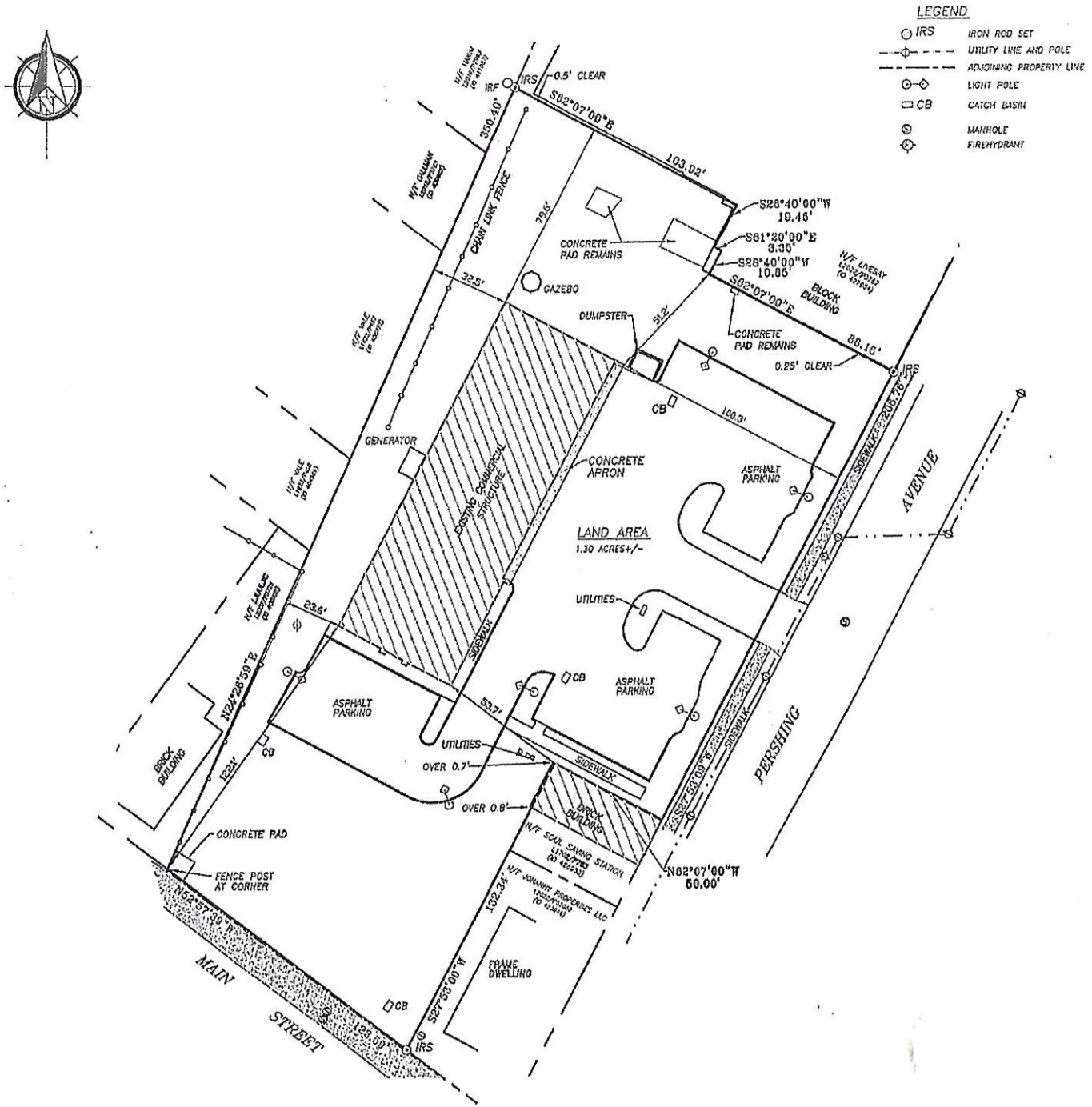

NOTES:

PROPERTY LINE AS SHOWN ARE BASED ON DEEDS OF RECORD AND FILED MAPS.

THIS IS AN ACCURATE SURVEY COMPLETED IN THE FIELD SEPTEMBER 2023

SUBJECT TO ALL EASEMENTS AND/OR AGREEMENTS THAT THE PUBLIC UTILITY COMPANIES MAY HAVE.

ONLY COPIES FROM THE ORIGINAL OF THIS SURVEY MARKED WITH AN ORIGINAL OF THE LAND SURVEYORS SEAL OR HIS/HER EMBOSSED SEAL SHALL BE CONSIDERED TO BE VALID TRUE COPIES

GUARANTEES OR CERTIFICATIONS INDICATED HEREON SIGNIFY THAT THIS SURVEY WAS PREPARED IN ACCORDANCE WITH THE EXISTING CODE OF PRACTICE FOR LAND SURVEYS ADOPTED BY THE NEW YORK STATE ASSOCIATION OF PROFESSIONAL LAND SURVEYORS. SAID GUARANTEES OR CERTIFICATIONS SHALL RUN ONLY TO THE PERSON FOR WHOM THE SURVEY IS PREPARED, AND ON HIS BEHALF TO THE TITLE COMPANY, GOVERNMENTAL AGENCY AND LENDING INSTITUTION LISTED HEREON, AND TO THE ASSIGNEES OF THE LENDING INSTITUTION. GUARANTEES OR CERTIFICATIONS ARE NOT TRANSFERABLE TO ADDITIONAL INSTITUTIONS OR SUBSEQUENT OWNERS.

SUBJECT TO ALL RIGHT OF WAY TAKINGS NOT SHOWN OR FOUND IN COUNTY OR TOWN RECORDS

REFERENCES:
-L2011/P3475

CERTIFY TO:
-AJ AUTOBODY LLC
-FIRST AMERICAN TITLE INSURANCE COMPANY
-PRO-10931

GRAPHIC SCALE
SCALE 1" = 30'
0 15 30 45 60

SURVEY FOR
AJ AUTOBODY LLC

CITY OF POUGHKEEPSIE
DUTCHESS COUNTY, NEW YORK

PROJECT TITLE

STEVEN J. GREEN PLS
LICENSE NO. 050505
P.O. BOX 634, GOSHEN, NY 10924
(845) 978-1672

STEVEN J GREEN PLS LICENSE 050505 DATE

UNAUTHORIZED ALTERATION OR ADDITION TO A PLAN BEARING A LICENSED LAND SURVEYOR'S OR PROFESSIONAL ENGINEER'S SEAL IS A VIOLATION OF SECTION 7209, SUB-DIVISION 2 OF THE N.Y. STATE EDUCATION LAW.

SCALE	PROJECT	CAD REFERENCE
1" = 30'	10 PERSHING AVE	123-009
PARCEL ID	DATE:	DWG NO
427993	9/6/2023	1 of 1

NOTES:

1. ALL CONNECTIONS, SEWER, GAS, WATER, ETC. SHALL BE PROPERLY SECURED AND PROECTED DURING EXCAVATION AND CONSTRUCTION.

2. PRIOR TO START OF EXCAVATION AND CONSTRUCTION, TREES TO BE RETAINED SHALL BE PROTECTED BY SILT FENCE, SNOW FENCE CONSTRUCTION FENCE OR EQUAL, WHICH WILL BE PLACED AT DRIP LINE OR SEVERAL FEET BEYOND. HOWEVER, THE FENCING SHALL NOT CROSS PUBLIC SIDEWALKS. NO STORAGE OR STOCKPILING OF CONSTRUCTION MATERIALS, DEBRIS OR EQUIPMENT SHALL OCCUR WITHIN THE FENCED AREAS.

NOTE:

EVERGREENS TO BE
3' HIGH MINMUM.
3' WIDE MINMUM.
3' MINMUM FROM PROPERTY LINE



Pink Magnolia, Lily Tree
Magnolia Soulangeana



BLOOMERANG LILAC
Syringa Vulgaris Lilac Tree



Amelanchier Canadensis
Eastern Serviceberry

WINTERGREEN BOXWOOD SHRUB



BABY GEM BOXWOOD
Buxus Microphylla Japonica Gregem
TO BE PLANTED AT PROPERTY LINE





Panicle Hydrangeas
Hydrangea Paniculata
TO BE PLANTED IN PLANTERS

TREE LEGEND

PROPOSED TREES

NAME	SIZE	QUANTITY
Eastern Service Berry	4" Dia.	4
Blumerang Lilac	4" Dia	4
Pink Magnolia	6" Dia	5

GENERAL LANDSCAPING

1. ALL CONSTRUCTION MATERIALS TO BE STORED AT REAR AREA DURING CONSTRUCTION.
2. AUTOMATIC DRIP SYSTEM TO BE INSTALLED IN ALL PLANTING AREAS.
3. OVER-DIG ALL TREE AND SHRUB HOLES TWO TIMES BALL SIZE AND REPLACE WITH MIX OF TOPSOIL AND ORGANIC MATERIAL.
4. MULCH ALL PERENNIAL BEDS WITH AT LEAST THREE INCHES OF ORGANIC MULCH.
5. RE-VEGETATE ALL AREAS TO REMAIN NATIVE WITH NATIVE GRASSES.
6. THERE IS TO BE NO SOD.
7. TRASH TO BE ENCLOSED AT REAR
8. APPLY ROCK OVER 6 MIL PLOY WHERE WATER IS CHANNELED AROUND HOUSE. DESIGN FOR SHEET DRAINAGE WHERE WATER IS NOT CHANNELED.

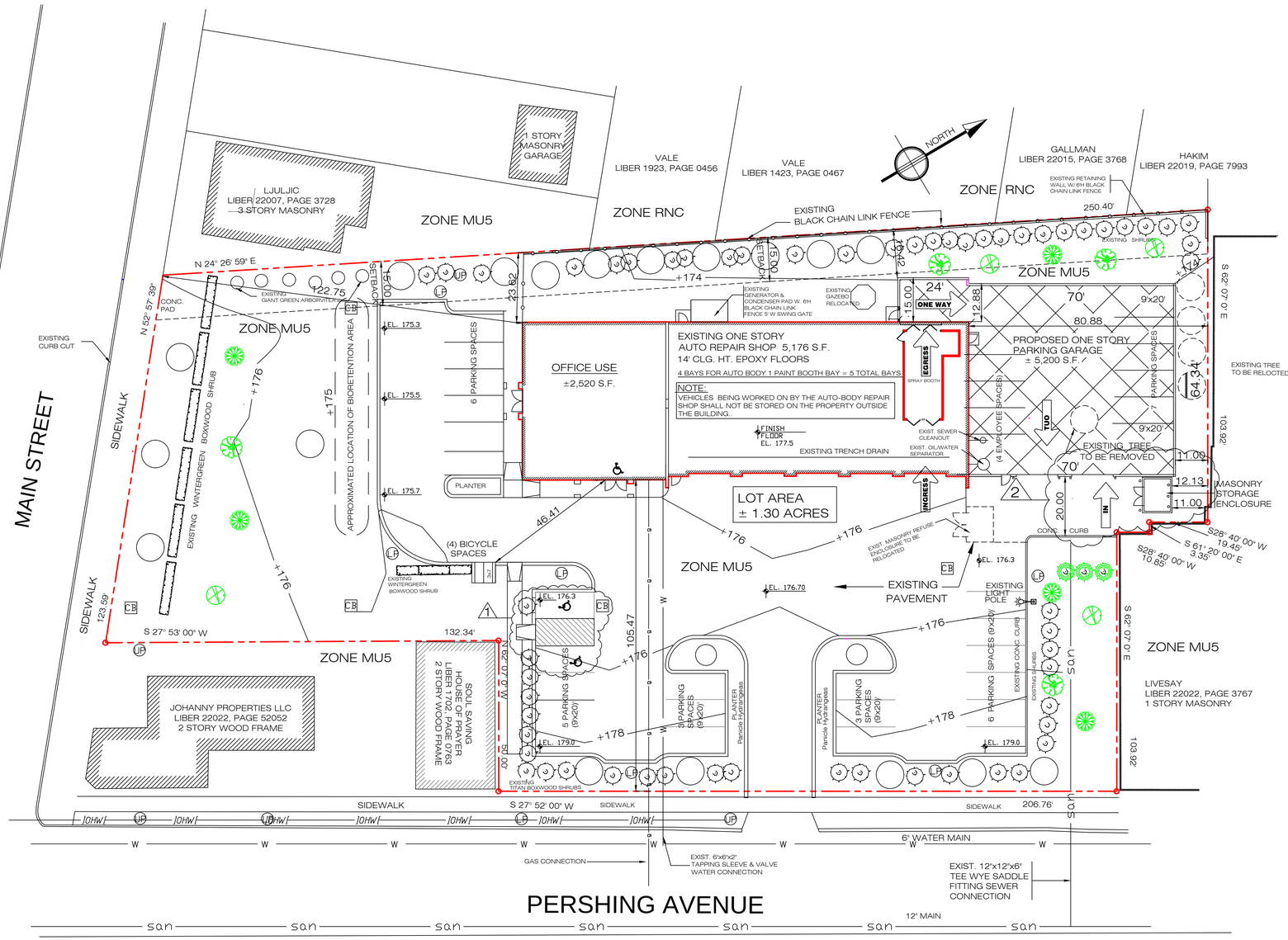

LEGEND

- PROPERTY LINE
- EXISTING BUILDING
- SETBACK LINE
- AREA OF PROPOSED WORK
- UP — UTILITY POLE
- CB — CATCH BASIN
- RL — ROOF LEADER
- LP — LIGHT POLE
- HD — HYDRANT
- 9 — GAS
- w — WATER
- S — SEWER
- POROUS PAVEMENT
- ASPHALT PAVEMENT
- PROPOSED LIGHT POLE
- PROPOSED GARAGE ADDITION
- EXISTING TREES TO REMAIN
- EXISTING TREES TO BE REMOVED
- EXISTING SHRUBS

PROPOSED TREE
- Eastern Service Berry
- Blumerang Lilac
- Pink Magnolia

DRAWINGS NOTE:

THESE DRAWINGS ARE BASED ON FIELD MEASUREMENTS, OBSERVATION, AND INFORMATION PROVIDED BY OWNER. THEY ARE SUBJECT TO MINOR VARIATIONS. ARCHITECT/ENGINEER SHALL NOT BE HELD RESPONSIBLE FOR UNFORSEEN CONDITIONS.
CONTRACTOR SHALL VERIFY ALL EXISTING CONDITIONS AND DIMENSIONS IN FIELD PRIOR TO CONSTRUCTION AND OR FABRICATION.

Dig Safely. New York
Know what's below. Call 811 before you dig.

LANDSCAPING PLAN

SCALE: 1"=20'

PROGRESS PRINT

NOTE:
ANY UNAUTHORIZED ALTERATION OR ADDITION TO THESE PLANS IS A VIOLATION OF THE SECTION 7209 OF THE NEW YORK STATE EDUCATION LAW EXCEPT AS PER SECTION 7209, SUBDIVISION 2.

NO. 2	ZONING REVIEW COMMENTS 8-18-2025
NO. 1	ZONING REVIEW COMMENTS 4-9-2025
REVISION	DATE:

STUDIO 90 DESIGN & PLANNING
4 FAIRWAY DRIVE, PAWLING, N. Y. 12564
TEL. 845 239 1456
Email: studio90@msn.com
KENNETH L. KAEFER, R.A.
ALFREDO DI PIETRO, DESIGNER
PETER MARCHETTI, P.E., CONSULTING ENGINEER
© ALL RIGHTS RESERVED. INCLUDING REPRODUCTION IN ANY FORM.

STATE OF NEW YORK · PETER G. MARCHETTI JR. · 061529 · LICENSED PROFESSIONAL ENGINEER

PROJECT: PROPOSED
PROPOSED PARKING GARAGE ADDITION
LANDSCAPING PLAN
AJ AUTOBODY LLC
16 PERSHING AVENUE
POUGHKEEPSIE, N.Y. 12601

DATE: 3-19-2025
JOB NO. 25-14
SCALE: 1"=20'
DWG. NO.: SP-1

NOTE:

THESE DRAWINGS ARE BASED ON FIELD MEASUREMENTS, DRAWINGS BY OTHERS AND ON INFORMATION PROVIDED BY OWNER. THEY ARE SUBJECT TO MINOR VARIATIONS. ENGINEER/ARCHITECT SHALL NOT BE HELD RESPONSIBLE FOR UNFORSEEN CONDITIONS.
CONTRACTOR SHALL VERIFY ALL EXISTING CONDITIONS AND DIMENSIONS IN FIELD PRIOR TO CONSTRUCTION AND OR FABRICATION.

LEGEND

- EXISTING WALL TO REMAIN
- EXISTING WALL TO BE REMOVED
- NEW CONSTRUCTION

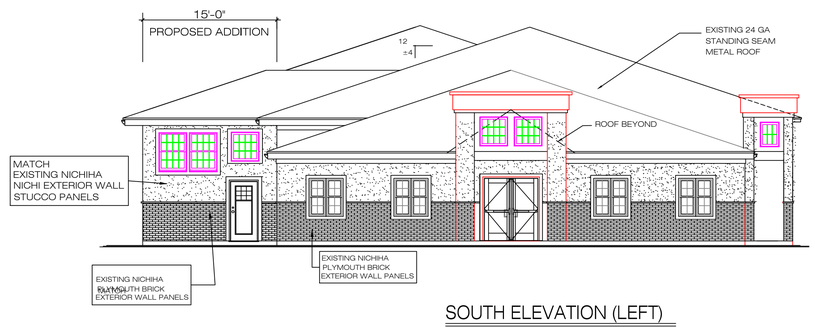

SOUTH ELEVATION (LEFT)

SCALE: 1/8"= 1'-0"

SCALE 0 2 4 6 8 10 20

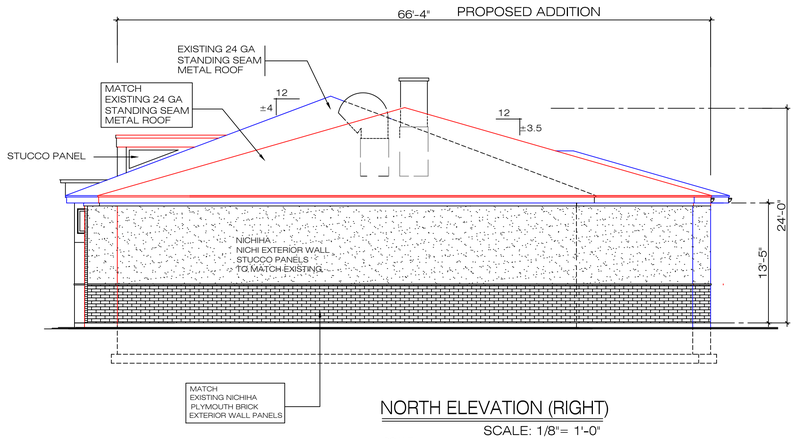

NORTH ELEVATION (RIGHT)

SCALE: 1/8"= 1'-0"

SCALE 0 2 4 6 8 10 20

TRANSPARENCY

EXISTING:	± 8.0%
PROPOSED:	13.3%
TOTAL:	21.3%

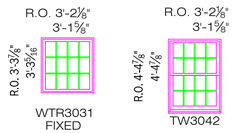

PROPOSED WINDOWS

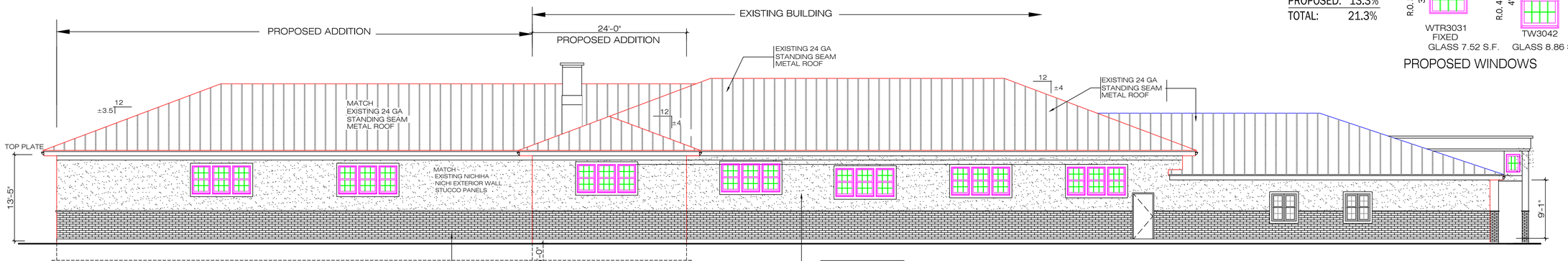

WEST ELEVATION (REAR)

SCALE: 1/8"= 1'-0"

SCALE 0 2 4 6 8 10 20

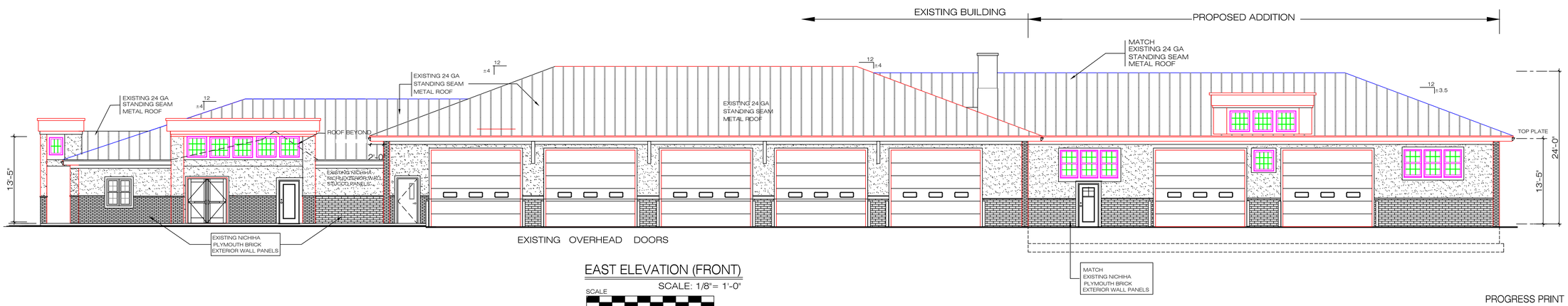

EAST ELEVATION (FRONT)

SCALE: 1/8"= 1'-0"

SCALE 0 2 4 6 8 10 20

PROGRESS PRINT
NOT FOR CONSTRUCTION

NOTE:
ANY UNAUTHORIZED ALTERATION OR ADDITION TO THESE PLANS IS A VIOLATION OF THE SECTION 7209 OF THE NEW YORK STATE EDUCATION LAW EXCEPT AS PER SECTION 7209, SUBDIVISION 2.

NO. 2	ZONING REVIEW COMMENTS 8-18-2025
NO. 1	ZONING REVIEW COMMENTS 4-9-2025
REVISION	DATE:

STUDIO 90 DESIGN & PLANNING
PO BOX 63, NORTH SALEM, NEW YORK 10560
TEL 845 270 9451
Email: studio90@msn.com
KENNETH L. KAEFER, R.A.
ALFREDO DI PIETRO, DESIGNER
PETER MARCHETTI, P.E., CONSULTING ENGINEER

© ALL RIGHTS RESERVED, INCLUDING REPRODUCTION IN ANY FORM.

REGISTERED ARCHITECT
KENNETH L. KAEFER
STATE OF NEW YORK
22119

PROJECT: PROPOSED
PARKING GARAGE ADDITION
PROPOSED ELEVATIONS

AJ AUTOBODY LLC
16 PERSHING AVENUE
POUGHKEEPSIE, N.Y. 12601

DATE: 3-19-2025

JOB NO. 25-14

SCALE: 1/8"=1'-0'

DWG. NO.: A-2

e. Does the project site contain, or is it substantially contiguous to, a building, archaeological site, or district which is listed on the National or State Register of Historic Places, or that has been determined by the Commissioner of the NYS Office of Parks, Recreation and Historic Preservation to be eligible for listing on the State Register of Historic Places? ☐ Yes ☐ No

If Yes:

i. Nature of historic/archaeological resource: ☐ Archaeological Site ☐ Historic Building or District

ii. Name: _____

iii. Brief description of attributes on which listing is based:

_____

f. Is the project site, or any portion of it, located in or adjacent to an area designated as sensitive for archaeological sites on the NY State Historic Preservation Office (SHPO) archaeological site inventory? ☐ Yes ☐ No

g. Have additional archaeological or historic site(s) or resources been identified on the project site? ☐ Yes ☐ No

If Yes:

i. Describe possible resource(s): _____

ii. Basis for identification: _____

h. Is the project site within fives miles of any officially designated and publicly accessible federal, state, or local scenic or aesthetic resource? ☐ Yes ☐ No

If Yes:

i. Identify resource: _____

ii. Nature of, or basis for, designation (e.g., established highway overlook, state or local park, state historic trail or scenic byway, etc.): _____

iii. Distance between project and resource: _____ miles.

i. Is the project site located within a designated river corridor under the Wild, Scenic and Recreational Rivers Program 6 NYCRR 666? ☐ Yes ☐ No

If Yes:

i. Identify the name of the river and its designation: _____

ii. Is the activity consistent with development restrictions contained in 6NYCRR Part 666? ☐ Yes ☐ No

F. Additional Information

Attach any additional information which may be needed to clarify your project.

If you have identified any adverse impacts which could be associated with your proposal, please describe those impacts plus any measures which you propose to avoid or minimize them.

G. Verification

I certify that the information provided is true to the best of my knowledge.

Applicant/Sponsor Name _____ Date _____

Signature [signature] Title President

PRINT FORM

Short Environmental Assessment Form
Part 1 - Project Information

Instructions for Completing

Part 1 – Project Information. The applicant or project sponsor is responsible for the completion of Part 1. Responses become part of the application for approval or funding, are subject to public review, and may be subject to further verification. Complete Part 1 based on information currently available. If additional research or investigation would be needed to fully respond to any item, please answer as thoroughly as possible based on current information.

Complete all items in Part 1. You may also provide any additional information which you believe will be needed by or useful to the lead agency; attach additional pages as necessary to supplement any item.

Part 1 – Project and Sponsor Information

Name of Action or Project:
Dutchess Auto Collision

Project Location (describe, and attach a location map):
16 Pershing Avenue , POUGHKEEPSIE, NEW YORK 12601

Brief Description of Proposed Action:
Parking Garage Addition

Name of Applicant or Sponsor:	Telephone: 917 416 7591
DEVANAND JAIKERRAN	E-Mail: into@dutchessautocollision.com

Address:
16 Pershing Avenue

City/PO:	State:	Zip Code:
POUGHKEEPSIE	NEW YORK	12601

	NO	YES
1. Does the proposed action only involve the legislative adoption of a plan, local law, ordinance, administrative rule, or regulation? If Yes, attach a narrative description of the intent of the proposed action and the environmental resources that may be affected in the municipality and proceed to Part 2. If no, continue to question 2.	☑	☐
2. Does the proposed action require a permit, approval or funding from any other government Agency? If Yes, list agency(s) name and permit or approval: Z1.3ONING BOARD OF APPEALS, PLANNING BOARD, BUILDING PERMIT	☐	☑

3. a. Total acreage of the site of the proposed action? 1.30 acres
   b. Total acreage to be physically disturbed? 0.22 acres
   c. Total acreage (project site and any contiguous properties) owned or controlled by the applicant or project sponsor? 1.30 acres

4. Check all land uses that occur on, are adjoining or near the proposed action:

5. ☑ Urban ☐ Rural (non-agriculture) ☑ Industrial ☑ Commercial ☑ Residential (suburban)
   ☐ Forest ☐ Agriculture ☐ Aquatic ☐ Other(Specify):
   ☐ Parkland

	NO	YES	N/A
5. Is the proposed action,			
a. A permitted use under the zoning regulations?	☑	☐	☐
b. Consistent with the adopted comprehensive plan?	☐	☑	☐

	NO	YES
6. Is the proposed action consistent with the predominant character of the existing built or natural landscape?	☐	☑

	NO	YES
7. Is the site of the proposed action located in, or does it adjoin, a state listed Critical Environmental Area?		
If Yes, identify: _____	☑	☐

	NO	YES
8. a. Will the proposed action result in a substantial increase in traffic above present levels?	☑	☐
b. Are public transportation services available at or near the site of the proposed action?	☐	☑
c. Are any pedestrian accommodations or bicycle routes available on or near the site of the proposed action?	☑	☐

	NO	YES
9. Does the proposed action meet or exceed the state energy code requirements?		
If the proposed action will exceed requirements, describe design features and technologies:		
THE R- RATIONG WILL BE ABOVE THE NEW YORK STATE ENERGY CONSTRUCTION CODE REQUIREMENTS.	☐	☑
_____		

	NO	YES
10. Will the proposed action connect to an existing public/private water supply?		
If No, describe method for providing potable water: _____	☐	☑
_____		

	NO	YES
11. Will the proposed action connect to existing wastewater utilities?		
If No, describe method for providing wastewater treatment: _____		
THE PROPOSED ADDITION STORMWATER MANAGEMENT WILL TREATED WITH CULTEC SYSTEM	☐	☑
_____		

	NO	YES
12. a. Does the project site contain, or is it substantially contiguous to, a building, archaeological site, or district which is listed on the National or State Register of Historic Places, or that has been determined by the Commissioner of the NYS Office of Parks, Recreation and Historic Preservation to be eligible for listing on the State Register of Historic Places?	☑	☐
b. Is the project site, or any portion of it, located in or adjacent to an area designated as sensitive for archaeological sites on the NY State Historic Preservation Office (SHPO) archaeological site inventory?	☑	☐

	NO	YES
13. a. Does any portion of the site of the proposed action, or lands adjoining the proposed action, contain wetlands or other waterbodies regulated by a federal, state or local agency?	☑	☐
b. Would the proposed action physically alter, or encroach into, any existing wetland or waterbody?	☑	☐
If Yes, identify the wetland or waterbody and extent of alterations in square feet or acres: _____		
_____		
_____		

14. Identify the typical habitat types that occur on, or are likely to be found on the project site. Check all that apply:

☐ Shoreline ☐ Forest ☐ Agricultural/grasslands ☐ Early mid-successional

☐ Wetland ☑ Urban ☑ Suburban

	NO	YES
15. Does the site of the proposed action contain any species of animal, or associated habitats, listed by the State or Federal government as threatened or endangered?	☑	☐
16. Is the project site located in the 100-year flood plan?	☑	☐
17. Will the proposed action create storm water discharge, either from point or non-point sources?	☑	☐
If Yes,		
a. Will storm water discharges flow to adjacent properties?	☑	☐
b. Will storm water discharges be directed to established conveyance systems (runoff and storm drains)?	☑	☐
If Yes, briefly describe: _____ _____		
18. Does the proposed action include construction or other activities that would result in the impoundment of water or other liquids (e.g., retention pond, waste lagoon, dam)?	☑	☐
If Yes, explain the purpose and size of the impoundment: _____ _____		
~~1~~9. Has the site of the proposed action or an adjoining property been the location of an active or closed solid waste management facility?	☑	☐
If Yes, describe: _____ _____		
20. Has the site of the proposed action or an adjoining property been the subject of remediation (ongoing or completed) for hazardous waste?	☐	☑
If Yes, describe: _____ MOTOR OIL _____		

I CERTIFY THAT THE INFORMATION PROVIDED ABOVE IS TRUE AND ACCURATE TO THE BEST OF MY KNOWLEDGE

Applicant/sponsor/name: _____ Date: _____

Signature: _____ Title: _____

PRINT FORM



Disclaimer: The EAF Mapper is a screening tool intended to assist project sponsors and reviewing agencies in preparing an environmental assessment form (EAF). Not all questions asked in the EAF are answered by the EAF Mapper. Additional information on any EAF question can be obtained by consulting the EAF Workbooks. Although the EAF Mapper provides the most up-to-date digital data available to DEC, you may also need to contact local or other data sources to confirm data provided by the Mapper or to obtain data not provided by the Mapper.



Part 1 / Question 7 [Critical Environmental Area]	No
Part 1 / Question 12a [National or State Register of Historic Places or State Eligible Sites]	Yes
Part 1 / Question 12b [Archeological Sites]	No
Part 1 / Question 13a [Wetlands or Other Regulated Waterbodies]	Yes - Digital mapping information on local, New York State, and federal wetlands and waterbodies is known to be incomplete. Refer to the EAF Workbook.
Part 1 / Question 15 [Threatened or Endangered Animal]	No
Part 1 / Question 16 [100 Year Flood Plain]	No
Part 1 / Question 20 [Remediation Site]	Yes

PLANTING NOTES:

1. THE LANDSCAPE PLAN AND RELATED DETAILS ARE FOR LANDSCAPING INFORMATION ONLY. PLEASE REFER TO THE SITE GRADING & EROSION CONTROL PLANS FOR ALL OTHER INFORMATION.

2. THE CONTRACTOR SHALL GUARANTEE THAT ALL PLANTS, TREES AND SHRUBS SHALL BE HEALTHY AND FREE OF DISEASE FOR A PERIOD OF ONE YEAR AFTER SUBSTANTIAL COMPLETION AND ACCEPTANCE BY THE OWNER OR LANDSCAPE ARCHITECT. CONTRACTOR SHALL REPLACE ANY DEAD OR UNHEALTHY PLANTS AT CONTRACTOR'S EXPENSE. FINAL ACCEPTANCE SHALL BE MADE IF ALL PLANTS MEET THE GUARANTEE REQUIREMENTS INCLUDING MAINTENANCE. MAINTENANCE RESPONSIBILITIES INCLUDE CULTIVATING, SPRAYING, WEEDING, WATERING, TIGHTENING, PRUNING, MULCHING AND ANY OTHER OPERATIONS NECESSARY TO MAINTAIN PLANT VIABILITY. MAINTENANCE SHALL BEGIN IMMEDIATELY AFTER PLANTING AND CONTINUE UNTIL THE END OF THE ONE YEAR GUARANTEE PERIOD.

3. THE CONTRACTOR SHALL SUPPLY ALL LABOR, PLANTS AND MATERIALS IN QUANTITIES SUFFICIENT TO COMPLETE THE WORK SHOWN ON THE DRAWINGS AND LISTED IN THE PLANT SCHEDULE 4. ALL SHRUBS SHALL BE MULCHED TO A DEPTH OF 4" WITH SHREDDED HARDWOOD BARK WILLOW.

4. NO PLANT SHALL BE PLACED IN THE GROUND BEFORE ROUGH GRADING HAS BEEN COMPLETED PRIOR TO PLANTING FOR APPROVAL BY THE OWNER OR LANDSCAPE ARCHITECT. STAKING OF THE INSTALLED TREE MUST BE COMPLETED THE SAME DAY AS IT IS INSTALLED. ALL TREES SHALL BE STAKED OR GUYED PER DETAIL. SEE THIS SHEET FOR PLANTING DETAILS.

5. COORDIANTE PLANT MATERIAL LOCATIONS WITH SITE UTILITES. SEE SITE LAYOUT, GRADING AND UTILITY DRAWINGS FOR STORM, SANITARY AND WATER LINES.SEE LIGHTING PLANS FOR ELECTRICAL AND LIGHTING LAYOUT AND DETAILS. UTILITY LOCATIONS ARE APPROPRIATE.EXERCISE CARE WHEN DIGGING IN AREAS OF POTENTIAL CONFLICT WITH UNDERGROUND OR OVERHEAD UTILITIES. THE CONTRACTOR IS RESPONSIBLE FOR ANY DAMAGE DUE TO CONTRACTOR'S NEGLIGENCE AND SHALL REPLACE OR REPAIR ANY DAMAGE AT CONTRACTOR'S EXPENSE.

6. LANDSCAPE PLANTING POTS MUST BE FREE DRAINING, PAVEMENT, COMPACTED SUBGRADE, AND BLASTED ROCK SHALL BE REMOVED FROM MAIN TRAFFIC ISLANDS TO BE LANDSCAPED TO A DEPTH OF 2" OR TO A GREATER DEPTH IF REQUIRED BY PLANTING DETAILS OR EXPECTATIONS. REPLACE SOIL WITHIN ISLANDS WITH MODERATELY COMPACTED LOAM OR SAND LOAM FREE FROM STAKES AND RUBBISH. 1" OR GREATER IN DIAMETER AND ANY OTHER MATERIAL .HARDWARE TO PLANT GROWTH AND DEVELOPMENT. PLANTING INSTALLATION WITHIN ISLANDS SHALL BE AS DETAILED AND CONTAIN PLANTING DETAILS AS S.PECIFIED.

7 TIME OF PLANTING: NEW PLANT MATERIALS SHALL BE INSTALLED BETWEEN APRIL AND JUNE1 OR AFTER SEPTEMBER 15TH AND NO LATER THAN OCTOBER 31ST.

8. PLANTING SOIL MIXTURE FOR TREES AND SHRUBS: 1 PART PEAT MOSS, 3 PARTS TOPSOIL, FERTILIZER/LIVE (APPLY AS RECOMMENDED BY SOIL ANALYSIS), WYCHORZA INOCULATNT- "TRANSPLANT 1 STEP" AS MANUFACTURED OR ROOTS, INC OR APPROVED EQUAL. USE PER MANUFACUTER'S RECOMMENDATIONS FOR TREES AND SHRUBS

9. TOPSOIL SHALL BE INSTALLED AT A MINIMUM DEPTH OF 6" IN LAWN AREAS. CONTRACTOR SHALL SUBMIT TOPSOIL TO A CERTIFIED TESTING LABORATORY TO DETERMINE Ph, FERTILITY, ORGANIC CONTENT AND MECHANICAL COMPOSITION. THE CONTRACTOR SHALL SUBMIT TEST RESULTS FROM REGIONAL EXTENSION OFFICE OF USDA TO THE OWNER OR LANDSCAPE ARCHITECT FOR REVIEW AND APPROVAL. CONTRACTOR SHALL INCORPORATE AMENDMENTS FOR GOOD PLANT GROWTH AND PROPER SOIL ACIDITY RECOMMENDED FROM THE TOPSOIL TEST.

10. LAWN SEEDING MIXTURE (LOW-WOW): 15% KENTUCKY BLUEGRASS (POA PREATENESS-SINGLE VARIETY); 15% PERENNIAL RYEGRASS (LOUM PERENNE); 30% CREEPING AND FESCLE (FESTUCA RUBRA); 25% CHEWINGS FESCLE(FESTUCA RUBRA JAMESTOWN); 15% HARD FESCLE. SEEDING RATE: 4.5 LBS PER 1000 SF (ADD 10% TO QUANTITY IF HYPERSEEDED). SEEDING DATES: AUGUST 15- OCTOBER 1 AND APRIL 15-JUNE 15, UNLESS OTHERWISE APPROVED BY THE OWNER OR LANDSCAPE ARCHITECT.

11. ALL SLOPES GREATER THAN 30% RECEIVING A GRASS SEEDING SHALL BE COVERED WITH AN EROSION CONTROL BLANKET.

12. ALL DISTURBED AREAS NOT OTHERWISE DEVELOPED SHALL BE SEEDED WITH THE LAWN SEEDING MIXTURE.

(4) CONTEMPORARY GALVANIZED BIKE LOOP RACK

NOTE:
CONTRACTOR SHALL INSTALL RACK AS PER MANUFACTURER SPECIFICATIONS AND INTRUCTIONS.
PERFORM REGULAR INSPECTION AND MAINTENANCE AS REQUIRED.

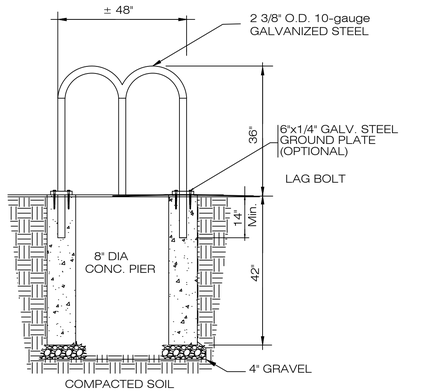

BIKE RACK DETAIL
NO SCALE

PROPOSED GALVANIZED (4) BIKE LOOP RACK

NOTES:
1. NEW PAVEMENT SHALL MEET N.Y.S. CODES, CITY OF POUGHKEEPSIE CODE AND STANDARDS. DISTURBED AREAS SHALL BE RESTORED TO ORIGINAL STATE.
2. ALL WORK SHALL COMPLY WITH CITY OF POUGHKEEPSIE CODE, CURRENT EDITION OF "N.Y.S. AND DUTCHESS COUNTY BEST MANAGEMENT PRACTICE MANUAL FOR EROSION AND SEDIMENT CONTROL NEW YORK STATE STORMWATER MANAGEMENT DESIGN MANUAL, AND ANY OTHER CODES AS APPLICABLE.

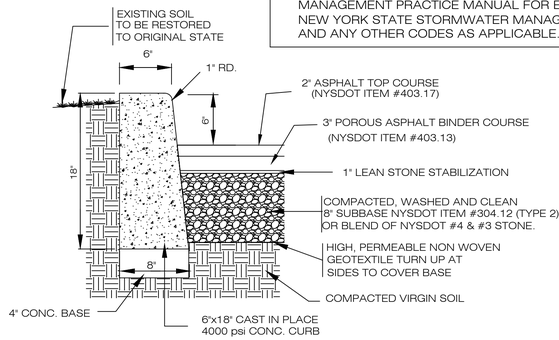

CONCRETE CURB DETAIL
N.T.S.

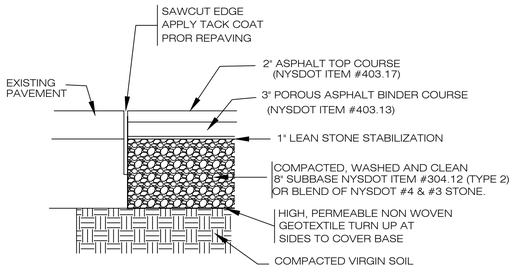

SAWCUT JOINT DETAIL
N.T.S.

NEW PAVEMENT DETAILS

LEGEND

- PROPERTY LINE
- EXISTING BUILDING
- SETBACK LINE
- AREA OF PROPOSED WORK
- UP — UTILITY POLE
- CB — CATCH BASIN
- RL — ROOF LEADER
- LP — LIGHT POLE
- HD — HYDRANT
- G — GAS
- WATER
- S — SEWER
- ASPHALT PAVEMENT
- PROPOSED LIGHT POLE
- PROPOSED GARAGE ADDITION
- EXISTING TREES
- EXISTING TREES TO BE REMOVED
- EXISTING SHRUBS
- PROPOSED TREE
- Eastern Service Berry
- Pink Magnolia
- BLOOMERANG LILAC
- SILT FENCE

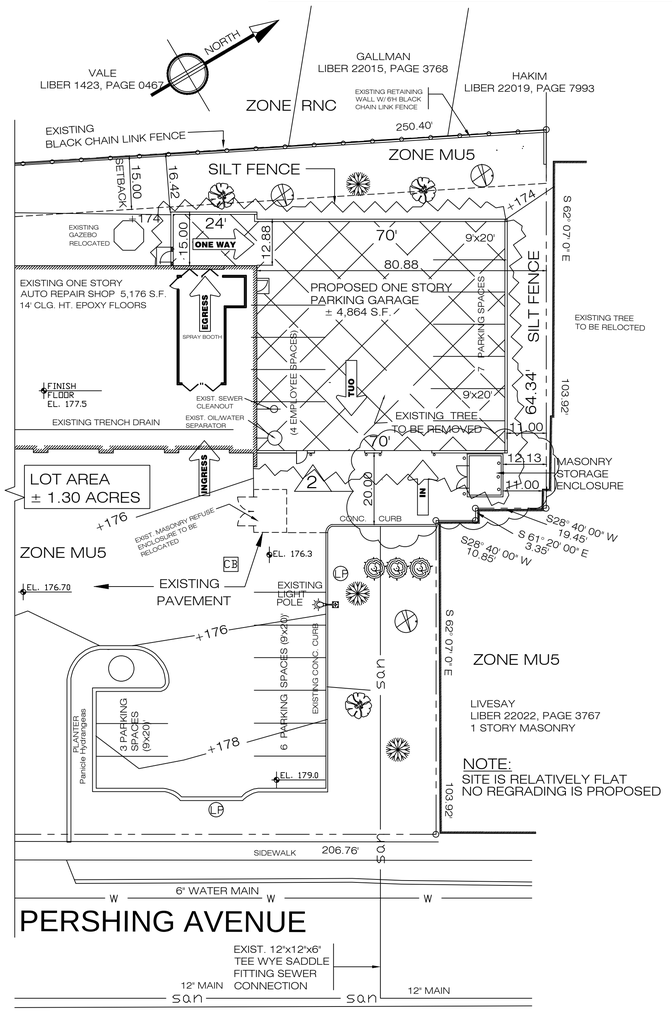

PERSHING AVENUE

EROSION CONTROL
SCALE: 1"=20'

NOT A SURVEY. SITE INFORMATION TAKEN FROM SURVEY BY STEVEN J. GREEN, PLS DATED NOVEMBER 6, 2023

PROGRESS PRINT

NOTE:
ANY UNAUTHORIZED ALTERATION OR ADDITION TO THESE PLANS IS A VIOLATION OF THE SECTION 7209 OF THE NEW YORK STATE EDUCATION LAW EXCEPT AS PER SECTION 7209, SUBDIVISION 2.

NOTES:
1. ALL CONNECTIONS, SEWER, GAS, WATER, ETC. SHALL BE PROPERLY SECURED AND PROECTED DURING EXCAVATION AND CONSTRUCTION.
2. PRIOR TO START OF EXCAVATION AND CONSTRUCTION, TREES TO BE RETAINED SHALL BE PROTECTED BY SILT FENCE, SNOW FENCE CONSTRUCTION FENCE OR EQUAL, WHICH WILL BE PLACED AT DRIP LINE OR SEVERAL FEET BEYOND. HOWEVER, THE FENCING SHALL NOT CROSS PUBLIC SIDEWALKS. NO STORAGE OR STOCKPILING OF CONSTRUCTION MATERIALS, DEBRIS OR EQUIPMENT SHALL OCCUR WITHIN THE FENCED AREAS.

NOTE:
EVERGREENS TO BE
3' HIGH MINMUM.
3' WIDE MINMUM.
3' MINMUM FROM PROPERTY LINE

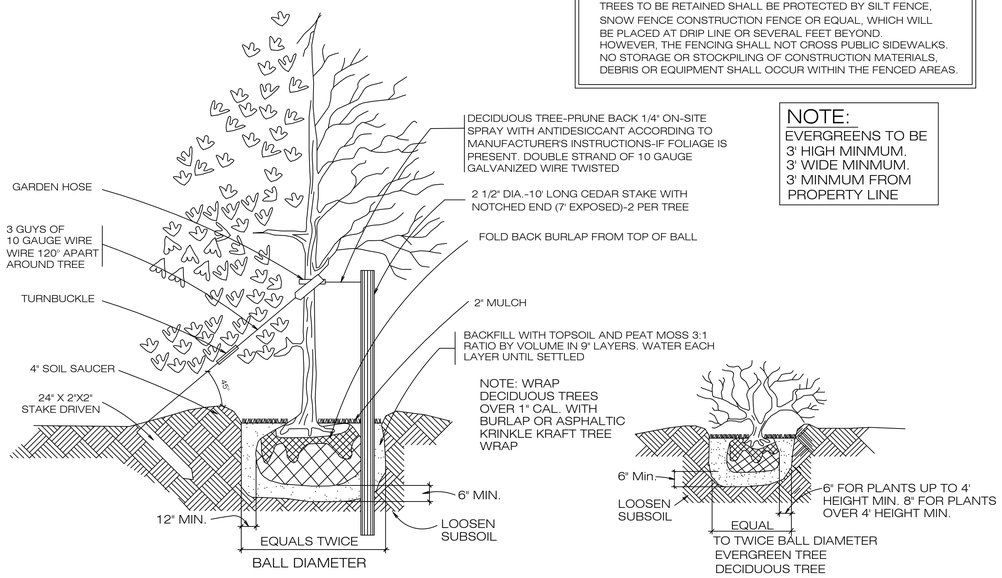

PLANTING DETAILS

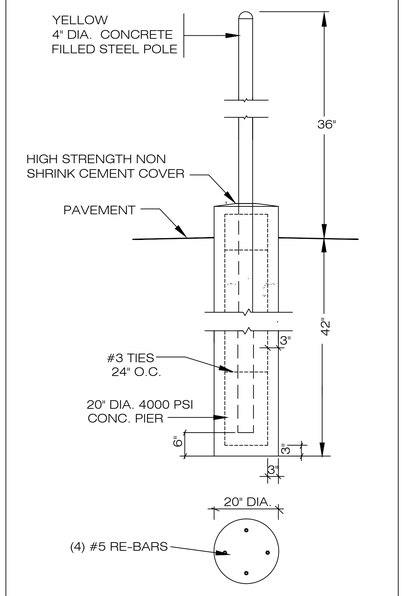

PROPOSED BOLLARD DETAIL
NO SCALE

NO. 2	ZONING REVIEW COMMENTS 8-18-2025
NO. 1	ZONING REVIEW COMMENTS 4-9-2025
REVISION	DATE:

STUDIO 90 DESIGN & PLANNING
4 FAIRWAY DRIVE, PAWLING, N.Y. 12564
TEL: 845 239 1456
Email: studio9@msn.com
KENNETH L. KAEFER, R.A.
ALFREDO DI PIETRO, DESIGNER
PETER MARCHETTI, P.E., CONSULTING ENGINEER

© ALL RIGHTS RESERVED. INCLUDING REPRODUCTION IN ANY FORM.

STATE OF NEW YORK · PETER G. MARCHETTI, JR. · 061528-1 · LICENSED PROFESSIONAL ENGINEER

PROJECT:
PROPOSED PARKING GARAGE ADDITION
EROSION CONTROL

AJ AUTOBODY LLC
16 PERSHING AVENUE
POUGHKEEPSIE, N.Y. 12601

DATE: 3-19-2025
JOB NO. 25-14
SCALE: AS NOTED
DWG. NO.: SP-2



SOUTH MAIN STREET



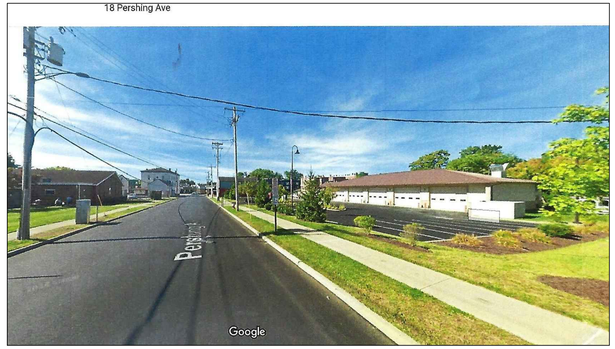



PERSHING AVENUE



SOUTH/WEST



WEST



PARTIAL WEST

EXISTING BUILDING



NORTH



NORTH WEST



EAST NORTH



NORTH

AREA OF PROPOSED WORK

NOTE:
ANY UNAUTHORIZED ALTERATION OR ADDITION TO THESE PLANS IS A VIOLATION OF THE SECTION 7209 OF THE NEW YORK STATE EDUCATION LAW EXCEPT AS PER SECTION 7209, SUBDIVISION 2.

NO.	
NO. 1	ZONING REVIEW COMMENTS 4-9-2025
REVISION	DATE:

STUDIO 90 DESIGN & PLANNING
4 FAIRWAY DRIVE, PAWLING, N. Y. 12564
TEL: 845 239 1456
Email: studio90@msn.com
KENNETH L. KAEFER, R.A.
ALFREDO DI PIETRO, DESIGNER
PETER MARCHETTI, P.E., CONSULTING ENGINEER
© ALL RIGHTS RESERVED, INCLUDING REPRODUCTION IN ANY FORM

PROJECT:
PROPOSED PARKING GARAGE ADDITION

PICTURES

DEVANAND JAIKARRAN
16 PERSHING AVENUE
POUGHKEEPSIE, N.Y. 12601

DATE:3-19-2025
JOB NO. 25-14
SCALE: NONE
DWG. NO.: P

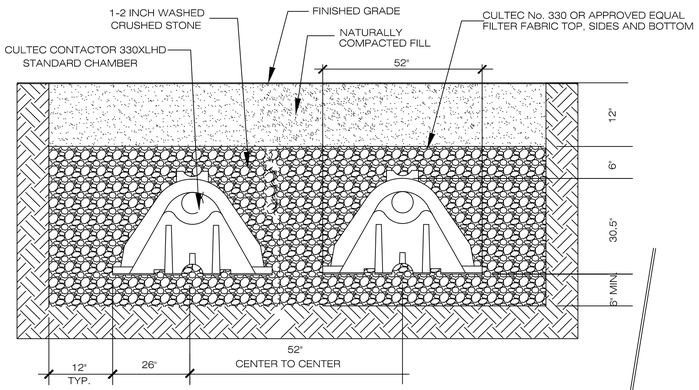

CULTEC RECHARGER 330XLHD HEAVE DUTY

TYPICAL CROSS SECTION

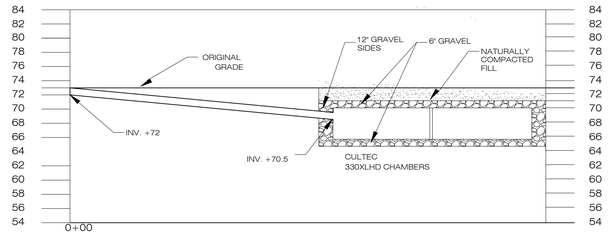

RECHARGER PROFILE

NTS

GENERAL NOTES

MODEL 330XLHD BY CULTEC, INC. OF BROOKFIELD, CT.
MODEL 330XLHD CHAMBERS MUST BE INSTALLED IN ACCORDANCE WITH ALL APPLICABLE LOCAL, STATE AND FEDERAL REGULATIONS.

CULTEC, Inc.	PH: (203) 775-4416
P.O. Box 330	PH: (800) 4-CULTEC
878 Federal Road	FX: (203) 775-1462
Brookfield, CT 06804 USA	www.cultec.com

IMPERVIOUS SURFACE	
DWELLING:	1,500 S.F.
PORCH:	100 S.F.
WALKS & CONC. PAD:	306 S.F.
TOTAL:	1,906 S.F.
	1,906/4500= 42.3%
POROUS ASPHALT:	± 736 S.F.

DESIGN NOTES:

SYSTEM SIZED USING 3" (inches) RAINFALL
SYSTEMS TO BE PLACED 10 FEET OR MORE FROM DWELLING, PROPERTY LINE AND TREES.

CONTRACTOR SHALL PROVIDE PERCOLATION TESTS AS REQUIRED

330XLHD CULTEC HOLDING CAPACITY
MINIMUM INSTALLED CHAMBER STORAGE =930 Gallons
DRAINAGE
AREA = 6264 sf
VOLUME =6264 sf x 3 in (.25 ft) =1566 cu.ft
1566 cu.ft x 7.48 gal/cu.ft =11714 gals
11714 gals / 930 gals/cultec = 12.60 = (13) 330XLHD Cultec

NOTE:
DRAIN PIPES
ROOF LEADER & FOOTING DRAINS TO BE 6" PVC PIPE CONNECTED TO 6" LINE TO CULTEC RECHARGE

SQUARE FOOTAGE	
EXISTING	
AUTO REPAIR SHOP:	5,176 S.F.
OFFICE SPACE:	2,520 S.F.
	7,696 S.F.
PROPOSED:	
PARKING GARAGE:	4,864 S.F.
TOTAL	12,560 S.F.

PROPOSED:	
PARKING GARAGE:	4,864 S.F.
NEW PAVEMENT:	±1,400 S.F.
TOTAL:	6,264 S.F.

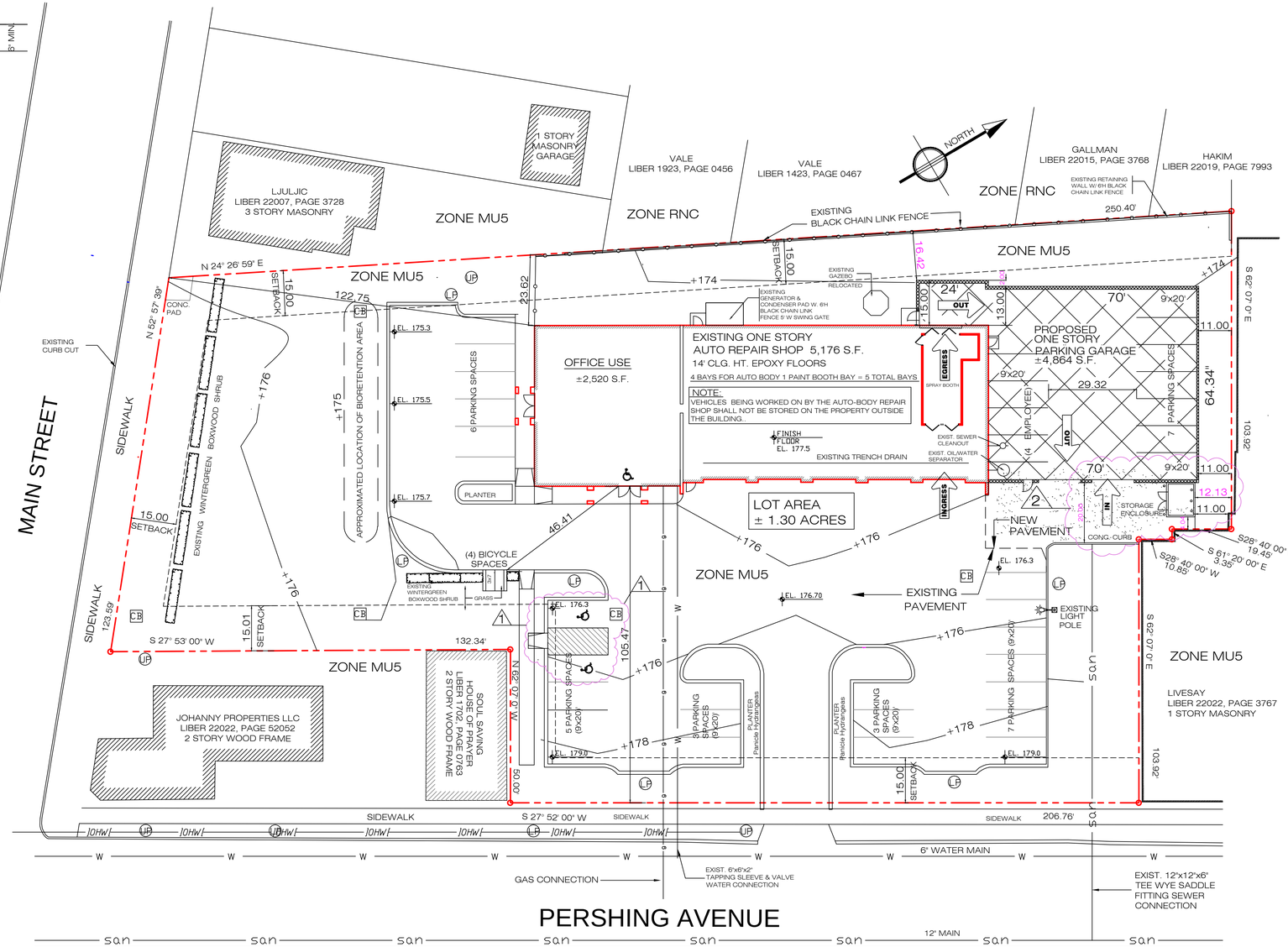

PLOT PLAN

SCALE: 1"=20'

NOT A SURVEY. SITE INFORMATION TAKEN FROM SURVEY BY STEVEN J. GREEN, PLS DATED NOVEMBER 6, 2023

PROGRESS PRINT
NOT FOR CONSTRUCTION

NOTE:
ANY UNAUTHORIZED ALTERATION OR ADDITION TO THESE PLANS IS A VIOLATION OF THE SECTION 7209 OF THE NEW YORK STATE EDUCATION LAW EXCEPT AS PER SECTION 7209, SUBDIVISION 2.

LEGEND

- PROPERTY LINE
- EXISTING BUILDING
- SETBACK LINE
- AREA OF PROPOSED WORK
- UP — UTILITY POLE
- CB — CATCH BASIN
- RL — ROOF LEADER
- LP — LIGHT POLE
- HD — HYDRANT
- g — GAS
- w — WATER
- S — SEWER
- EXISTING TREES
- EXISTING SHRUBS
- PROPOSED TREE Eastern Service Berry
- Pink Magnolia
- BLOOMERANG LILAC
- POROUS PAVEMENT
- ASPHALT PAVEMENT
- PROPOSED LIGHT POLE
- CULTEC RECHARGER 330XLHD

NO. 2	ZONING REVIEW COMMENTS 8-18-2025
NO. 1	ZONING REVIEW COMMENTS 4-9-2025
REVISION	DATE:

STUDIO 90 DESIGN & PLANNING
4 FAIRWAY DRIVE, PAWLING, N. Y. 12564
TEL. 845 239 1456
Email: studio90@msn.com
KENNETH L. KAEFER, R.A.
ALFREDO DI PIETRO, DESIGNER
PETER MARCHETTI, P.E., CONSULTING ENGINEER

© ALL RIGHTS RESERVED. INCLUDING REPRODUCTION IN ANY FORM.

STATE OF NEW YORK · PETER G. MARCHETTI JR. · 081529-1 · LICENSED PROFESSIONAL ENGINEER

PROJECT:
PROPOSED PARKING GARAGE ADDITION
STORMWATER MANAGEMENT

AJ AUTOBODY LLC
16 PERSHING AVENUE
POUGHKEEPSIE, N.Y. 12601

DATE: 3-19-2025
JOB NO. 25-14
SCALE: 1"=20'
DWG. NO.: SP-3

CITY OF POUGHKEEPSIE
DEVELOPMENT DEPARTMENT
JANUARY 27, 2026

16 PERSHING AVENUE: SITE PLAN
Application for a proposed addition to an existing automobile repair shop including a new one story attached parking garage. Owner: AJ Autobody LLC; Applicant: Devanand Jaikarran; Consultant: Studio 90 Design & Planning; Grid #PB2025-113; Zoning District: MU5; File #PB2025-113

Project Description
The project has been determined to be an Unlisted Action under SEQRA.

Recommendation
- It is recommended that a coordinated SEQRA review of this project be carried out and the Planning Board declare lead agency pursuant to SEQRA.
- The project requires several area variances regarding setbacks, build-to-frontage-minimum height, driveway width and transparency. The project also requires a use variance for the expansion of a nonconforming building in excess of 25% of its area.
- Expansion of non conforming uses are subject to planning board approval provided that the finds that "such expansion will not diminish the compatibility of said building with the existing or potential use of immediately adjacent properties."

Project History
First Appearance 1/27/26

Documents Entered into Record

Date	Description	Author	Comments
9/26/25	Application	Devanand Jaikarran	Site Plan Application
9/26/25	Survey	Steven Green PLS	September 2023 unsigned
9/26/25	SEQRA	Devanand Jaikarran	EAF Part I
9/26/25	Site Plan	Studio 90 Design&Planning	4/9/25 Plot Plan, SP-1, SP-2, SP-3, P, A1, A2, A3

Comments Received

Date	Author	Comments
	Vincent Parise, Deputy Fire Chief	

	Engineering Department	
	Captain John Zeltman, COP PD	
	Eric Philipp, COP Bldg Inspector	
	Dylan Tuttle, DC Dept of Planning	

Motions and Resolutions
With regard to the City's file number #PB2025-113 and 16 Pershing Ave

The Planning Board declares lead agency pursuant to SEQRA.
Motion:
Second:
Vote:

CITY OF POUGHKEEPSIE
NEW YORK
Development DEPARTMENT
CIVIC CENTER PLAZA, 2ND FLOOR
POUGHKEEPSIE, NY 12601
Phone: (845) 451-4010 Fax: (845) 451-4006

OFFICE USE ONLY
CODE: _____
ID #_____
FEES: $1,000,00

APPLICATION FOR REZONING

PROJECT ADDRESS(ES): Milton Street, City of Poughkeepsie, Dutchess County, New York

GRID #(s): 131300-6162-73-623227

(ADD ADDITIONAL SHEETS IF NECESSARY)

APPLICANT: Maselo Realty, LLC (Simon Abikhzer)
Street: 18 Eastview Road
Town/Zip: Monsey, NY 10952

Phone: 845-341-7395
Email:

Applicant is: X Owner _____ Contract Vendee

If Applicant is a Corporation, LLC, LP, PC, D/B/A or Partnership, provide the name of the principal(s) who will be representing the rezoning application:
Simon Abikhzer

If applicant is a Corporation, LLC, LP, PC, D/B/A or Partnership, provide names of all shareholders, members, partners and/or officers:
Simon Abikhzer

Date that Corporation, LLC, LP, PC D/B/A or Partnership was formed or registered to do business in New York State: 7/26/2004

IF THE APPLICANT IS NOT THE OWNER, DOCUMENTATION AUTHORIZING THE APPLICANT TO PURSUE APPROVALS, SUCH AS AN EXECUTED CONTRACT OF SALE OR OPTION TO PURCHES, MUST BE SUBMITTED.
Not applicable - Owner is applicant.

CONSULTANT: LaBella Associates (Caren LoBrutto)
Street: 21 Fox Street
Town/Zip: Poughkeepsie, NY 12601

Phone: (845) 486-1458
Email:

CITY OF POUGHKEEPSIE
NEW YORK
Development DEPARTMENT
CIVIC CENTER PLAZA, 2ND FLOOR
POUGHKEEPSIE, NY 12601
Phone: (845) 451-4010 Fax: (845) 451-4006

APPLICATION FOR REZONING

PROJECT INFORMATION

ADDRESS: Milton Street, City of Poughkeepsie, Dutchess County, New York

CURRENT ZONING: Residential Neighborhood A (RNA)

PROPOSED ZONING: Residential Neighborhood D (RND)

DESCRIBE THE PROJECT FOR WHICH THE REZONING IS REQUESTED:

Proposed 63-unit multifamily development (31 one-bedroom units and 32 two-bedroom units) clustered within two buildings.

Will the project require any of the following approvals after rezoning? Please check all that apply:

- [X] Site Plan from the Planning Board
- [ ] Special Permit from the Planning Board
- [ ] Subdivision (lot line adjustment
- [ ] Use variance from the Zoning Board of Appeals
- [ ] Area variance(s) from the Zoning Board of Appeals

APPLICANT'S CERTIFICATION

By his/her signature, the applicant vows that: 1) He/She has read this application and is familiar with its contents and that the information provided herein is complete and true to the best of the applicant's knowledge; 2) He/She has read, is familiar with, and understands the requirements of the City of Poughkeepsie provision(s) affecting and/or regulating the project for which this application is made; 3) He/She agrees to comply with the requirements of the City of Poughkeepsie affecting and/or regulating the project for which this application is made, including any general or special conditions of permits or approvals granted by any board, agency or department of the City of Poughkeepise; and, 4) He/She has read this statement and understands its meaning and terms.

Applicant's signature

10/24/25
Date

LaBella
Powered by partnership.

January 21, 2026

JAN 21 2026

RECEIVED

City of Poughkeepsie Planning Board
Anne Saylor, Chair
62 Civic Center Plaza
Poughkeepsie, NY 12601

Re: Highview at the Fallkill Creek Proposed 63-Unit Residential Development
(Maselo Realty LLC)
Milton Street (Tax Parcel 131300-6162-73-623227)
City of Poughkeepsie, Dutchess County, NY
LaBella Project Number 81947

Dear Chair and Board:

The Applicant and Owner, Maselo Realty, LLC, is proposing the rezoning of an 8.713-acre tax parcel on Milton Street in the City of Poughkeepsie from Residential Neighborhood A (RNA) to Residential Neighborhood D (RND) for the construction of a 63-apartment unit clustered multifamily development within two buildings with one access off Milton Street. The parcel is identified as parcel number 131300-6162-73-623227 on the City of Poughkeepsie Tax Map. The Town of Poughkeepsie abuts the eastern edge of the property.

The parcel is currently undeveloped and zoned for Residential Neighborhood A (RNA) within which multifamily (i.e. 5+ unit) residential development is not permitted. Therefore, to facilitate the proposed project, the Applicant submitted a rezoning application on October 28, 2025 to petition the City for a rezoning of the property from RNA to RND by the Common Council. Upon completion of the rezoning, the Applicant will seek site plan approval from the Planning Board.

Project Background

On April 25, 2006, the City of Poughkeepsie Planning Board granted site plan approval for the construction of a 120-unit condominium complex to be known as Highview at the Fallkill Creek, located on the north side of Milton Street. The Applicant was Phoenix Capital Partners, LLC. The parcel was zoned as Medium High-Density Residential (R-4) at that time, which would have permitted a maximum of 140 dwelling units based on the R-4 requirements and lot size. The original project was never undertaken, and site plan approvals lapsed. The site was subsequently rezoned to Medium Low-Density Residence District (R-2) in October 2010.

When the Applicant decided to pursue the project again in 2019, the parcel was zoned for Medium Low-Density Residential (R-2) within which multifamily development was not permitted. The project underwent two community meetings in 2019 and has received support from then Councilwoman Flowers. Therefore, to facilitate the proposed project, the Applicant petitioned the City for a rezoning of the property from R-2 to PRD by the Common Council. The Planning Board as lead agency determined that the action was an unlisted action and upon examination of the Full Environmental Assessment Form (FEAF) and 6 N.Y.C.R.R Section 617.7 of the State Environmental Quality Review Act (SEQRA), adopted a negative declaration on January 20, 2021. The rezoning approval was granted by the Common Council on February 16, 2021 (Common Council Ordinance O-21-01).

The Common Council and City's Mayor approved the amendment to the Zoning Map on February 18, 2021. On May 25, 2021, the owner filed an application for site plan approval from the Planning Board for the project under the PRD regulations. After filing an area variance application to the Zoning Board of Appeals on June 6, 2021, the Applicant received approval for three area variances on September 14, 2021 to enable the proposed development.

Since then, the application has been on numerous agendas of the Planning Board and multiple extensions have been granted for the rezoning petitions; however, the project planning stalled due to sewer infrastructure uncertainties.

On September 6, 2024, a Municipal Consent to Form a Sewage-Works Corporation was approved by the Common Council and the Mayor resolving the sewer infrastructure uncertainties. On November 4, 2024 the property was rezoned to RNA as part of the Common Council's adoption of the City of Poughkeepsie Zoning Ordinance, along with entire neighborhood of primarily single-family dwellings to the south (which provides the only access to the property).

Accordingly, the Applicant seeks a rezoning to the RND Zoning District and site plan application to permit the proposed the 63-unit development. As requested, please find enclosed a copy of the site plan application and waterfront assessment form.

We look forward to discussing the project with you again at the next meeting on January 27, 2026. Please call 845-486-1458 or email me at clobrutto@labellapc.com if you have any questions or need anything further.

Thank you.

Sincerely,

Senior Planner [Regional Leader
LaBella Associates

Cc: Maselo Realty, LLC

HIGHVIEW AT THE FALLKILL CREEK

MILTON STREET, CITY OF POUGHKEEPSIE
DUTCHESS COUNTY, NEW YORK 12601

BULK DIMENSIONAL TABLE			
ZONING DISTRICT: RESIDENTIAL NEIGHBORHOOD D (RND)			
ALL REQUIREMENTS BELOW ARE FROM THE OCTOBER 2024 CITY OF POUGHKEEPSIE ZONING AND LAND USE REGULATIONS, CHAPTER 19, ARTICLE 2, SECTION 19-2.4			
	UNITS	**REQUIRED**	**PROPOSED**
2. LOTS & PARKING			
LOT AREA AND COVERAGE			
A. MINIMUM LOT AREA (5+ UNITS)	SF	8,000	379,538
B. MINIMUM LOT WIDTH	FT	30	340
C. MAXIMUM LOT COVERAGE (ALL IMPERVIOUS)	%	80%	21%
PARKING LOCATION & ACCESS			
D. MINIMUM PRIMARY STREET SET-BACK (PRIMARY STRUCTURE PRIMARY STREET SETBACK + 5-FT)	FT	5	176
E. MINIMUM SECONDARY STREET SETBACK	FT	10	N/A
F. MINIMUM SIDE YARD SETBACK	FT	10	12
G. MINIMUM REAR YARD SETBACK	FT	5	265
H. MAXIMUM DRIVEWAY WIDTH	FT	15	N/A
3. BUILDING PLACEMENT			
PRIMARY STRUCTURE SETBACKS			
A. MINIMUM PRIMARY STREET SET-BACK	FT	0	209
B. MINIMUM SECONDARY STREET SETBACK	FT	10	N/A
C. MINIMUM SIDE SETBACK	FT	0	116
D. MINIMUM REAR SETBACK	FT	15	176
ACCESSORY STRUCTURE SETBACKS			
D. MINIMUM PRIMARY STREET SET-BACK	FT	NOT PERMITTED	N/A
E. MINIMUM SECONDARY STREET SETBACK	FT	NOT PERMITTED	N/A
F. MINIMUM SIDE SETBACK	FT	5	50
G. MINIMUM REAR SETBACK	FT	5	268
4. BUILDING COMPOSITION			
HEIGHT			
A. MAXIMUM PRIMARY BUILDING HEIGHT	FT	55	35
MAXIMUM PRIMARY BUILDING HEIGHT	STORIES	4	3
MAXIMUM ACCESSORY BUILDING/STRUCTURE HEIGHT	FT	25	
ENTRANCE			
B. PRIMARY STREET FACING ENTRANCE	-	REQUIRED	PROVIDED
C. SIDEWALK FROM ENTRANCE TO PUBLIC SIDEWALK	-	REQUIRED	PROVIDED
DENSITY			
D. DWELLING UNITS	PER LOT	5+	63
ADDITIONAL REQUIREMENTS BELOW ARE FROM THE OCTOBER 2024 CITY OF POUGHKEEPSIE ZONING AND LAND USE REGULATIONS, CHAPTER 19, ARTICLES 5&6, SECTION SPECIFIED BELOW			
	UNITS	**REQUIRED**	**PROPOSED**
FALLKILL CREEK SETBACK (SECTION 19-5.17)	FT	30	128
MINIMUM PARKING LOT LANDSCAPED AREA AS A PERCENTAGE OF TOTAL PARKING LOT AREA (SECTION 19-6.5)	%	7%	21%
MINIMUM PARKING LOT LANDSCAPED AREAS INCLUDING 80-SF OF LAND WITH 1 MEDIUM SHADE TREE (SECTION 19-6.5)	1 PER 20 PARKING SPACES	7	9

PARKING TABLE					
ZONING DISTRICT: RESIDENTIAL NEIGHBORHOOD D (RND)					
USE: MULTIFAMILY DWELLING					
REQUIREMENTS BELOW ARE FROM THE OCTOBER 2024 CITY OF POUGHKEEPSIE ZONING AND LAND USE REGULATIONS, CHAPTER 19, ARTICLE 6, SECTION 19-6.2 AND FROM THE DOJ 2010 ADA STANDARDS FOR ACCESSIBLE DESIGN					
REQUIREMENT	**PROPOSED # DWELLING UNITS**	**REQUIRED # SPACES**	**PROPOSED # SPACES**	**REQUIRED # ADA SPACES**	**PROVIDED # ADA SPACES**
1.25 PARKING SPACES PER DWELLING UNIT	63	79	124	5	5

DRAWING INDEX	
Sheet Number	Sheet Title
G001	COVER SHEET
G002	NOTES & LEGENDS
C100	EXISTING CONDITIONS PLAN
C120	DEMOLITION & TREE REMOVALS PLAN
C130	SITE PLAN
C140	GRADING & DRAINAGE PLAN
C150	EROSION & SEDIMENT CONTROL PLAN
C160	UTILITY PLAN
C180	LANDSCAPING PLAN
C190	PHOTOMETRIC PLAN
C200	VEHICLE MANEUVERING PLAN
C530	SITE DETAILS 1
C531	SITE DETAILS 2
C540	STORMWATER DETAILS
C550	EROSION & SEDIMENT CONTROL DETAILS
C560	WATER DETAILS 1
C561	WATER DETAILS 2
C570	SANITARY SEWER DETAILS
C580	LANDSCAPING DETAILS

CITY PLANNING BOARD
CITY OF POUGHKEEPSIE, NEW YORK
SITE PLAN APPROVAL

FILE NO:
PROJECT NAME:
PROJECT LOCATION:
APPLICANT:

OFFICIALLY APPROVED AT THE PLANNING BOARD

MEETING HELD THE _____ DAY OF _____ 2____

PLANNING CHAIR:

DESIGNEE:

DATE SIGNED:

CONDITION(S):

CITY OF POUGHKEEPSIE DEPARTMENTAL SIGNATURES

FIRE CHIEF	DATE
POLICE CHIEF	DATE
BUILDING INSPECTOR	DATE
CITY ENGINEER	DATE
COMMISSIONER OF PUBLIC WORKS	DATE

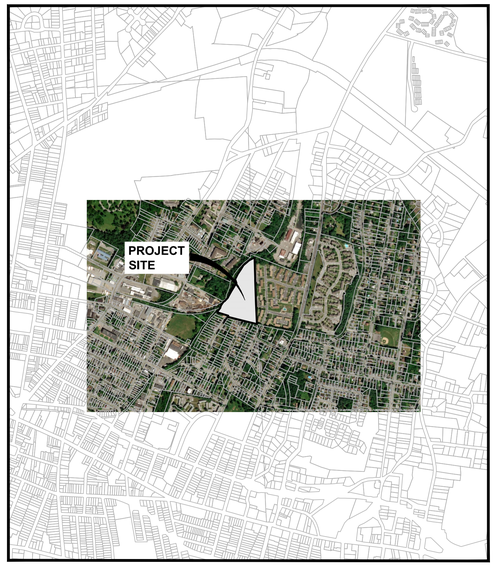

AREA MAP
SCALE: 1"=1000'



LOCATION MAP
SCALE: 1"=500'

ADJOINING PARCELS

1. GEORGES, ANTHONY J
JOHNSON, IRVIN
50 W AMOLD RD
POUGHKEEPSIE, NY 12601
TAX ID No: 131300-6162-74-626174

2. GEORGES, ANTHONY J
JOHNSON, IRVIN
W AMOLD RD
POUGHKEEPSIE, NY 12601
TAX ID NO: 131300-6162-74-631172

3. GEORGES, ANTHONY J
JOHNSON, IRVIN
50 W AMOLD RD
POUGHKEEPSIE, NY 12601
TAX ID NO: 131300-6162-74-636171

4. KANE, JOSEPH
SCHOONMAKER, AMANDA
146 CORLIES AVE
POUGHKEEPSIE, NY 12601
TAX ID NO: 131300-6162-74-643173

5. JOSEPH ASTACIO (PRIMARY)
ANJANETTE BURGOS (ADDITIONAL)
CHRISTIAN F. BURGOS (ADDITIONAL)
142 CORLIES AVE
POUGHKEEPSIE, NY 12601
TAX ID No: 131300-6162-74-642168

6. JOSEPH ASTACIO (PRIMARY)
ANJANETTE BURGOS (ADDITIONAL)
CHRISTIAN F. BURGOS (ADDITIONAL)
142 CORLIES AVE
POUGHKEEPSIE, NY 12601
TAX ID NO: 131300-6162-74-641163

7. KANE, JOSEPH
SCHOONMAKER, AMANDA
146 CORLIES AVE
POUGHKEEPSIE, NY 12601
TAX ID NO: 134689-6162-19-649171

8. JOSEPH ASTACIO (PRIMARY)
ANJANETTE BURGOS (ADDITIONAL)
CHRISTIAN F. BURGOS (ADDITIONAL)
142 CORLIES AVE
POUGHKEEPSIE, NY 12601
TAX ID NO: 134689-6162-19-648165

9. WOOD, NICHOL SL
143 CORLIES AVE
POUGHKEEPSIE, NY 12601
TAX ID NO: 134689-6162-19-663164

10. MOUNTAIN BROOK GARDENS LLC
134 INNIS AVE
POUGHKEEPSIE, NY 12601
TAX ID No: 134689-6162-19-685225

11. CITY OF POUGHKEEPSIE
26 HOWARD ST
POUGHKEEPSIE, NY 12601
TAX ID No: 131300-6162-66-705372

12. CITY OF POUGHKEEPSIE
25 HOWARD ST
POUGHKEEPSIE, NY 12601
TAX ID No: 134689-6162-15-668303

13. HIGHRIDGE GARDENS HOUSING
140-150 HUDSON AVE EXT
POUGHKEEPSIE, NY 12601
TAX ID NO: 131300-6162-65-590267

14. BSM3 HOLDINGS, LLC
1913 ROUTE 44
PLEASANT VALLEY, NY 12569
TAX ID NO: 131300-6162-73-567244

15. MILLENS , JOAN TRUSTEE (PRIMARY)
LENEFSKY , DAVID TRUSTEE (ADDITIONAL)
MULA , PAUL TRUSTEE
20 VAN KLEECK DR
POUGHKEEPSIE, NY 12601
TAX ID NO: 131300-6162-73-528212

16. TOWN OF POUGHKEEPSIE
COTTAGE ST REAR
POUGHKEEPSIE, NY 12601
TAX ID NO: 131300-6162-73-562189

17. SMITH , HEYWOOD V (PRIMARY)
GREEN SMITH , PAMELA (ADDITIONAL)
45 FITCHETT ST
POUGHKEEPSIE, NY 12601
TAX ID No: 131300-6162-73-587190

18. JOHNSON , ALLEN JR III
FITCHETT ST
POUGHKEEPSIE, NY 12601
TAX ID No: 131300-6162-73-602181

19. JOHNSON , ALLEN JR III
51 W ARNOLD RD
POUGHKEEPSIE, NY 12601
TAX ID No: 131300-6162-73-612178

20. BSM3 HOLDINGS, LLC
1913 ROUTE 44
PLEASANT VALLEY, NY 12569
TAX ID NO: 131300-6162-73-557223

21. PHI-TAN LLC
165 SMITH ST.
POUGHKEEPSIE, NY 12601
TAX ID NO: 131300-6162-72-461234

MASELO REALTY
18 EASTVIEW ROAD
MONSEY, NY 10952
PROJECT NO: CZ81947.00
OCTOBER 28, 2025

RECORD OWNER/APPLICANT:
MASELO REALTY LLC
18 EASTVIEW RD
MONSEY NY 10952

PROJECT SITE:
MILTON STREET
CITY OF POUGHKEEPSIE,
DUTCHESS COUNTY,
NEW YORK, 12601

SITE CIVIL ENGINEER:
LABELLA ASSOCIATES
21 FOX STREET, POUGHKEEPSIE, NY 12601
PHONE: (845) 454-3980

TAX MAP INFORMATION:
CITY OF POUGHKEEPSIE, DUTCHESS COUNTY
SECTION 131300 - 6162 - BLOCK 73 - LOT 623227-0000

AREA:
TOTAL PARCEL ACREAGE: 8.713 ACRES
PROJECT DISTURBED ACREAGE: 5.26 ACRES

Dig Safely. New York
Call Before You Dig
Wait The Required Time
Confirm Utility Response
Respect The Marks
Dig With Care
800-962-7962
www.digsafelynewyork.com

UDIG·NY
SAFE DIGGING STARTS HERE

LaBella
Powered by partnership.
21 Fox Street
Poughkeepsie, NY 12601
(845) 454-3980
labellapc.com

NOT FOR CONSTRUCTION
EXP: ##/##/20##
EXP: ##/##/20##

CERTIFICATE OF AUTHORIZATION NUMBER:
PROFESSIONAL ENGINEERING: 0021272
LAND SURVEYING: 0021271
GEOLOGICAL: 0021659

It is a violation of New York Education Law Art. 145 Sec. 7209 & Art. 147 Sec. 7307, for any person, unless acting under the direction of a licensed architect, professional engineer, or land surveyor, to alter an item in any way. If an item bearing the seal of an architect, engineer, or land surveyor is altered; the altering architect, engineer, or land surveyor shall affix to the item their seal and notation "altered by" followed by their signature and date of such alteration, and a specific description of the alteration.

© 2025 LaBella Associates

MASELO REALTY LLC
18 EASTVIEW ROAD
MONSEY, NY 10952

HIGHVIEW AT THE FALLKILL CREEK
CITY OF POUGHKEEPSIE
DUTCHESS COUNTY, NEW YORK

NO:	DATE:	DESCRIPTION:
Revisions		

PROJECT NUMBER: CZ81947.00
DRAWN BY: JRR
REVIEWED BY: KGA
ISSUED FOR: PLANNING BOARD REVIEW
DATE: 10/28/2025
DRAWING NAME:

COVER SHEET

DRAWING NUMBER:

G001

Drawing Name: B:\GLOBAL\Legacy\Chazan\Projects\81900-81999\81947.00 - Highview II\DWG\00_CG01_81947_TITLE.dwg
Xrefs Attached: XB-ROPE_81947-00_Sht42
Date Plotted: 10/27/2025 - 4:24pm

LEGEND:

LAYOUT:

- LOT LINE
- SETBACK LINE
- EASEMENT LINE
- BUILDING
- PAVED ROAD / DRIVEWAY / PARKING AREA
- ROAD CENTER LINE
- SIDEWALK
- CURB/WING GUTTER (CONC. CURB)
- GRAVEL DRIVEWAY
- WORKLIMITS
- GUIDERAIL
- CHAIN LINK FENCE
- STOCKADE FENCE
- CONCRETE
- STABILIZED CONSTRUCTION ENTRANCE
- ROAD LINING & STRIPING
- GRAVEL PARKING AREA

SYMBOLS:

- SIGN
- SIGN
- BOLLARD
- LIGHTED BOLLARD
- CATCH BASIN
- YARD DRAIN
- CLEAN OUT / DOWN SPOUT
- FLARED END SECTION
- DRAINAGE MANHOLE
- SANITARY MANHOLE
- CLEANOUT
- WELL
- WATER VALVE
- HYDRANT
- REDUCER
- CONTROL BOX (CB)
- ELECTRIC MANHOLE
- CABLE TV PEDESTAL
- GAS VALVE
- LIGHT POLE
- LIGHT WALL PACK
- POST AND LUMINAIRE
- MAILBOX (MB)
- MONUMENT
- PARKING COUNT (25)
- SOIL BORING
- TEST PIT
- TELEPHONE MANHOLE
- TELEPHONE PEDESTAL
- ELECTRIC TRANSFORMER
- TRAFFIC SIGNAL CONTROL BOX (TSB)
- TRAFFIC SIGNAL HEAD
- TRAFFIC SIGNAL POLE (TSP)
- UTILITY POLE
- UTILITY POLE W/ LIGHT
- UTILITY POLE W/ GUY WIRE

GRADING & EROSION CONTROL:

- 500 — 10 FT CONTOUR
- 148 — 501.25 — 2 FT CONTOUR / SPOT ELEVATIONS
- TREE LINE
- SHRUB LINE
- DRAINAGE SWALE
- ORANGE CONSTRUCTION FENCE
- SILT FENCE / FIBER LOG
- CHECK DAM WITH DITCH FLOW DIRECTION
- TD — TD — TEMPORARY DIVERSION SWALE
- STRAW BALE DIKE / FIBER ROLL
- INLET PROTECTION
- PIPE OUTLET SEDIMENT TRAP (TD)
- SPOILS STORAGE AREA
- STABILIZED CONSTRUCTION ENTRANCE
- RIPRAP
- CONCRETE WASH OUT AREA
- TREE PROTECTION

UTILITIES:

- OHW — OVERHEAD WIRES
- S — SANITARY SEWER LINE
- FM — FORCE MAIN
- W — WATER LINE
- ST — STORM DRAIN LINE
- E — ELECTRIC LINE
- G — GAS LINE
- SIZE & TYPE — CULVERT W/ END SECTION

DEMO:

- EXISTING FEATURE TO BE REMOVED
- EXISTING TREE TO BE REMOVED
- EXISTING SITE FEATURE TO BE REMOVED
- DEMO ASPHALT
- DEMO BUILDING
- DEMO CONCRETE
- DEMO GRAVEL SECTION
- DEMO RIP RAP SECTION
- DEMO ATHLETIC TRACK
- DEMO TREES AND SHRUBS
- N.I.C. — NOT IN CONTRACT
- EXISTING STRUCTURE TO BE REMOVED, N.I.C

DEMOLITION PLAN NOTES:

DEMOLITION NOTES:

1. REFER TO REQUIREMENTS OUTLINED IN THE EROSION & SEDIMENTS CONTROL PLANS & NOTES PRIOR TO COMMENCEMENT OF WORK.
2. BUILDING/STRUCTURE TO BE DEMOLISHED ARE SHOWN FOR REFERENCE PURPOSES ONLY AND ARE NOT TO BE DEMOLISHED AS PART OF THIS WORK. PRIOR TO DEMOLISHING ANY BUILDINGS/STRUCTURES, THE CONTRACTOR SHALL PERFORM A PRE-DEMOLITION SURVEY IN ACCORDANCE WITH STATE AND FEDERAL REGULATIONS GOVERNING THE DISPOSAL OF SOLID WASTE. THE CONTRACTOR SHALL OBTAIN ALL NECESSARY PERMITS AND APPROVALS BY THE AUTHORITY HAVING JURISDICTION.
3. CONFORM TO APPLICABLE CODE FOR DEMOLITION OF STRUCTURES, SAFETY OF ADJACENT STRUCTURES, DUST CONTROL, RUNOFF CONTROL, AND HAULING, DISPOSAL AND STORAGE OF DEBRIS.
4. PROVIDE, ERECT, AND MAINTAIN TEMPORARY BARRIERS AND SECURITY DEVICES.
5. MAINTAIN EXISTING UTILITIES TO REMAIN IN SERVICE AND PROTECT THEM AGAINST DAMAGE DURING SELECTIVE DEMOLITION OPERATIONS. DO NOT INTERRUPT EXISTING UTILITIES SERVING OPERATING FACILITIES, EXCEPT WHEN AUTHORIZED IN WRITING BY OWNER AND AUTHORITIES HAVING JURISDICTION.
6. NOTIFY ADJACENT OWNERS OF WORK THAT MAY AFFECT THEIR PROPERTY, POTENTIAL NOISE, UTILITY OUTAGE, OR DISRUPTION. COORDINATE WITH OWNER.
7. PREVENT MOVEMENT OR SETTLEMENT OF ADJACENT STRUCTURES. PROVIDE BRACING AND SHORING.
8. LOCATE AND IDENTIFY ALL EXISTING UTILITIES WITHIN THE CONSTRUCTION AREA. DISCONNECT AND SEAL OR CAP OFF UTILITY SERVICES THAT WILL BE AFFECTED BY THIS PROJECT. NOTIFY AFFECTED UTILITY COMPANIES BEFORE STARTING WORK AND COMPLY WITH THEIR REQUIREMENTS. VERIFY THAT UTILITIES HAVE BEEN DISCONNECTED AND CAPPED.
9. DEMOLISH AND REMOVE COMPONENTS IN AN ORDERLY AND CAREFUL MANNER.
10. PROTECT EXISTING FEATURES THAT ARE NOT TO BE DEMOLISHED.
11. CONDUCT OPERATIONS WITH MINIMUM INTERFERENCE TO PUBLIC OR PRIVATE ACCESSES.
12. MAINTAIN EGRESS AND ACCESS AT ALL TIMES. DO NOT CLOSE OR OBSTRUCT ROADWAYS, OR SIDEWALKS WITHOUT PERMITS. COORDINATE W/ AUTHORITY HAVING JURISDICTION.
13. CEASE OPERATIONS IMMEDIATELY IF ADJACENT STRUCTURES APPEAR TO BE IN DANGER. NOTIFY AUTHORITY HAVING JURISDICTION.
14. ROUGH GRADE AND COMPACT AREAS AFFECTED BY DEMOLITION TO MAINTAIN SITE GRADES AND CONTOURS.
15. FIELD VERIFY EXISTING CONDITIONS AND CORRELATE WITH REQUIREMENTS INDICATED ON DEMOLITION PLAN TO DETERMINE EXTENT OF SELECTIVE DEMOLITION REQUIRED.
16. CONDUCT DEMOLITION OPERATIONS AND REMOVE DEBRIS TO ENSURE MINIMUM INTERFERENCE WITH SELECTIVE DEMOLITION OPERATIONS.
17. CONDUCT DEMOLITION OPERATIONS TO PREVENT INJURY TO PEOPLE AND DAMAGE TO ADJACENT BUILDINGS AND FACILITIES TO REMAIN. ENSURE SAFE PASSAGE OF PEOPLE AROUND SELECTIVE DEMOLITION AREA.
18. USE WATER MIST, TEMPORARY ENCLOSURES AND OTHER SUITABLE METHODS TO LIMIT THE SPREAD OF DUST AND DIRT. COMPLY WITH GOVERNING ENVIRONMENTAL PROTECTION REGULATIONS. DO NOT USE WATER WHEN IT MAY DAMAGE EXISTING CONSTRUCTION, SUCH AS CAUSING FLOODING, AND TRANSPORTING POLLUTANTS.
19. REMOVE AND TRANSPORT DEBRIS IN A MANNER THAT WILL PREVENT SPILLAGE ON ADJACENT SURFACES AND AREAS.
20. CLEAN ADJACENT STRUCTURES AND IMPROVEMENTS OF DUST, DIRT AND DEBRIS CAUSED BY SELECTIVE DEMOLITION OPERATIONS. RETURN ADJACENT AREAS TO CONDITION EXISTING BEFORE START OF SELECTIVE DEMOLITION.
21. PROMPTLY DISPOSE OF DEMOLISHED MATERIALS. ALL DEBRIS RESULTING FROM DEMOLITION ACTIVITIES SHALL BE DISPOSED OF OFF-SITE AT A FACILITY APPROVED TO RECEIVE THE DEBRIS. DO NOT ALLOW DEMOLISHED MATERIALS TO ACCUMULATE ON-SITE. DO NOT BURN DEMOLISHED MATERIALS ON-SITE.
22. NO SITE DISTURBANCE IS TO OCCUR PRIOR TO CLEARING OF SUCH BY THE RETAINED QUALIFIED INSPECTOR.
23. ANY NECESSARY TREE CLEARING WILL OCCUR BETWEEN NOVEMBER 1ST AND MARCH 31ST TO AVOID DIRECT OR INDIRECT TAKE OF THE BAT SPECIES AS DURING THIS TIME THE BATS WOULD BE HIBERNATING AND NOT PRESENT ON SITE.

GRADING PLAN NOTES:

GRADING NOTES:

1. PRIOR TO SITE DISTURBANCE, CONTRACTOR TO INSTALL EROSION & SEDIMENT CONTROL MEASURES.
2. IF ROCK IS ENCOUNTERED DURING CONSTRUCTION & REMOVAL BY BLASTING IS REQUIRED, THE CONTRACTOR SHALL OBTAIN ALL NECESSARY APPROVALS AND PERMITS REQUIRED BY THE AUTHORITY HAVING JURISDICTION.
3. ALL BLASTING OPERATIONS WILL ADHERE TO NEW YORK STATE AND LOCAL AUTHORITY ORDINANCES GOVERNING THE USE OF EXPLOSIVES. THE STATE REGULATIONS ARE CONTAINED IN 12 NYCRR 39 AND INDUSTRIAL CODE RULE 753.
4. STRIP ALL TOPSOIL PRIOR TO COMMENCING EARTHWORK OPERATIONS. TOPSOIL MAY BE STORED AND REUSED IN LAWN AND PLANTING AREAS ONLY. TOPSOIL AND SEED ALL AREAS DISTURBED BY CONSTRUCTION THAT ARE TO REMAIN GREEN.
5. BOX ALL TREES AND HOUSE ALL SHRUBS AND HEDGES BEFORE PLACING EARTH AGAINST OR NEAR THEM. ORNAMENTAL TREES, SHRUBS AND HEDGES WHICH MUST BE REMOVED DURING CONSTRUCTION SHALL BE HEALED IN AND RE-PLANTED IN AS GOOD A CONDITION AS THEY WERE BEFORE THEIR REMOVAL. ANY DAMAGED TREES, SHRUBS, AND/OR HEDGES SHALL BE REPLACED AT THE CONTRACTOR'S EXPENSE.
6. ALL EARTHWORK SHALL BE SMOOTHLY AND EVENLY BLENDED INTO EXISTING CONDITIONS. NO WORK, STORAGE OR TRESPASS SHALL BE PERMITTED BEYOND THE BOUNDARIES OF ANY EASEMENT OR PROPERTY LINE.
7. REMOVE ALL VEGETATION, TREES, STUMPS, GRASSES, ORGANIC SOILS, DEBRIS AND DELETERIOUS MATERIALS WITHIN THE AREAS SLATED FOR CONSTRUCTION.
8. IF PREVIOUSLY UNKNOWN CULTURAL, ARCHEOLOGICAL, OR HISTORIC REMAINS OR ARTIFACTS ARE DISCOVERED IN THE COURSE OF CONSTRUCTION OF THIS PROJECT, THE PROJECT SPONSORS SHALL SUSPEND CONSTRUCTION OPERATIONS IN THE PERTINENT AREA AND SHALL NOTIFY THE PROJECT ENGINEER. CONSTRUCTION IN THAT AREA SHALL RESUME ONLY AFTER COMPLETION OF FEDERAL, TRIBAL, AND STATE COORDINATION TO DETERMINE WHETHER PROTECTION OR RECOVERY OF THE REMAINS IS WARRANTED, OR WHETHER THE SITE IS ELIGIBLE FOR LISTING IN THE NATIONAL REGISTER OF HISTORIC PLACES.

UTILITY PLAN NOTES:

GENERAL CONSTRUCTION NOTES:

1. ALL UNDERGROUND UTILITIES ARE SHOWN IN THEIR RELATIVE POSITION AND ARE FOR INFORMATIONAL PURPOSES ONLY. CONTRACTOR TO VERIFY THEIR ACTUAL LOCATION IN THE FIELD PRIOR TO THE COMMENCEMENT OF CONSTRUCTION.
2. ANY CONDITION ENCOUNTERED IN THE FIELD DIFFERING FROM THOSE SHOWN HEREON, SHALL BE REPORTED TO THE DESIGN ENGINEER BEFORE CONSTRUCTION IS TO PROCEED.
3. SEWER MAINS IN RELATION TO WATER MAINS: WHERE POSSIBLE, SEWERS SHALL BE LAID AT LEAST 10 (TEN) FEET HORIZONTALLY FROM ANY EXISTING OR PROPOSED WATER MAIN. VERTICAL SEPARATION SHALL BE MAINTAINED TO PROVIDE 18 (EIGHTEEN) INCHES BETWEEN TOP OF SEWER AND BOTTOM OF THE WATER MAIN AT UTILITY CROSSINGS. WHEN NOT POSSIBLE TO OBTAIN THE PROPER VERTICAL SEPARATION, SEWER PIPE SHALL BE PRESSURE RATED AND TESTED @ 150psi, 10 (TEN) FEET ON EACH SIDE OF THE WATER MAIN BEING CROSSED.
4. ALL PROPOSED UTILITIES SHALL TERMINATE 5 FEET FROM ANY PROPOSED BUILDING FACE.
5. CONTRACTOR TO COORDINATE WITH BUILDING PLANS FOR ANY CONNECTIONS.
6. ALL STORM SEWER SHALL BE SMOOTH INTERIOR HDPE UNLESS OTHERWISE SPECIFIED.
7. ALL GRAVITY SANITARY SEWER SHALL BE SDR 35 PVC UNLESS OTHERWISE SPECIFIED.
8. ALL WATER PIPE SHALL BE CL52 DUCTILE IRON PIPE UNLESS OTHERWISE SPECIFIED.
9. CONTRACTOR TO VERIFY STATUS OF ALL UTILITY SERVICES PRIOR TO INTERRUPTION.
10. EXPLORATORY EXCAVATIONS SHALL BE PERFORMED BY THE CONTRACTOR AT ALL UTILITY CONNECTION LOCATIONS AND AS NEEDED TO VERIFY EXISTING CONDITIONS PRIOR TO PERFORMING WORK.
11. BEFORE CONSTRUCTING LINES TO CONNECT TO EXISTING UTILITIES, VERIFY EXISTING UTILITY INVERTS AND NOTIFY THE ENGINEER IF ANY VARIATION FROM THE PLAN IS REQUIRED.
12. THE CONTRACTOR SHALL MAINTAIN ALL EXISTING UTILITIES IN SERVICE FOR THE DURATION OF THE WORK.
13. THE CONTRACTOR SHALL COMPLY WITH ALL REQUIRED PERMITS AND ASSOCIATED CONDITIONS.
14. CONTRACTOR SHALL BE RESPONSIBLE FOR DEWATERING UTILITY TRENCHES AND EXCAVATIONS AND FOR THE MAINTENANCE OF SURFACE DRAINAGE DURING THE COURSE OF THE WORK.
15. IF ROCK REMOVAL BY BLASTING IS REQUIRED, THE CONTRACTOR SHALL OBTAIN ALL NECESSARY APPROVALS AND PERMITS REQUIRED BY THE AUTHORITY HAVING JURISDICTION.

GENERAL CONSTRUCTION NOTES:

1. ALL UTILITY WORK INVOLVING CONNECTION TO EXISTING MUNICIPAL WATER MAIN SHALL BE COORDINATED WITH OWNER AND OWNER'S REPRESENTATIVE. NOTIFY OWNER AND THE OWNER'S REPRESENTATIVE 3 WORKING DAYS BEFORE CONNECTION IS MADE.
2. THE CONTRACTOR SHALL VERIFY THE PRESENCE OF AND EXACT LOCATION OF ALL UTILITIES PRIOR TO COMMENCING ANY EXCAVATION WORK AS THE EXACT LOCATION OF UTILITIES MAY DIFFER FROM THE LOCATION SHOWN, AND ADDITIONAL UTILITIES MAY EXIST.
3. THE CONTRACTOR SHALL REVIEW ALL FIELD UTILITY MARKOUT INFORMATION AND BRING ANY CONFLICTS TO THE ATTENTION OF THE PROJECT ENGINEER PRIOR TO COMMENCING ANY WORK OPERATIONS. TEST PITS MAY BE REQUIRED BY THE CONTRACTOR TO VERIFY ACTUAL UTILITY LOCATIONS AND/OR DEPTHS. TEST PIT OPERATIONS WILL MEET ALL NECESSARY REQUIREMENTS AS SET FORTH IN THESE PLANS, DETAILS, FEDERAL/STATE/LOCAL REGULATIONS AND ANY SPECIFIC PERMIT REQUIREMENTS.
4. THE CONTRACTOR SHALL PERFORM EXPLORATORY EXCAVATIONS AT ALL UTILITY CONNECTION LOCATIONS AND AS NEEDED TO VERIFY EXISTING CONDITIONS PRIOR TO PERFORMING WORK. THE CONTRACTOR SHALL NOTIFY THE OWNER AND OWNER'S REPRESENTATIVE 3 WORKING DAYS PRIOR TO SUCH EXCAVATIONS TO ENSURE THEIR PRESENCE.
5. THE CONTRACTOR SHALL EXERCISE CAUTION WHEN EXCAVATING FOR THE PROPOSED STRUCTURES AND WATER LINES AS THE EXACT LOCATION OF UNDERGROUND STRUCTURES AND UTILITIES ARE NOT KNOWN. ANY DAMAGE TO EXISTING STRUCTURES/UTILITIES ABOVE OR BELOW GRADE, CAUSED BY THE CONTRACTOR SHALL BE REPAIRED IMMEDIATELY BY THE CONTRACTOR AT HIS OWN EXPENSE.

SITE PLAN NOTES:

GENERAL CONSTRUCTION NOTES:

1. THE CONTRACTOR SHALL PROTECT EXISTING PROPERTY LINE MONUMENTATION. ANY MONUMENTATION DISTURBED OR DESTROYED, AS JUDGED BY THE ENGINEER OR OWNER, SHALL BE REPLACED AT THE CONTRACTOR'S EXPENSE AND UNDER THE SUPERVISION OF A NEW YORK STATE LICENSED LAND SURVEYOR.
2. ALL PAVEMENT RESTORATION SHALL MEET AND MATCH EXISTING GRADES.
3. ALL SAWCUT LINES SHALL BE PARALLEL AND CURVILINEAR TO EXISTING OR PROPOSED CURBING AND SHALL BE A CONSTANT DISTANCE OF 18" MIN AWAY.
4. ALL ARCHITECTURE IS SUBJECT TO PLANNING BOARD REVIEW.
5. NOTIFY ENGINEER 48 HOURS PRIOR TO INITIALIZATION OF ANY WORK ON SITE.
6. THE ENGINEER SHALL BE NOTIFIED IN WRITING OF ANY CONDITIONS THAT VARY FROM THOSE SHOWN ON THE PLANS. THE CONTRACTOR'S WORK SHALL NOT VARY FROM THE PLANS WITHOUT PRIOR REVIEW FROM THE ENGINEER.
7. CONTRACTOR IS RESPONSIBLE FOR EMPLOYING AND MAINTAINING ALL TRAFFIC CONTROL AND SAFETY MEASURES DURING CONSTRUCTION.
8. CONTRACTOR IS RESPONSIBLE FOR PROPERLY & SAFELY MAINTAINING AREA BETWEEN ALL ADJOINING PROPERTIES.
9. NO WORK, STORAGE OR TRESPASS SHALL BE PERMITTED BEYOND THE SITE PROPERTY LINES OR PUBLIC RIGHT-OF-WAY.
10. ALL EXISTING LAWN AREA, CURBING, PAVING, SIDEWALKS, CULVERTS OR OTHER PUBLIC OR PRIVATE PROPERTY DAMAGED BY TRENCHING OR EXCAVATION OPERATIONS SHALL BE REPAIRED OR REPLACED TO A CONDITION EQUAL TO EXISTING, AS DESCRIBED IN CONTRACT DOCUMENTS OR AS ORDERED BY ENGINEER (ASBE). MAILBOXES, SIGN POSTS, ETC SHALL BE PROTECTED OR REMOVED AND REPLACED EXACTLY AS THEY WERE BEFORE BEING DISTURBED. REMOVE AND REPLACE AFFECTED CURBING AND SIDEWALK TO NEAREST JOINT. REMOVE PAVEMENT AND REPLACE TO SAW CUT LINE. SAW CUT IN STRAIGHT LINE TO POINT NEEDED TO BLEND GRADE, REMOVE LAWN AND REPLACE TO MINIMUM LIMIT OF EXCAVATION.
11. IF PREVIOUSLY UNKNOWN CULTURAL, ARCHEOLOGICAL, OR HISTORIC REMAINS OR ARTIFACTS ARE DISCOVERED IN THE COURSE OF CONSTRUCTION OF THIS PROJECT, THE PROJECT SPONSORS SHALL SUSPEND CONSTRUCTION OPERATIONS IN THE PERTINENT AREA AND SHALL NOTIFY THE PROJECT ENGINEER. CONSTRUCTION IN THAT AREA SHALL RESUME ONLY AFTER COMPLETION OF FEDERAL, TRIBAL, AND STATE COORDINATION TO DETERMINE WHETHER PROTECTION OR RECOVERY OF THE REMAINS IS WARRANTED, OR WHETHER THE SITE IS ELIGIBLE FOR LISTING IN THE NATIONAL REGISTER OF HISTORIC PLACES.

LAYOUT NOTES:

1. BUILDING DIMENSIONS TO BE TAKEN FROM ARCHITECTURAL BUILDING PLANS. NOTIFY THE ENGINEER OF ANY DEVIATION FROM CONDITIONS SHOWN ON THIS PLAN.
2. THE CONTRACTOR SHALL BE RESPONSIBLE FOR COORDINATING ALL FIELD LAYOUT. THE CONTRACTOR SHALL TAKE TIES TO ALL UTILITY CONNECTIONS AND PROVIDE MARKED-UP AS BUILT PLANS FOR ALL UTILITIES SHOWING TIES TO CONNECTIONS, BENDS, VALVES, LENGTHS OF LINES AND INVERTS. AS-BUILT PLANS SHALL BE REVIEWED BY THE OWNER AND THE ENGINEER AND THE CONTRACTOR SHALL PROVIDE ANY CORRECTION OR ADDITIONS TO THE SATISFACTION OF THE OWNER AND THE ENGINEER BEFORE UTILITIES WILL BE ACCEPTED.

PAVING NOTES:

1. NO VEHICULAR TRAFFIC OF ANY SORT SHALL BE PERMITTED ON THE SURFACE OF SUBBASE COURSE MATERIAL ONCE IT HAS BEEN FINE GRADED, COMPACTED, AND IS READY FOR PAVING. SUBBASE MATERIAL SO PREPARED FOR PAVING SHALL BE PAVED WITHIN THREE DAYS OF PREPARATION.
2. SUBBASE MATERIAL AND THE VARIOUS ASPHALT CONCRETE MATERIALS CALLED FOR IN THESE DRAWINGS SHALL CONFORM WITH THE REFERENCED SECTION OF THE NEW YORK STATE DEPARTMENT OF TRANSPORTATION STANDARD SPECIFICATIONS FOR CONSTRUCTION AND MATERIALS, DATED **"LATEST EDITIONS"**. CONSTRUCTION SHALL BE AS FURTHER SET FORTH IN THOSE SPECIFICATIONS AND AS OTHERWISE PROVIDED FOR IN THESE DRAWINGS.
3. PLACE ASPHALT CONCRETE MIXTURE ON PREPARED SURFACE, SPREAD AND STRIKE-OFF USING A SELF-PROPELLED PAVING MACHINE, WITH VIBRATING SCREED. PLACEMENT IN INACCESSIBLE AND SMALL AREAS MAY BE BY HAND.
4. PROVIDE JOINTS BETWEEN OLD AND NEW PAVEMENTS OR BETWEEN SUCCESSIVE DAY'S WORK.
5. TACK COAT WHEN SPECIFIED OR CALLED OUT ON THE DRAWINGS OR REQUIRED BY THE REFERENCED SPECIFICATION SHALL CONFORM WITH THE FOLLOWING:
   - A. TACK COAT SHALL MEET THE MATERIAL REQUIREMENTS OF 702-90 ASPHALT EMULSION FOR TACK COAT OF THE NEW YORK STATE DEPARTMENT OF TRANSPORTATION STANDARD SPECIFICATIONS FOR CONSTRUCTION AND MATERIALS, DATED **"LATEST EDITION"**, SHALL BE APPLIED IN ACCORDANCE WITH SECTION 407 - TACK COAT SHALL BE IN ACCORDANCE WITH THOSE SPECIFICATIONS AND AS OTHERWISE PROVIDED FOR IN THESE DRAWINGS.
   - B. REMOVE LOOSE AND FOREIGN MATERIAL FROM ASPHALT SURFACE BEFORE PAVING NEXT COURSE. USE POWER BROOMS, BLOWERS OR HAND BROOM.
   - C. APPLY TACK COAT TO ASPHALT PAVEMENT SURFACES & AND SURFACES OF CURBS, GUTTERS, MANHOLES, AND OTHER STRUCTURES PROJECTING INTO OR ABUTTING PAVEMENT. DRY TO A "TACKY" CONSISTENCY BEFORE PAVING.
   - D. TACK COAT ENTIRE VERTICAL SURFACE OF ABUTTING EXISTING PAVEMENT.
6. AFTER COMPLETION OF PAVING AND SURFACING OPERATIONS, CLEAN SURFACES OF EXCESS OR SPILLED ASPHALT, GRAVEL OR STONE MATERIALS TO THE SATISFACTION OF THE ENGINEER.

TESTING WATER MAINS:

1. AFTER TRENCH HAS BEEN BACKFILLED, HYDROSTATIC ACCEPTANCE TESTS, CONSISTING OF A PRESSURE TEST AND A LEAKAGE TEST, SHALL BE PERFORMED ON ALL SECTIONS OF WATER MAINS INSTALLED. LEAKAGE TEST SHALL BE CONDUCTED CONCURRENTLY WITH PRESSURE TEST. TEST SECTION SHALL BE LIMITED TO ABOUT 2000 FT (MAX.) UNLESS OTHERWISE APPROVED BY THE ENGINEER.
2. AFTER ALL TESTS AND INSPECTIONS HAVE BEEN PERFORMED EVIDENCE OF COMPLIANCE SHALL BE FORWARDED TO OWNER/ENGINEER AND THE MUNICIPALITY PRIOR TO ACCEPTANCE.
3. ALL WATER FOR TESTS SHALL BE FURNISHED AND DISPOSED OF BY THE CONTRACTOR AT THE CONTRACTOR'S EXPENSE. SOURCE AND/OR QUALITY OF WATER WHICH THE CONTRACTOR PROPOSES TO USE IN TESTING LINES SHALL BE ACCEPTABLE TO THE ENGINEER.
4. HYDROSTATIC PRESUMPTIVE TESTS MAY BE PERFORMED WHEN SYSTEM IS PARTIALLY BACKFILLED TO SIMPLY CHECK WORK, BUT ACCEPTANCE OF SYSTEM SHALL BE BASED ON HYDROSTATIC TESTS RUN ON FINISHED SYSTEM AFTER IT HAS BEEN COMPLETELY BACKFILLED. ALL HYDROSTATIC TESTS SHALL BE PERFORMED IN ACCORDANCE WITH SECTION 4 OF AWWA STANDARD C 600 OR LATER ADDITION, AS MODIFIED HEREIN.
5. FOR THE PRESSURE TEST, SYSTEM SHALL BE PRESSURIZED AND MAINTAINED AT A MINIMUM OF 150 POUNDS PER SQUARE INCH, OR 1.5 TIMES THE WORKING PRESSURE, WHICHEVER IS GREATER, BASED ON THE ELEVATION OF THE LOWEST POINT IN THE SECTION BEING TESTED AND CORRECTED TO THE ELEVATION OF THE GAUGE. PROVISIONS SHALL BE MADE TO RELIEVE AIR TRAPPED AT HIGH POINTS IN THE SYSTEM THROUGH ADJACENT HYDRANTS OR THROUGH TAPS AND CORPORATION STOPS INSTALLED FOR THIS PURPOSE BY THE CONTRACTOR. AFTER SAID PRESSURE HAS BEEN MAINTAINED SUCCESSFULLY, WITH FURTHER PUMPING AS REQUIRED, FOR A PERIOD OF AT LEAST TWO HOURS, THE SECTION UNDER TEST SHALL BE CONSIDERED TO HAVE PASSED THE PRESSURE TEST.
6. LEAKAGE TEST SHALL BE PERFORMED CONCURRENTLY USING A MINIMUM TEST PRESSURE OF 150 LBS/SQUARE INCH, OR 1.5 TIMES THE WORKING PRESSURE, WHICHEVER IS GREATER, BASED ON THE ELEVATION OF THE LOWEST POINT IN THE SECTION UNDER TEST AND CORRECTED TO ELEVATION OF THE GAUGE. LEAKAGE TEST DURATION SHALL BE A MINIMUM OF 2 HOURS AFTER LEAKAGE RATE HAS STABILIZED.
7. MAXIMUM ALLOWABLE LEAKAGE SHALL BE AS SHOWN IN THE FOLLOWING TABLE: ALLOWABLE LEAKAGE PER 1000 FT (305M) OF PIPELINE (GPH)

AVG. TEST PRESSURE PSI	NOMINAL PIPE DIAMETER-IN. 4	6	8	10	12	14	16
450	0.57	0.86	1.15	1.43	1.72	2.01	2.29
400	0.54	0.81	1.08	1.35	1.62	1.89	2.16
350	0.51	0.76	1.01	1.26	1.52	1.77	2.02
300	0.47	0.70	0.94	1.17	1.40	1.64	1.87
275	0.45	0.67	0.90	1.12	1.34	1.57	1.79
250	0.43	0.64	0.85	1.07	1.28	1.50	1.71
225	0.41	0.61	0.81	1.01	1.22	1.42	1.62
200	0.38	0.57	0.76	0.96	1.15	1.34	1.53
175	0.36	0.54	0.72	0.89	1.07	1.25	1.43
150	0.33	0.50	0.66	0.83	0.99	1.16	1.32
125	0.30	0.45	0.60	0.76	0.91	1.06	1.21
100	0.27	0.41	0.54	0.68	0.81	0.95	1.08

8. IF LEAKAGE IN SYSTEM EXCEEDS THE SPECIFIED AMOUNT, THE CONTRACTOR SHALL, AT NO ADDED COST TO THE OWNER, LOCATE, REPAIR, AND/OR REPLACE DEFECT(S) AND RE-TEST PIPING SYSTEM.

MANHOLES AND OTHER BELOW GRADE STRUCTURES:

1. STRUCTURAL DESIGN FOR MANHOLES AND OTHER BELOW-GRADE PRECAST CONCRETE STRUCTURES:
   - A. NON-TRAFFIC LOADS: BELOW GRADE PRECAST CONCRETE STRUCTURES SHALL BE DESIGNED TO WITHSTAND LOADS IMPOSED BY STRUCTURE WEIGHT, EARTH COVER, LATERAL PRESSURE FROM EARTH AND GROUND WATER, AND LIVE LOADS SUCH AS PEDESTRIAN TRAFFIC OR MACHINERY ON OR ABOVE THE STRUCTURE; AND
   - B. TRAFFIC LOADS: BELOW GRADE PRECAST CONCRETE STRUCTURES SHALL BE DESIGNED TO ALSO WITHSTAND TRAFFIC LOADS CREATED BY AN HS20-44 TRUCK PLUS 25% IMPACT AS DEFINED IN THE LATEST EDITION OF THE AMERICAN ASSOCIATION OF STATE HIGHWAY AND TRANSPORTATION OFFICIALS (AASHTO) DESIGN STANDARDS.
2. MATERIAL WHICH SHALL BE UTILIZED IN THE CONSTRUCTION OF PRECAST CONCRETE STRUCTURES:
   - CEMENT: ASTM C-150, TYPES I,II,III,VI
   - SAND: NYSDOT STD. SPEC. SECTION NO. 703-0 CONCRETE SAND
   - STONE: NYSDOT STD. SPEC. SECTION NO. 703-02 COARSE AGGREGATE
   - STEEL BAR REINFORCEMENT: ASTM A615, GRADE 60
   - WIRE MESH REINFORCEMENT: ASTM A185 PLAIN
   - CONCRETE STRENGTH (28 DAY): 4,500 PSI (F'C)
   - ENTRAINED AIR: 5% MIN.
3. ALL CASTINGS (FRAMES AND COVERS, FRAMES AND GRATES, ETC.) FOR USE IN CONJUNCTION WITH MANHOLES AND OTHER BELOW GRADE STRUCTURES SHALL BE MANUFACTURED FROM GRAY IRON OR DUCTILE IRON. GRAY IRON SHALL CONFORM WITH ASTM A 48, CLASS 30B AND DUCTILE IRON SHALL CONFORM WITH ASTM A 536 AND BE OF A GRADE APPROPRIATE TO ITS INTENDED USE.
4. ALL CASTINGS (FRAMES AND COVERS, FRAMES AND GRATES, ETC.) FOR USE IN CONJUNCTION WITH MANHOLES AND OTHER BELOW GRADE STRUCTURES SHALL BE DESIGNED TO WITHSTAND AASHTO HS 20-44 HIGHWAY LOADING PLUS 25% IMPACT.
5. ALL ASTM REFERENCES SHALL BE FOR THE LATEST ACTIVE STANDARD.
6. THE GREASE TRAPS SHALL BE INSPECTED MONTHLY, PUMPED-OUT AS NECCESSARY, AND A LOG KEPT. TANKS SHOULD BE PUMPED WHEN THE BOTTOM OF THE SCUM LAYER IS WITHIN 3" OF THE BOTTOM OF THE OUTLET BAFFLE OR TEE, OR WHEN THE SLUDGE LEVEL IS WITHIN 8" OF THE OUTLET DEVICE.

WATER MAIN NOTES:

1. ALL WATER MAINS SHALL BE CEMENT LINED DUCTILE IRON PIPE, CLASS 52 PUSH-ON JOINT, UNLESS OTHERWISE SPECIFIED BY OR APPROVED BY THE WATER DEPARTMENT. JOINING SHALL EMPLOY "MEGALUG" CONNECTIONS, FIELD LOCK GASKET, OR AS ALTERNATIVELY SPECIFIED BY THE WATER DEPARTMENT. ALL WATER PIPING CONSTRUCTION SHALL BE TO THE SPECIFICATIONS OF THE WATER DEPARTMENT. WET TAP OF PUBLIC WATER SYSTEM SHALL BE APPROVED AND SUPERVISED BY THE WATER DEPARTMENT. TAPPING SLEEVE SHALL BE STAINLESS STEEL OR APPROVED EQUAL. ALL MAINLINE VALVES SHALL BE RESILIENT WEDGE OR APPROVED EQUAL.
2. THE WATER LINE MAY BE FLEXED WITHIN PIPE SPECIFICATIONS OR LAID DEEPER IN AREAS WHERE A CROSSING WITH A SANITARY LINE OCCURS, TO ACHIEVE THE REQUIRED 1.5' VERTICAL SEPARATION DISTANCE. IF THIS DISTANCE CANNOT BE REASONABLY ACHIEVED, THE CONTRACTOR SHALL USE PRESSURE RATED SANITARY SEWER PIPE OF EQUAL OR GREATER RATEING THAT THE PRESSURE CLASS FOR THE WATER LINE.
3. MINIMUM VERTICAL SEPARATION BETWEEN WATER MAINS AND SEWER PIPE SHALL BE 18 INCHES MEASURED FROM THE OUTSIDE OF THE PIPES AT THE POINT OF CROSSING. ONE FULL STANDARD LAYING LENGTH OF WATER MAIN SHALL BE CENTERED UNDER OR OVER THE SEWER SO THAT BOTH JOINTS WILL BE AS FAR FROM THE SEWER LINE AS POSSIBLE. IN ADDITION, WHEN THE WATER MAIN PASSES UNDER A SEWER, ADEQUATE STRUCTURAL SUPPORT (COMPACTED SELECT FILL) SHALL BE PROVIDED FOR THE SEWER TO PREVENT EXCESSIVE DEFLECTION OF JOINTS AND SETTLING OF THE SEWER PIPE ON THE WATER MAIN. MINIMUM HORIZONTAL SEPARATION BETWEEN PARALLEL WATER MAINS AND SEWER PIPES (INCLUDING MANHOLES AND VAULTS) SHALL BE 10 FEET MEASURED FROM THE OUTSIDE OF THE PIPES, MANHOLES OR VAULTS.
4. ALL WATER MAINS SHALL HAVE A MINIMUM OF (5) FIVE FEET OF COVER FROM THE TOP OF THE MAIN TO FINISHED GRADE. THE CONTRACTOR SHALL CHECK ALL FINISHED GRADE STAKES BEFORE TRENCHING TO ENSURE THAT ALL INSTALLED WATERMAINS WILL HAVE THE REQUIRED COVER.
5. THE SUPPLIER OF WATER MUST RECEIVE AT LEA

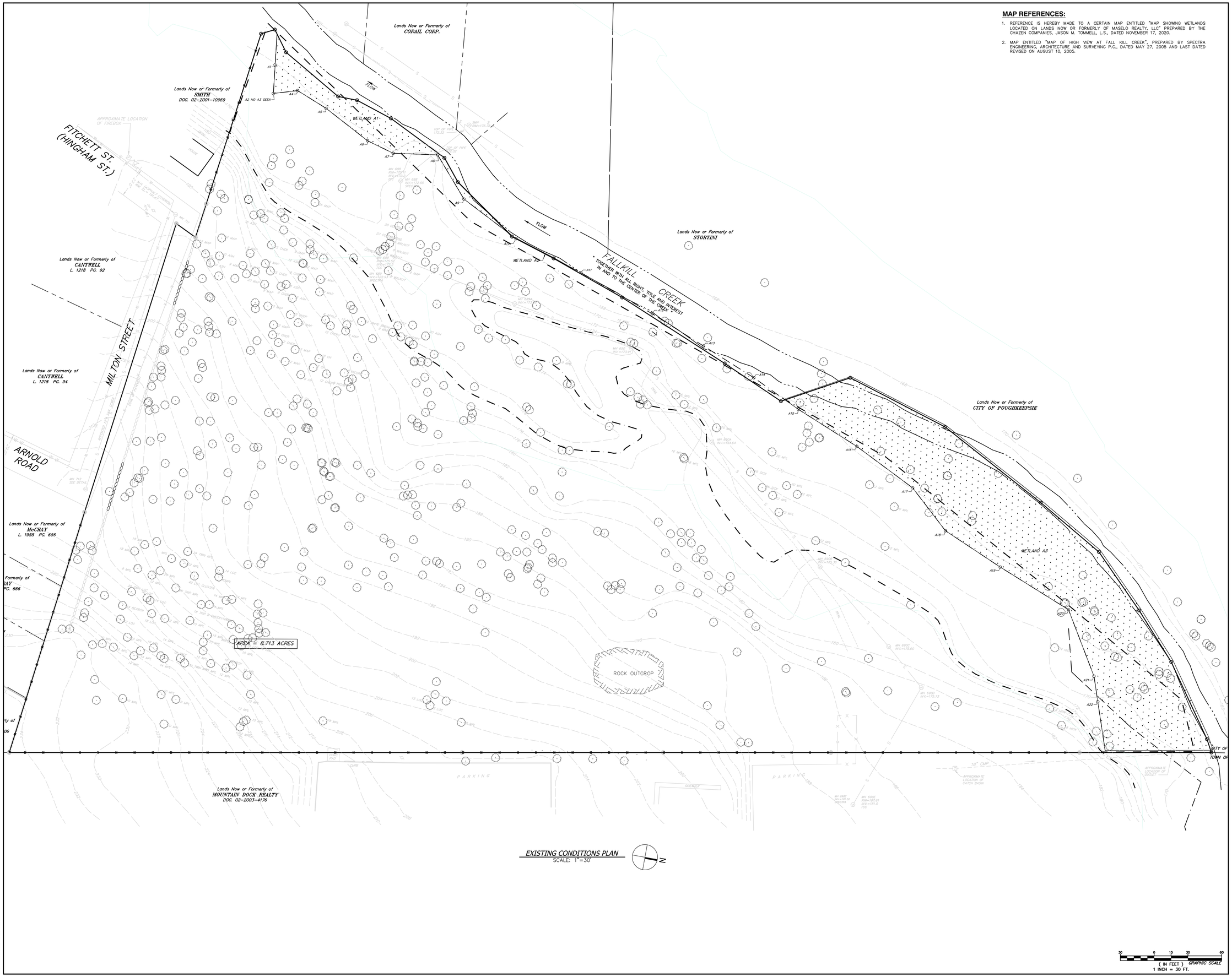

EXISTING CONDITIONS PLAN
SCALE: 1"=30'

MAP REFERENCES:

1. REFERENCE IS HEREBY MADE TO A CERTAIN MAP ENTITLED "MAP SHOWING WETLANDS LOCATED ON LANDS NOW OR FORMERLY OF MASELO REALTY, LLC" PREPARED BY THE CHAZEN COMPANIES, JASON M. TOMMELL, L.S., DATED NOVEMBER 17, 2020.
2. MAP ENTITLED "MAP OF HIGH VIEW AT FALL KILL CREEK", PREPARED BY SPECTRA ENGINEERING, ARCHITECTURE AND SURVEYING P.C., DATED MAY 27, 2005 AND LAST DATED REVISED ON AUGUST 10, 2005.

(IN FEET) GRAPHIC SCALE
1 INCH = 30 FT.

LaBella
Powered by partnership.

21 Fox Street
Poughkeepsie, NY 12601
845-454-3980

labellapc.com

NOT FOR CONSTRUCTION

EXP: ##/##/20## EXP: ##/##/20##

CERTIFICATE OF AUTHORIZATION NUMBER:
PROFESSIONAL ENGINEERING: 0021272
LAND SURVEYING: 0021271
GEOLOGICAL: 0021659

It is a violation of New York Education Law Art. 145 Sec. 7209 & Art. 147 Sec. 7307, for any person, unless acting under the direction of a licensed architect, professional engineer, or land surveyor, to alter an item in any way. If an item bearing the seal of an architect, engineer, or land surveyor is altered; the altering architect, engineer, or land surveyor shall affix to the item their seal and notation "altered by" followed by their signature and date of such alteration, and a specific description of the alteration.

© 2025 LaBella Associates

MASELO REALTY LLC
18 EASTVIEW ROAD
MONSEY, NY 10952

HIGHVIEW AT THE FALLKILL CREEK
CITY OF POUGHKEEPSIE
DUTCHESS COUNTY, NEW YORK

NO:	DATE:	DESCRIPTION:
Revisions		

PROJECT NUMBER: CZ81947.00

DRAWN BY: JRR

REVIEWED BY: KGA

ISSUED FOR: PLANNING BOARD REVIEW

DATE: 10/28/2025

DRAWING NAME:

EXISTING CONDITIONS PLAN

DRAWING NUMBER:

C100

Drawing Name: B:\GLOBAL\Legacy\Chazen\Projects\81900\81999\81947.00 - Highview II\DWG\01_C100_EXISTING CONDITIONS PLAN.dwg
Xref's Attached: XBASE-ENG_81947, XBASE-ENG-WETLAND_81947-00, XBORDER_81947-00_30x42
Date Printed: Oct 27, 2025, 4:23pm

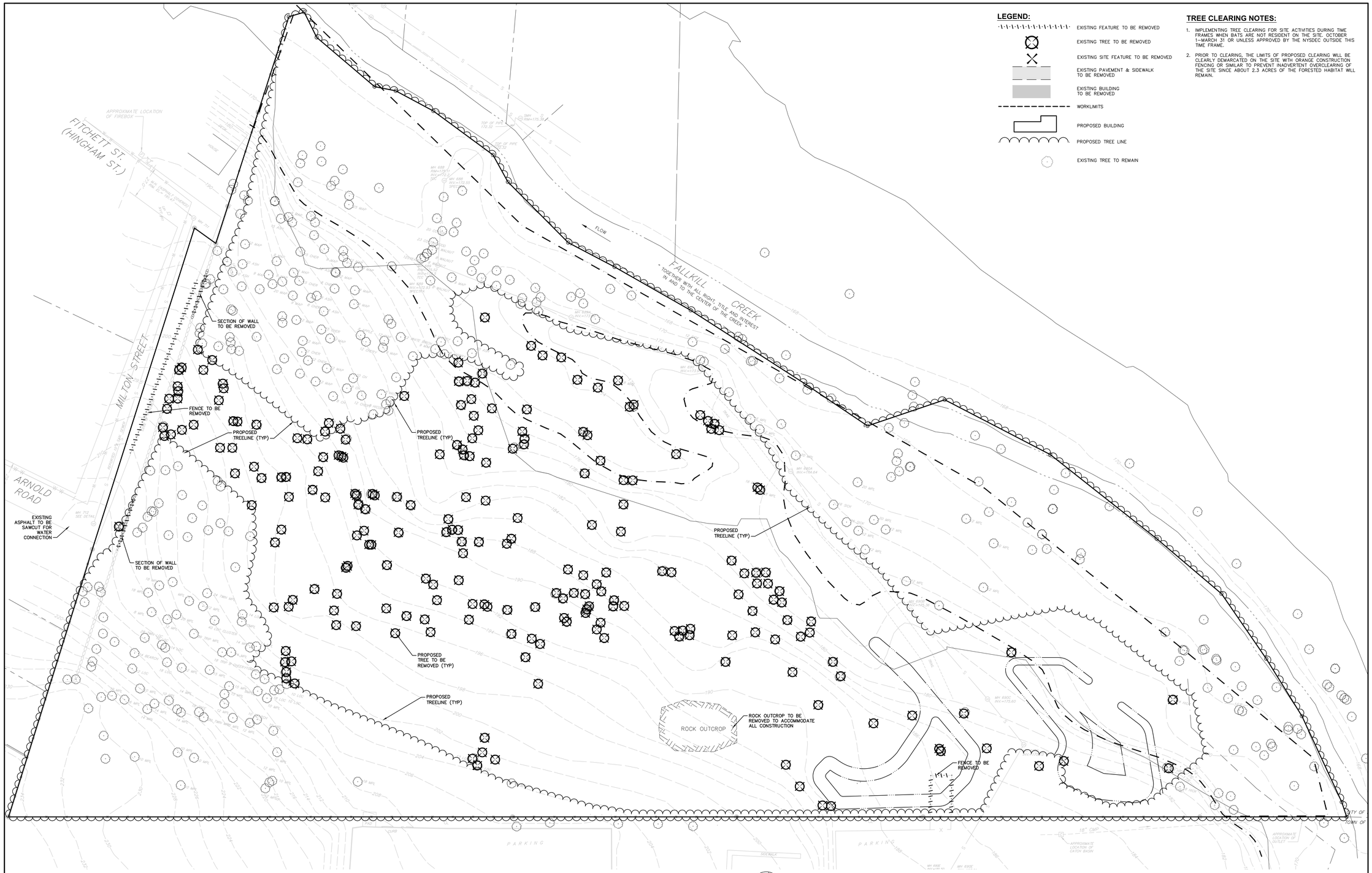

DEMOLITION & TREE REMOVALS PLAN
SCALE: 1"=30'

30 0 15 30 60
(IN FEET) GRAPHIC SCALE
1 INCH = 30 FT.

EXISTING TREES

SPECIES	8"	9"	10"	12"	13"	14"	15"	16"	18"	20"	22"	23"	24"	25"	28"	30"	36"	40"	TOTAL
APPLE	2	0	0	0	0	0	0	0	0	0	0	0	0	0	0	0	0	0	2
ASH	6	0	3	19	0	0	1	0	0	5	1	0	0	0	0	0	0	0	35
BIRCH	0	0	2	2	0	2	1	1	3	0	0	0	0	0	0	0	0	0	11
CHERRY	8	0	7	12	1	0	5	0	1	0	0	0	0	0	0	0	0	0	34
CHESTNUT	0	0	0	0	1	0	0	0	0	0	0	0	0	0	0	0	0	0	1
COTTONWOOD	1	0	2	1	0	0	0	0	3	0	1	3	0	0	0	0	0	0	11
HICKORY	11	1	5	27	0	0	8	0	9	11	0	0	6	0	0	0	0	0	78
LOCUST	2	0	8	11	2	7	1	1	5	5	0	0	6	0	1	0	1	1	51
MAPLE	31	30	44	81	0	20	14	8	29	17	3	0	10	1	0	2	1	0	291
OAK	0	0	1	0	0	0	1	0	1	0	0	0	0	0	0	0	0	0	3
POPLAR	0	0	0	1	0	0	2	0	0	1	0	0	0	0	0	0	0	0	4
SYCAMORE	0	0	0	15	0	0	0	3	0	5	0	0	0	0	0	0	0	0	23
WALNUT	5	0	0	1	0	0	0	0	0	0	0	0	0	0	0	0	0	0	6
WILLOW	0	0	0	1	0	0	0	0	0	1	0	0	0	0	0	0	0	0	2
																			552

TREES TO BE REMOVED

SPECIES	8"	9"	10"	12"	13"	14"	15"	16"	18"	20"	22"	23"	24"	25"	28"	30"	36"	40"	TOTAL
APPLE	0	0	0	0	0	0	0	0	0	0	0	0	0	0	0	0	0	0	0
ASH	4	0	0	1	0	0	0	0	0	1	0	0	0	0	0	0	0	0	6
BIRCH	0	0	1	0	0	0	0	1	0	0	0	0	0	0	0	0	0	0	2
CHERRY	5	0	7	2	1	0	2	0	0	0	0	0	0	0	0	0	0	0	17
CHESTNUT	0	0	0	0	0	0	0	0	0	0	0	0	0	0	0	0	0	0	0
COTTONWOOD	1	0	0	0	0	0	0	0	0	0	0	0	2	0	0	0	0	0	3
HICKORY	4	0	1	10	0	0	0	0	1	1	0	0	3	0	0	0	0	0	20
LOCUST	1	0	4	7	1	3	0	0	1	6	0	0	3	0	0	0	0	0	26
MAPLE	16	5	13	29	0	11	3	1	18	1	0	0	4	0	0	0	0	0	101
OAK	0	0	1	0	0	0	0	0	0	0	0	0	0	0	0	0	0	0	1
POPLAR	0	0	0	1	0	0	2	0	0	0	0	0	0	0	0	0	0	0	3
SYCAMORE	0	0	0	0	0	0	0	0	0	0	0	0	0	0	0	0	0	0	0
WALNUT	0	0	0	0	0	0	0	0	0	0	0	0	0	0	0	0	0	0	0
WILLOW	0	0	0	0	0	0	0	0	0	0	0	0	0	0	0	0	0	0	0
																			179

TREES TO BE PRESERVED

SPECIES	8"	9"	10"	12"	13"	14"	15"	16"	18"	20"	22"	23"	24"	25"	28"	30"	36"	40"	TOTAL
APPLE	2	0	0	0	0	0	0	0	0	0	0	0	0	0	0	0	0	0	2
ASH	2	0	3	18	0	0	1	0	0	5	1	0	0	0	0	0	0	0	30
BIRCH	0	0	1	2	0	2	1	0	3	0	0	0	0	0	0	0	0	0	9
CHERRY	3	0	0	10	1	0	3	0	1	0	0	0	0	0	0	0	0	0	18
CHESTNUT	0	0	0	0	1	0	0	0	0	0	0	0	0	0	0	0	0	0	1
COTTONWOOD	0	0	2	1	0	0	0	0	0	3	0	1	1	0	0	0	0	0	8
HICKORY	7	1	4	17	0	0	8	0	8	10	0	0	3	0	0	0	0	0	58
LOCUST	1	0	4	4	1	4	1	1	4	0	0	0	3	0	1	0	1	1	26
MAPLE	15	25	31	52	0	9	11	7	11	16	3	0	6	1	0	2	1	0	190
OAK	0	0	0	0	0	0	1	0	1	0	0	0	0	0	0	0	0	0	2
POPLAR	0	0	0	1	0	0	0	0	0	0	0	0	0	0	0	0	0	0	1
SYCAMORE	0	0	0	15	0	0	0	3	0	5	0	0	0	0	0	0	0	0	23
WALNUT	5	0	0	1	0	0	0	0	0	0	0	0	0	0	0	0	0	0	6
WILLOW	0	0	0	1	0	0	0	0	0	1	0	0	0	0	0	0	0	0	2
																			376

LaBella
Powered by partnership.
21 Fox Street
Poughkeepsie, NY 12601
845-454-3980
labellapc.com

NOT FOR CONSTRUCTION
EXP: ##/##/20##
EXP: ##/##/20##

CERTIFICATE OF AUTHORIZATION NUMBER:
PROFESSIONAL ENGINEERING: 0021272
LAND SURVEYING: 0021271
GEOLOGICAL: 0021659

It is a violation of New York Education Law Art. 145 Sec. 7209 & Art. 147 Sec. 7307, for any person, unless acting under the direction of a licensed architect, professional engineer, or land surveyor, to alter an item in any way. If an item bearing the seal of an architect, engineer, or land surveyor is altered; the altering architect, engineer, or land surveyor shall affix to the item their seal and notation "altered by" followed by their signature and date of such alteration, and a specific description of the alteration.

© 2025 LaBella Associates

MASELO REALTY LLC
18 EASTVIEW ROAD
MONSEY, NY 10952

HIGHVIEW AT THE FALLKILL CREEK
CITY OF POUGHKEEPSIE
DUTCHESS COUNTY, NEW YORK

NO:	DATE:	DESCRIPTION:
Revisions		

PROJECT NUMBER: CZ81947.00
DRAWN BY: JRR
REVIEWED BY: KGA
ISSUED FOR: PLANNING BOARD REVIEW
DATE: 10/28/2025
DRAWING NAME:

DEMOLITION & TREE REMOVALS PLAN

DRAWING NUMBER:

C120

Drawing Name: B:\GLOBAL\Legacy\Chazen\Projects\81900-81999\81947.00 - Highview III\DWG\01_C120_81947_DEMO&TREE REMOVAL PLAN.dwg
Xref's Attached: 35X36_ENG_81947, ALAN'OUT_81947, X-BDRDER_81947-A0_36x42
Date Printed: 10/27/2025 - 10:42pm

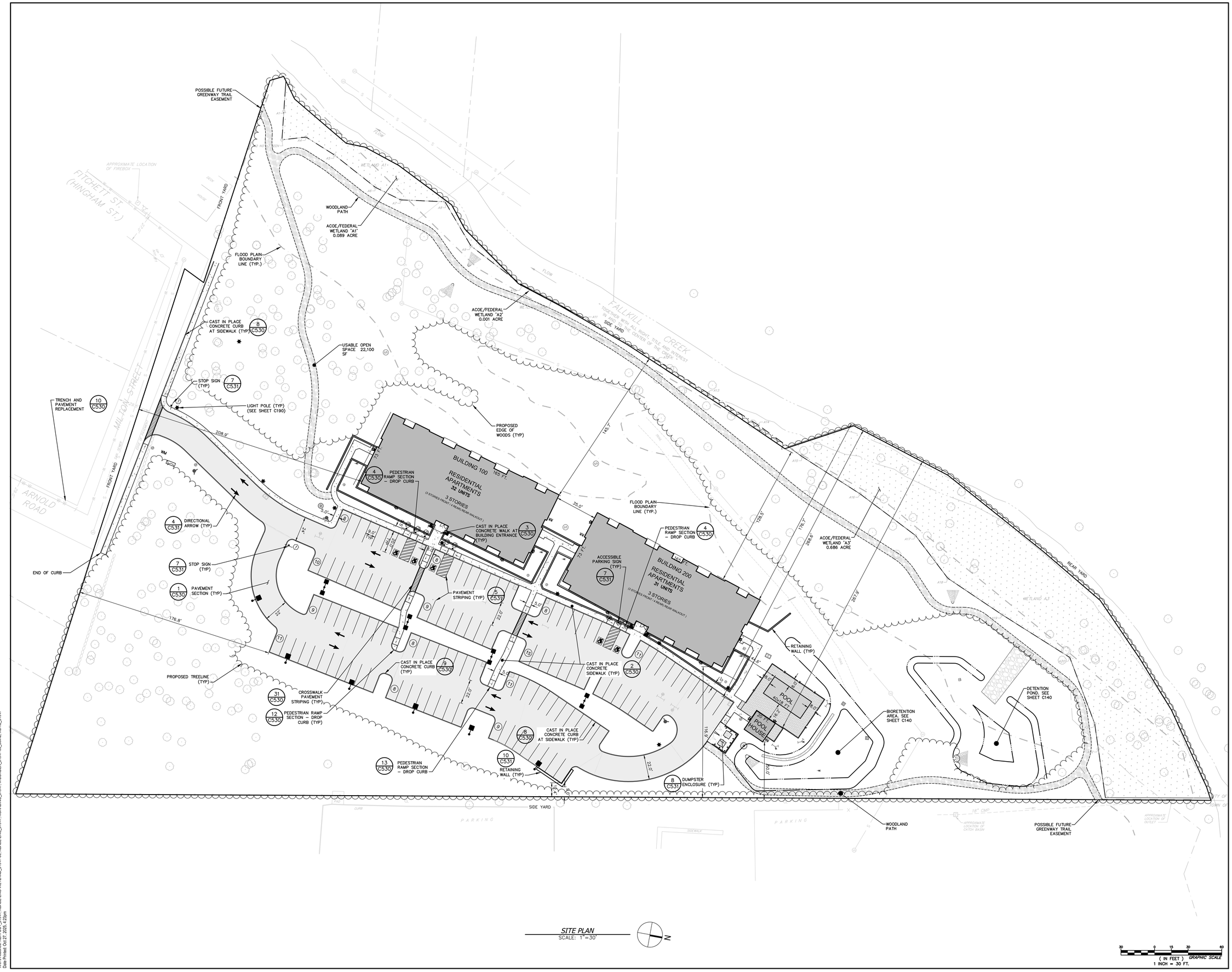

SITE PLAN
SCALE: 1"=30'

(IN FEET) GRAPHIC SCALE
1 INCH = 30 FT.

LaBella
Powered by partnership.

21 Fox Street
Poughkeepsie, NY 12601
845-454-3980

labellapc.com

NOT FOR CONSTRUCTION

EXP. ##/##/20## EXP. ##/##/20##

CERTIFICATE OF AUTHORIZATION NUMBER:
PROFESSIONAL ENGINEERING: 0021272
LAND SURVEYING: 0021271
GEOLOGICAL: 0021659

It is a violation of New York Education Law Art. 145 Sec. 7209 & Art. 147 Sec. 7307, for any person, unless acting under the direction of a licensed architect, professional engineer, or land surveyor, to alter an item in any way. If an item bearing the seal of an architect, engineer, or land surveyor is altered; the altering architect, engineer, or land surveyor shall affix to the item their seal and notation "altered by" followed by their signature and date of such alteration, and a specific description of the alteration.

© 2025 LaBella Associates

MASELO REALTY LLC
18 EASTVIEW ROAD
MONSEY, NY 10952

HIGHVIEW AT THE FALLKILL CREEK
CITY OF POUGHKEEPSIE
DUTCHESS COUNTY, NEW YORK

NO:	DATE:	DESCRIPTION:
Revisions		

PROJECT NUMBER: CZ81947.00
DRAWN BY: JRR
REVIEWED BY: KGA
ISSUED FOR: PLANNING BOARD REVIEW
DATE: 10/28/2025
DRAWING NAME:

SITE PLAN

DRAWING NUMBER:

C130

Drawing Name: B:\GLOBAL\Legacy\Chazen\Projects\81900-81999\81947.00 - Highview II\DWG\01_C130_SITE PLAN_81947-00.dwg
Xref's Attached: XLAYOUT_81947; XBASE-ENG-WETLAND_81947-00; XBASE-ENG_81947; XGRADING_81947; X-BORDER_81947-00_30x42; XUTIL_81947
Date Printed: Oct 27, 2025, 4:23pm

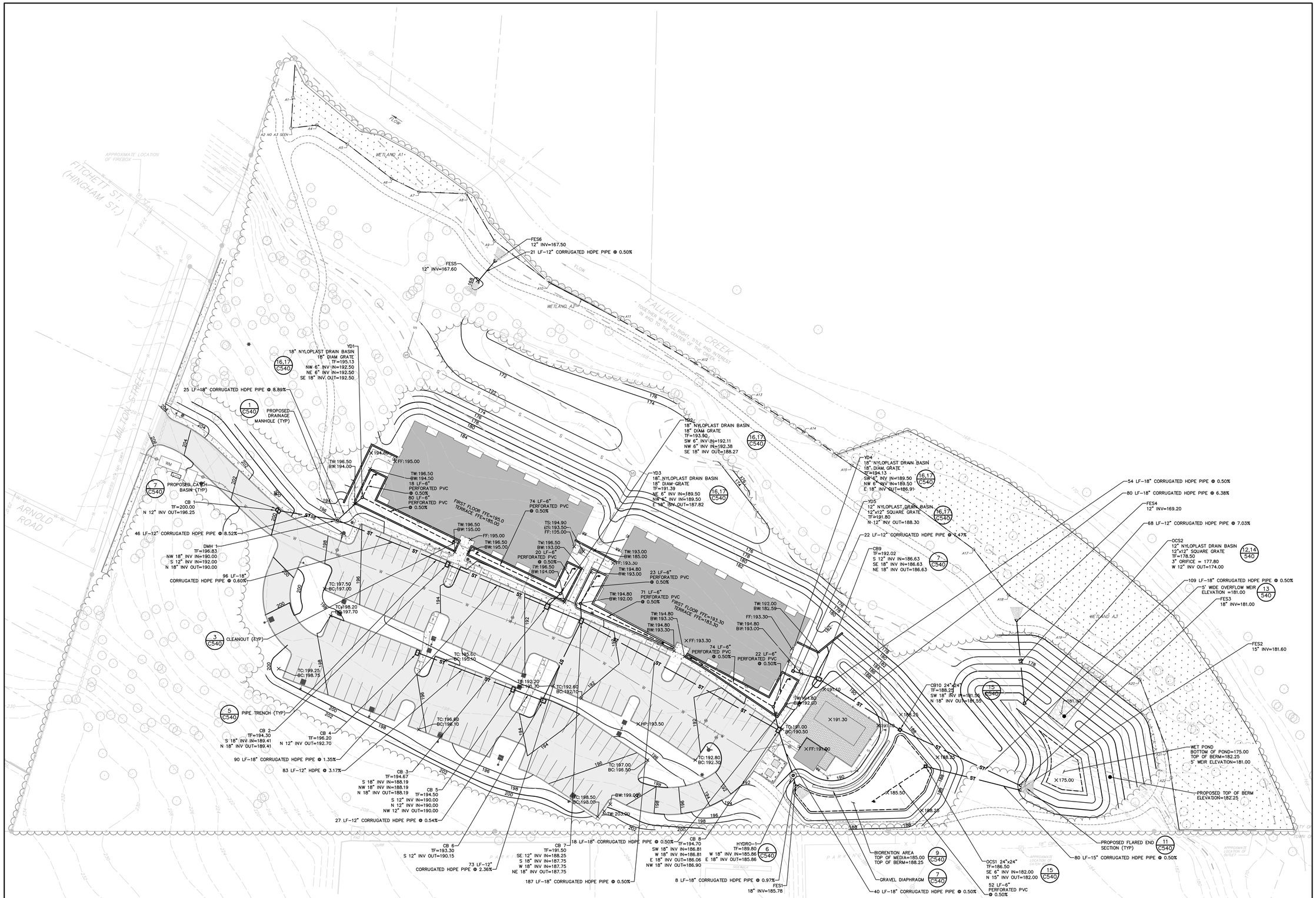

GRADING PLAN
SCALE: 1"=30'

N

30 0 15 30 60
(IN FEET) GRAPHIC SCALE
1 INCH = 30 FT.

LaBella
Powered by partnership.

21 Fox Street
Poughkeepsie, NY 12601
845-454-3980

labellapc.com

NOT FOR CONSTRUCTION
EXP: ##/##/20## EXP: ##/##/20##

CERTIFICATE OF AUTHORIZATION NUMBER:
PROFESSIONAL ENGINEERING: 0021272
LAND SURVEYING: 0021271
GEOLOGICAL: 0021659

It is a violation of New York Education Law Art. 145 Sec. 7209 & Art. 147 Sec. 7307, for any person, unless acting under the direction of a licensed architect, professional engineer, or land surveyor, to alter an item in any way, if an item bearing the seal of an architect, engineer, or land surveyor is altered; the altering architect, engineer, or land surveyor shall affix to the item their seal and notation "altered by" followed by their signature and date of such alteration, and a specific description of the alteration.

© 2025 LaBella Associates

MASELO REALTY LLC
18 EASTVIEW ROAD
MONSEY, NY 10952

HIGHVIEW AT THE FALLKILL CREEK
CITY OF POUGHKEEPSIE
DUTCHESS COUNTY, NEW YORK

NO:	DATE:	DESCRIPTION:
Revisions		

PROJECT NUMBER: CZ81947.00
DRAWN BY: JRR
REVIEWED BY: KGA
ISSUED FOR: PLANNING BOARD REVIEW
DATE: 10/28/2025
DRAWING NAME:

GRADING & DRAINAGE PLAN

DRAWING NUMBER:

C140

Drawing Name: B:\GLOBAL\Legacy\Chazen\Projects\81900-81999\81947.00 - Highview II\DWG\01_C140_GRADING_81947.00.dwg
Xrefs Attached: XLAYOUT_81947, XGRADING_81947, XEROS_81947, XBASE-ENG-WETLAND_81947-20, X-BORDER_81947-00_30x42, XUTIL_81947
Date Plotted: Oct 27, 2025 - 2:06pm

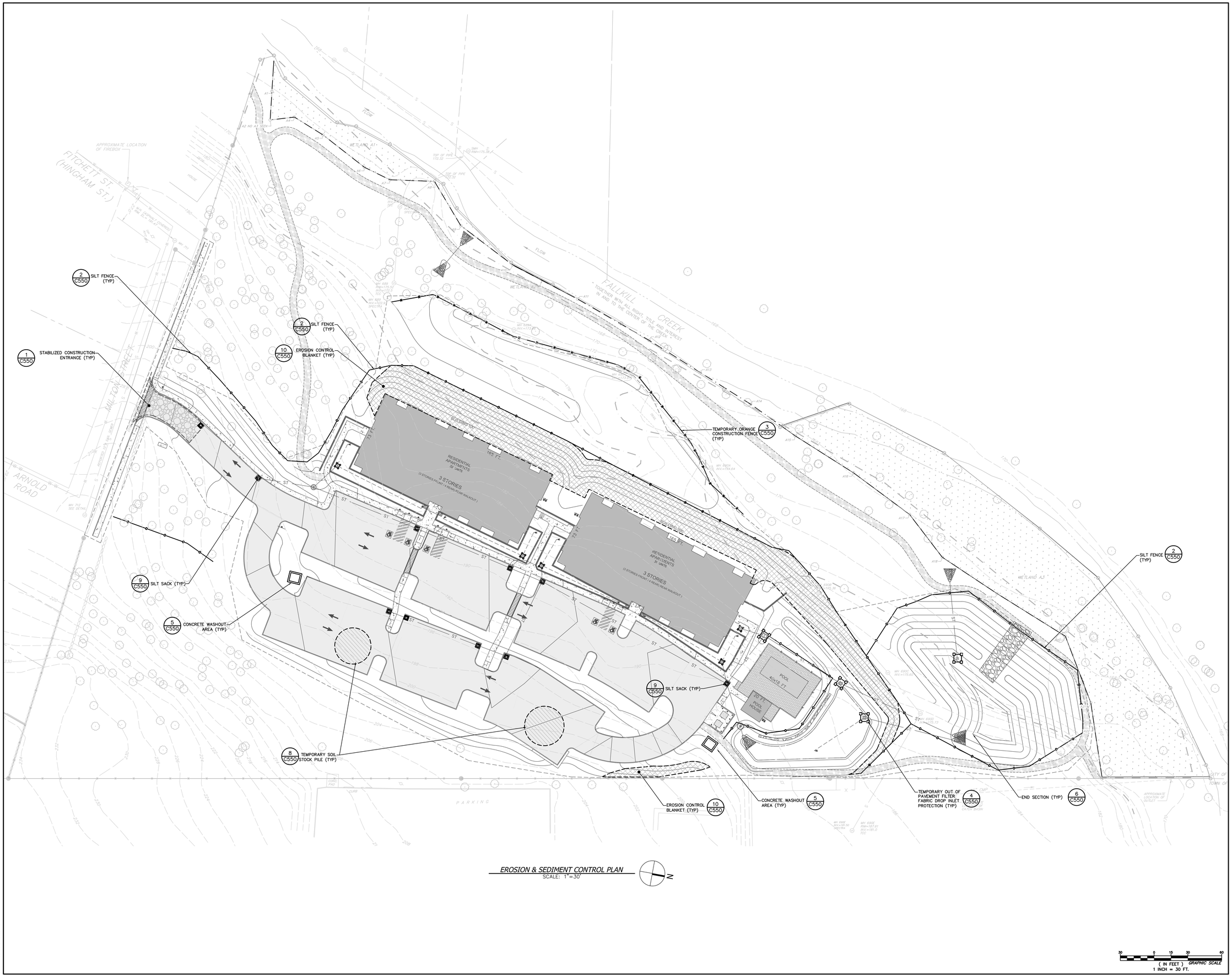

EROSION & SEDIMENT CONTROL PLAN
SCALE: 1"=30'

Drawing Name: B:\GLOBAL\Legacy\Chazen\Projects\81900-81999\81947.00 - Highview III\DWG\01_C150_EROS_81947-00.dwg
Xref's Attached: XLAYOUT_81947, XGRADING_81947, XEROS_81947, XUTIL_81947, XBASE-ENG-WETLAND_81947-00, XBASE-ENG_81947, X-BORDER_81947-00_30x42
Date Printed: Oct 27, 2025, 4:24pm

LaBella
Powered by partnership.

21 Fox Street
Poughkeepsie, NY 12601
845-454-3980

labellapc.com

NOT FOR CONSTRUCTION

EXP: ##/##/20## EXP: ##/##/20##

CERTIFICATE OF AUTHORIZATION NUMBER:
PROFESSIONAL ENGINEERING: 0021272
LAND SURVEYING: 0021271
GEOLOGICAL: 0021659

It is a violation of New York Education Law Art. 145 Sec. 7209 & Art. 147 Sec. 7307, for any person, unless acting under the direction of a licensed architect, professional engineer, or land surveyor, to alter an item in any way. If an item bearing the seal of an architect, engineer, or land surveyor is altered; the altering architect, engineer, or land surveyor shall affix to the item their seal and notation "altered by" followed by their signature and date of such alteration, and a specific description of the alteration.

© 2025 LaBella Associates

MASELO REALTY LLC
18 EASTVIEW ROAD
MONSEY, NY 10952

HIGHVIEW AT THE FALLKILL CREEK
CITY OF POUGHKEEPSIE
DUTCHESS COUNTY, NEW YORK

NO:	DATE:	DESCRIPTION:
Revisions		

PROJECT NUMBER: CZ81947.00
DRAWN BY: JRR
REVIEWED BY: KGA
ISSUED FOR: PLANNING BOARD REVIEW
DATE: 10/28/2025
DRAWING NAME:

EROSION & SEDIMENT CONTROL PLAN

DRAWING NUMBER:

C150

LaBella
Powered by partnership.

21 Fox Street
Poughkeepsie, NY 12601
845-454-3980

labellapc.com

NOT FOR CONSTRUCTION

EXP: ##/##/20## EXP: ##/##/20##

CERTIFICATE OF AUTHORIZATION NUMBER:
PROFESSIONAL ENGINEERING: 0021272
LAND SURVEYING: 0021271
GEOLOGICAL: 0021659

It is a violation of New York Education Law Art. 145 Sec. 7209 & Art. 147 Sec. 7307, for any person, unless acting under the direction of a licensed architect, professional engineer, or land surveyor, to alter an item in any way. If an item bearing the seal of an architect, engineer, or land surveyor is altered; the altering architect, engineer, or land surveyor shall affix to the item their seal and notation "altered by" followed by their signature and date of such alteration, and a specific description of the alteration.

© 2025 LaBella Associates

MASELO REALTY LLC
18 EASTVIEW ROAD
MONSEY, NY 10952

HIGHVIEW AT THE FALLKILL CREEK
CITY OF POUGHKEEPSIE
DUTCHESS COUNTY, NEW YORK

NO.	DATE:	DESCRIPTION:
Revisions		

PROJECT NUMBER: CZ81947.00
DRAWN BY: JRR
REVIEWED BY: KGA
ISSUED FOR: PLANNING BOARD REVIEW
DATE: 10/28/2025
DRAWING NAME:

UTILITY PLAN

DRAWING NUMBER:

C160

UTILITY PLAN
SCALE: 1"=30'

(IN FEET) GRAPHIC SCALE
1 INCH = 30 FT.

Drawing Name: B:\GLOBAL\Legacy\Chazown\Projects\81900-81999\81947.00 - Highview II\DWG\01_C-160_UTIL_81947-00.dwg
Xref's Attached: XLAYOUT_81947, XUTIL_81947, XBASE-ENG_81947, XGRADING_81947, XERO5_81947, XBORDER_81947-00_30x42
Date Printed: 10/27/2025, 4:54pm

SOIL RESTORATION NOTES:

IN AREAS WHERE SOIL DISTURBANCE HAS OCCURRED OUTSIDE OF BUILDINGS AND PAVEMENT AREAS, THE DISTURBED SUB-SOILS SHALL BE RETURNED TO ROUGH GRADE AND THE FOLLOWING SOILS RESTORATION STEPS APPLIED:

1) APPLY THREE INCHES OF COMPOST OVER SOIL. COMPOST SHALL BE AGED, FROM PLANT DERIVED MATERIALS, FREE OF VIABLE WEED SEEDS, HAVE NO VISIBLE FREE WATER OR DUST PRODUCED WHEN HANDLING, PASS THROUGH A HALF INCH SCREEN AND HAVE A PH SUITABLE TO GROW DESIRED PLANTS.
2) TILL COMPOST INTO THE SUBSOIL TO A DEPTH OF AT LEAST 12-INCHES USING A CAT-MOUNTED RIPPER, TRACTOR MOUNTED DISC, OR TILLER, MIXING AND CIRCULATING AIR AND COMPOST INTO SUB-SOILS.
3) ROCK-PICK UNTIL UPLIFTED STONE/ROCK MATERIALS OF FOUR INCHES AND LARGER SIZE ARE CLEANED OFF THE SITE.
4) APPLY TOPSOIL TO A DEPTH OF SIX INCHES.

LANDSCAPING & LIGHTING LEGEND:

- PROPOSED BUILDING
- PROPOSED TREE LINE
- LANDSCAPE BED EDGING
- PROPOSED DECIDUOUS TREES
- PROPOSED CONIFEROUS TREES
- PROPOSED SHRUBS
- 43 / CO — PLANT QUANTITY / PLANT NAME
- DRIP EDGE
- MULCH BED

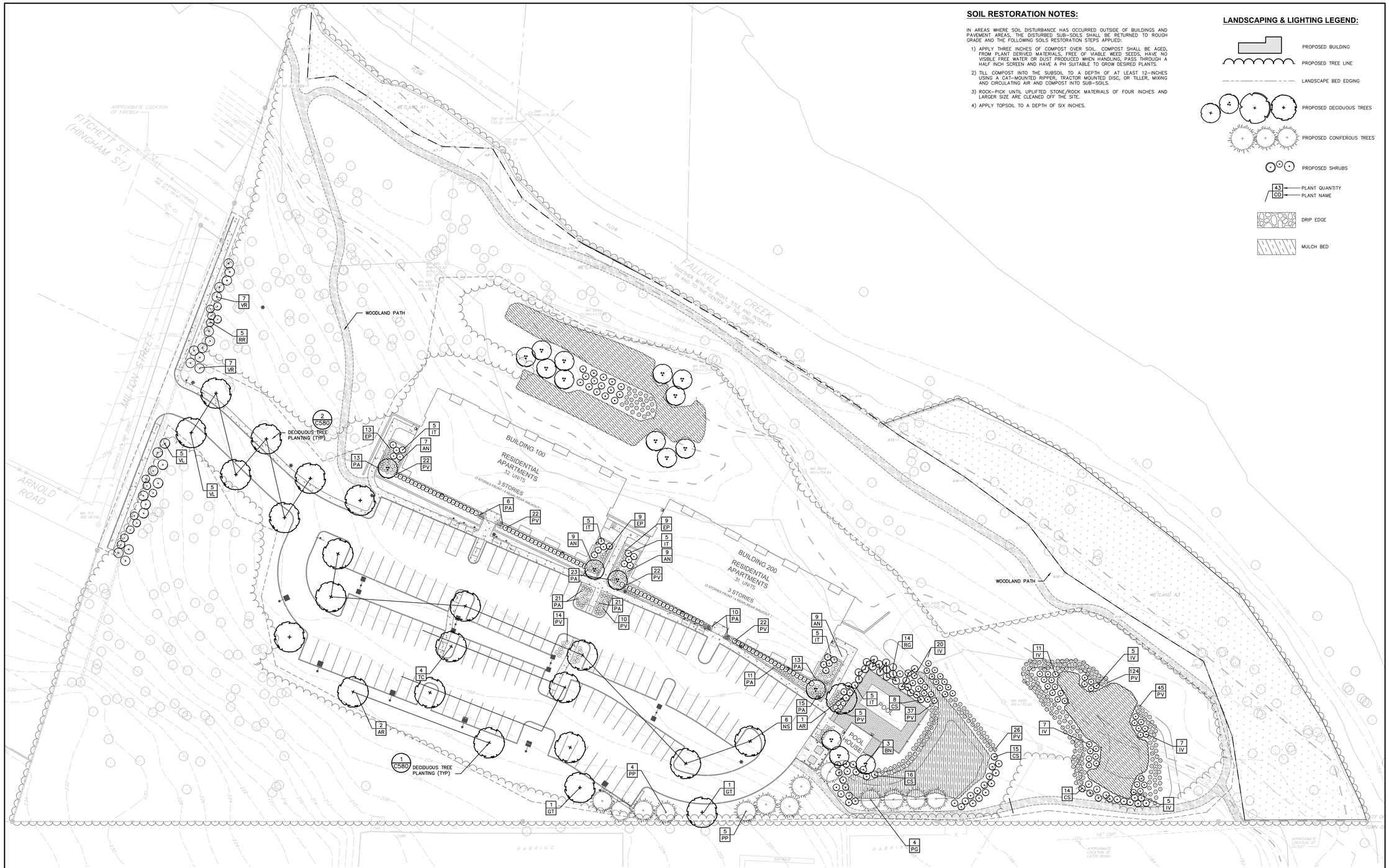

LANDSCAPING PLAN
SCALE: 1"=30'

PLANT LIST

QTY	ABRV	BOTANICAL NAME	COMMON NAME	SIZE	COND	SPACING	REMARKS
TREES							
3	AR	Acer rubrum 'October Glory'	October Glory Red Maple	2 – 2.5" Cal.	B&B	As Shown	
6	BN	Betula nigra 'Heritage'	Heritage River Birch	10-12'	B&B	As Shown	
9	GT	Gleditsia triacanthos inermis	Thornless Honeylocust	3" – 3.5" Cal.	B&B	As Shown	
6	NS	Nyssa sylvatica	Black Tupelo	3 – 3.5" Cal.	B&B	As Shown	
7	PG	Picea glauca	White Spruce	8' – 10'	B&B	As Shown	
3	PP	Picea pungens glauca	Colorado Blue Spruce	8' – 10'	B&B	As Shown	
4	TC	Tilia cordata 'Greenspire'	Greenspire Linden	3 – 3.5" Cal.	B&B	As Shown	
6	UA	Ulmus americana 'Princeton'	Princeton Elm	3–3.5"	B&B	As Shown	
SHRUBS							
38	CS	Cornus sericea 'Baileyi'	Red Twig Dogwood	#5	cont.	As Shown	
55	IV	Ilex verticillata	Winterberry Holly	#5	cont.	As Shown	
25	IT	Itea virginica	Virginia Sweetspire	#5	cont.	As Shown	
16	RR	Rhododendron 'Roseum Elegans'	Hybrid Pink Rhododendron	30-36"	B&B	As Shown	
16	RG	Rhus aromatica 'Gro Low'	Grow Low Sumac	#5	cont.	As Shown	
13	VL	Viburnum lentago	Nannyberry Viburnum	3-4'	B&B	As Shown	
7	UA	Viburnum rhytidophyllum	Leatherleaf Viburnum	3-4'	B&B	As Shown	
PERENNIALS/GRASSES							
138	PA	Pennisetum alopecuroides	Dwarf Fountain Grass	#2	cont.	As Shown	
325	PV	Panicum virgatum	Switchgrass	#2	cont.	As Shown	
34	VL	Aster novae-angliae	New England Aster	#2	cont.	As Shown	
31	EP	Purple Coneflower	Echinacea purpurea	#2	cont.	As Shown	

30 0 15 30 60
(IN FEET) GRAPHIC SCALE
1 INCH = 30 FT.

LaBella Powered by partnership.
21 Fox Street
Poughkeepsie, NY 12601
845-454-3980
labellapc.com

NOT FOR CONSTRUCTION
EXP: ##/##/20## EXP: ##/##/20##

CERTIFICATE OF AUTHORIZATION NUMBER:
PROFESSIONAL ENGINEERING: 0021272
LAND SURVEYING: 0021271
GEOLOGICAL: 0021659

It is a violation of New York Education Law Art. 145 Sec. 7209 & Art. 147 Sec. 7307, for any person, unless acting under the direction of a licensed architect, professional engineer, or land surveyor, to alter an item in any way. If an item bearing the seal of an architect, engineer, or land surveyor is altered; the altering architect, engineer, or land surveyor shall affix to the item their seal and notation "altered by" followed by their signature and date of such alteration, and a specific description of the alteration.

© 2025 LaBella Associates

MASELO REALTY LLC
18 EASTVIEW ROAD
MONSEY, NY 10952

HIGHVIEW AT THE FALLKILL CREEK
CITY OF POUGHKEEPSIE
DUTCHESS COUNTY, NEW YORK

NO.	DATE:	DESCRIPTION:
Revisions		

PROJECT NUMBER: CZ81947.00
DRAWN BY: JRR
REVIEWED BY: KGA
ISSUED FOR: PLANNING BOARD REVIEW
DATE: 10/28/2025
DRAWING NAME: **LANDSCAPING PLAN**
DRAWING NUMBER: **C180**

Drawing Name: B:\GLOBAL\Legacy\Chazam\Projects\81900-81999\81947.00 - Highview II\DWG\01_C180_81947_LAND.dwg
Xref's Attached: XLAYOUT_81947, XLANDSCAPE_81947, XBASE-ENG_81947, XBASE-ENG-WETLAND_81947-20, XGRADING_81947, XBORDER_81947-A0_36x42
Date Printed: 10/27/2025 1:47pm

PHOTOMETRIC LEGEND:

- PROPERTY LINE
- BUILDING
- 1.2 — FOOT CANDLE TICK MARKS
- PHOTOMETRIC CONTOUR
- LIGHT POLE
- LIGHT WALL PACK
- POST AND LUMINAIRE

ABBREVIATIONS:
W WALL MOUNTED
LP LIGHT POLE –ARM MOUNTED
PT POST TOP

LIGHTING NOTES:

1. GRID NUMBERS SHOWN REPRESENT FOOTCANDLE VALUES AT GROUND PLANE.
2. THE LIGHTING FIXTURES, SURFACE LOCATIONS AND ASSOCIATED PHOTOMETRIC VALUES ARE IDENTIFIED BY TCC. DETAILED DESIGN OF THE LIGHTING SPECIFICATIONS, FOUNDATION DESIGN, LIGHTING CONDUIT, WIRING, AND CONTROL CIRCUITRY SHALL BE BY OTHERS.
3. IF DISCREPENCIES EXIST BETWEEN THE LIGHTING SCHEDULE AND LIGHTING PLAN, THE PLAN SHALL DICTATE.

LIGHTING SCHEDULE

Label	Mounting Height	QTY	Manufacturer	Catalog Number	Description	Lamp	Number Lamps	Filename	Lumens per Lamp	LLF	Wattage	Efficiency	Notes
W-T2	10 ft.	2	HUBBELL OUTDOOR LIGHTING	TRP1-12L15-3K7-2	GeoPak Size 1		1	TRP1-12L15-3K7-2.IES	1497	0.92	13.9	100%	
W-T3	10 ft.	2	HUBBELL OUTDOOR LIGHTING	TRP1-12L15-3K7-3	GeoPak Size 1		1	TRP1-12L15-3K7-3.IES	1478	0.92	13.9	100%	
W-T4	10 ft.	6	HUBBELL OUTDOOR LIGHTING	TRP1-12L15-3K7-4	GeoPak Size 1		1	TRP1-12L15-3K7-4.IES	1471	0.92	13.9	100%	
PT-Y2	12 ft.	3	ARCHITECTURAL AREA LIGHTING	ALN445-Y2-32LED-3K-SBL-700	TOWNE COMMONS - ALN445 ONE PIECE SAND BLASTED LENS.	C-70-CRI DATA SHOWN IS ABSOLUTE.	1	ALN445-Y2-32LED-3K-SBL-700.ies	5015	0.93	74.8	100%	
PT-Y3	12 ft.	4	ARCHITECTURAL AREA LIGHTING	ALN445-Y3-32LED-3K-SBL-700	TOWNE COMMONS - ALN445 ONE PIECE SAND BLASTED LENS.	C-70-CRI DATA SHOWN IS ABSOLUTE.	1	ALN445-Y3-32LED-3K-SBL-700.ies	4829	0.93	74.9	100%	
PT-Y5	12 ft.	4	ARCHITECTURAL AREA LIGHTING	ALN445-Y5-32LED-3K-SBL-700	TOWNE COMMONS - ALN445 ONE PIECE SAND BLASTED LENS.	C-70-CRI DATA SHOWN IS ABSOLUTE.	1	ALN445-Y5-32LED-3K-SBL-700.ies	4771	0.93	74	100%	
(LP 1)-R2-530-L2	20 ft.	4	Selux Corporation	DSC4Lx-R2-5G530-30-XX-XX-UNV			1	DSC4Lx-R2-XX-5G530-30-XX-XX-UNV.ies	4854	0.94	94	100%	
(LP 2)-R2-350_HS	16 ft.	6	Selux Corporation	DSC4Lx-R2-5G350-30-XX-XX-UNV-HS	WITH HOUSE-SIDE SHIELD		1	DSC4Lx-R2-XX-5G350-30-XX-XX-UNV-HS.ies	2349	0.94	32	100%	

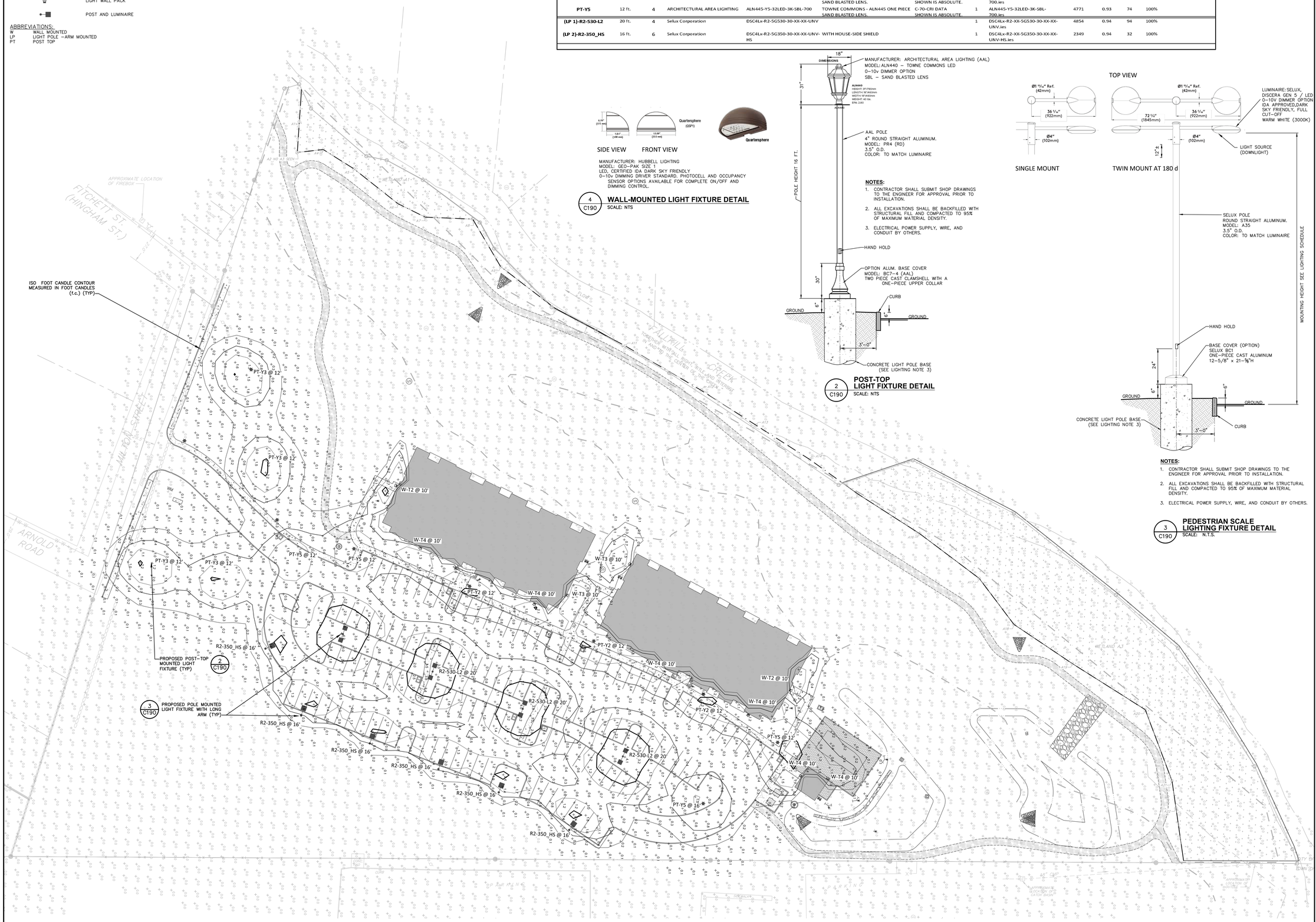

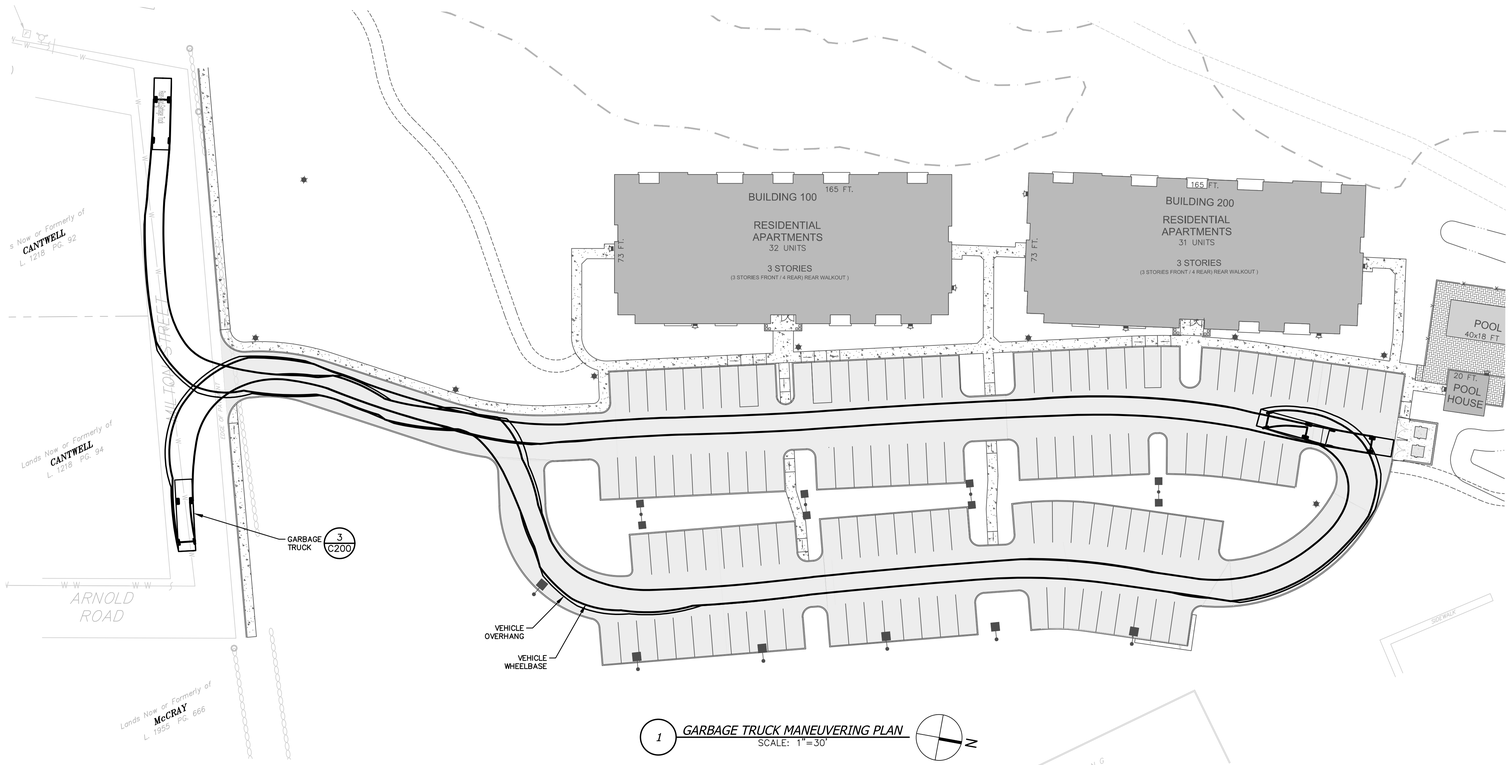

1 GARBAGE TRUCK MANEUVERING PLAN
SCALE: 1"=30'

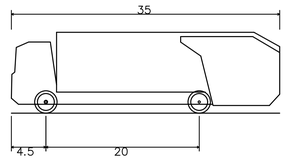

Rear–Load Garbage Truck	
Overall Length	35.000ft
Overall Width	8.375ft
Overall Body Height	10.546ft
Min Body Ground Clearance	1.000ft
Track Width	8.375ft
Lock–to–lock time	6.00s
Curb to Curb Turning Radius	29.300ft

3 GARBAGE TRUCK PROFILE
SCALE: 1"=30'

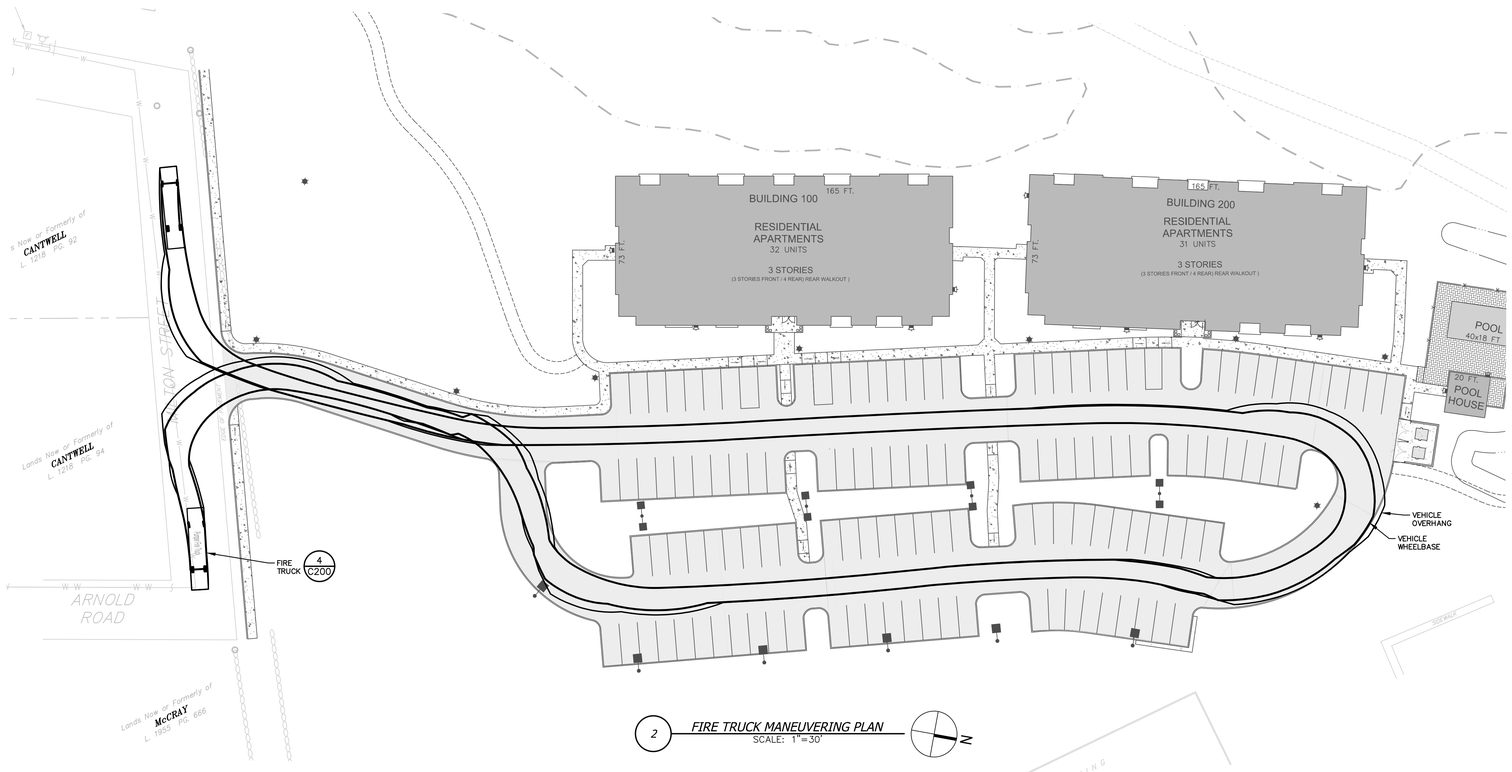

2 FIRE TRUCK MANEUVERING PLAN
SCALE: 1"=30'

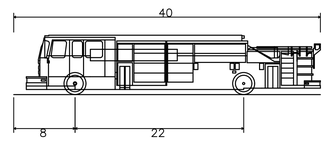

Pumper Fire Truck	
Overall Length	40.000ft
Overall Width	8.167ft
Overall Body Height	7.745ft
Min Body Ground Clearance	0.656ft
Track Width	8.167ft
Lock–to–lock time	5.00s
Max Wheel Angle	45.00°

4 FIRE TRUCK PROFILE
SCALE: 1"=30'

LaBella
Powered by partnership.
21 Fox Street
Poughkeepsie, NY 12601
845-454-3980
labellapc.com

NOT FOR CONSTRUCTION
EXP. ##/##/20## EXP. ##/##/20##

CERTIFICATE OF AUTHORIZATION NUMBER:
PROFESSIONAL ENGINEERING: 0021272
LAND SURVEYING: 0021271
GEOLOGICAL: 0021659

It is a violation of New York Education Law Art. 145 Sec. 7209 & Art. 147 Sec. 7307, for any person, unless acting under the direction of a licensed architect, professional engineer, or land surveyor, to alter an item in any way. If an item bearing the seal of an architect, engineer, or land surveyor is altered; the altering architect, engineer, or land surveyor shall affix to the item their seal and notation "altered by" followed by their signature and date of such alteration, and a specific description of the alteration.

© 2025 LaBella Associates

MASELO REALTY LLC
18 EASTVIEW ROAD
MONSEY, NY 10952

HIGHVIEW AT THE FALLKILL CREEK
CITY OF POUGHKEEPSIE
DUTCHESS COUNTY, NEW YORK

NO:	DATE:	DESCRIPTION:
Revisions		

PROJECT NUMBER: CZ81947.00
DRAWN BY: JRR
REVIEWED BY: KGA
ISSUED FOR: PLANNING BOARD REVIEW
DATE: 10/28/2025
DRAWING NAME:

VEHICLE MANEUVERING PLAN

DRAWING NUMBER:

C200

Drawing Name: B:\GLOBAL\Legacy\Chazen\Projects\81900-81999\81947.00 - Highview II\DWG\01_C200_VEHMOV_81947-00.dwg
Xref's Attached: XBASE-ENG_81947; XLAYOUT_81947; XBASE-ENG-WETLAND_81947-00; XVEHICLE_81947; XBORDER_81947-00_30x42
Date Printed: Oct 27, 2025, 4:25pm

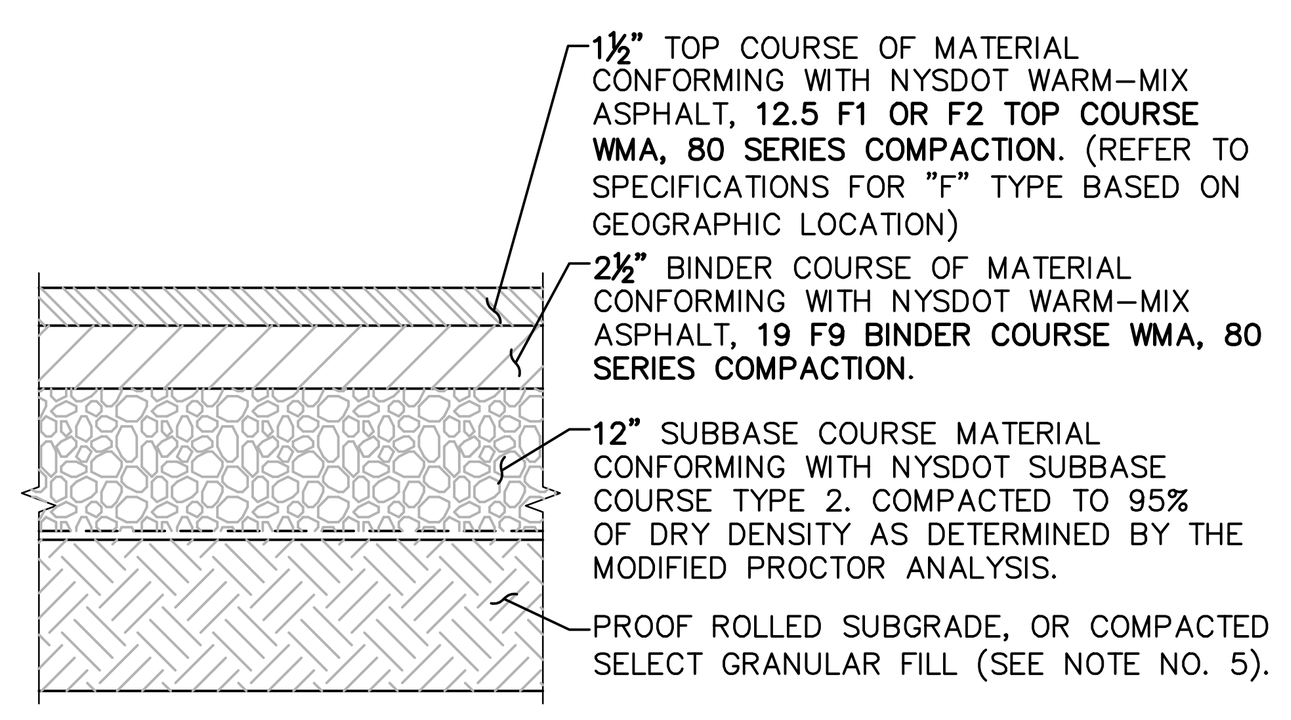

NOTES:
1. MATERIALS AND METHODS OF CONSTRUCTION SHALL BE IN CONFORMANCE WITH THE NEW YORK STATE DEPARTMENT OF TRANSPORTATION (NYSDOT) STANDARD SPECIFICATIONS FOR CONSTRUCTION AND MATERIALS, DATED **"CURRENT VERSION"**, AND ALL ADDENDA THERE TO.
2. SUBBASE MATERIAL SHALL CONFORM WITH **SECTION 304** – SUBBASE COURSE OF THE ABOVE REFERENCED NYSDOT STANDARD SPECIFICATIONS AND THE TYPE CALLED OUT IN THESE DRAWINGS.
3. HOT MIX ASPHALT (HMA) PAVEMENT SHALL CONFORM WITH **SECTION 400**–WARM MIX ASPHALT OF THE ABOVE REFERENCED NYSDOT STANDARD SPECIFICATIONS AND THE TYPE CALLED OUT IN THESE DRAWINGS. ALTHOUGH **SECTION 400** IN ITS ENTIRETY IS REFERENCED, THE WARM MIX ASPHALT (WMA) PAVEMENT(S) SPECIFIED FOR THIS CONTRACT SHALL BE AS SPECIFIED UNDER **SECTION 402**–WARM MIX ASPHALT (WMA) PAVEMENTS.
4. TACK COAT WHEN SPECIFIED OR CALLED OUT IN THESE DRAWINGS OR REQUIRED BY THE REFERENCED SPECIFICATIONS SHALL CONFORM WITH **SECTION 407**–TACK COAT OF THE ABOVE REFERENCED NYSDOT STANDARD SPECIFICATIONS.
5. WHERE IT IS NECESSARY TO PLACE FILL FOR PURPOSES OF BRINGING THE SUBGRADE ELEVATION UP TO A SPECIFIED GRADE, THE FILL MATERIAL PLACED SHALL BE IN CONFORMANCE WITH **SECTION 203**– EXCAVATION AND EMBANKMENT OF THE ABOVE REFERENCED NYSDOT STANDARD SPECIFICATIONS.
6. PAVEMENT SECTION SHOWN IS PRELIMINARY. PRIOR TO BIDDING AND COMMENCEMENT OF CONSTRUCTION, THE FINAL DESIGN OF THE PAVEMENT SECTION MUST BE PREPARED BY A NYS LICENSED PROFESSIONAL ENGINEER AND MUST BE BASED ON A CURRENT GEOTECHNICAL REPORT PREPARED FOR THIS PROJECT.

© 1 **PAVEMENT SECTION DETAIL**
SCALE: NOT TO SCALE

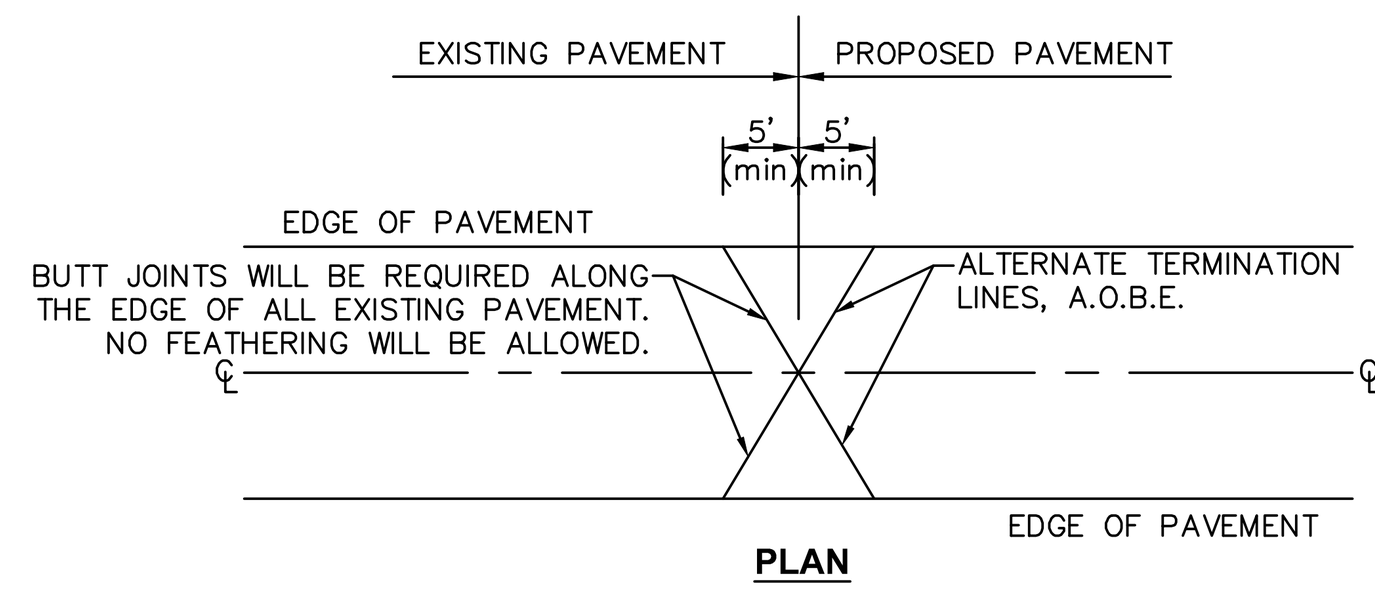

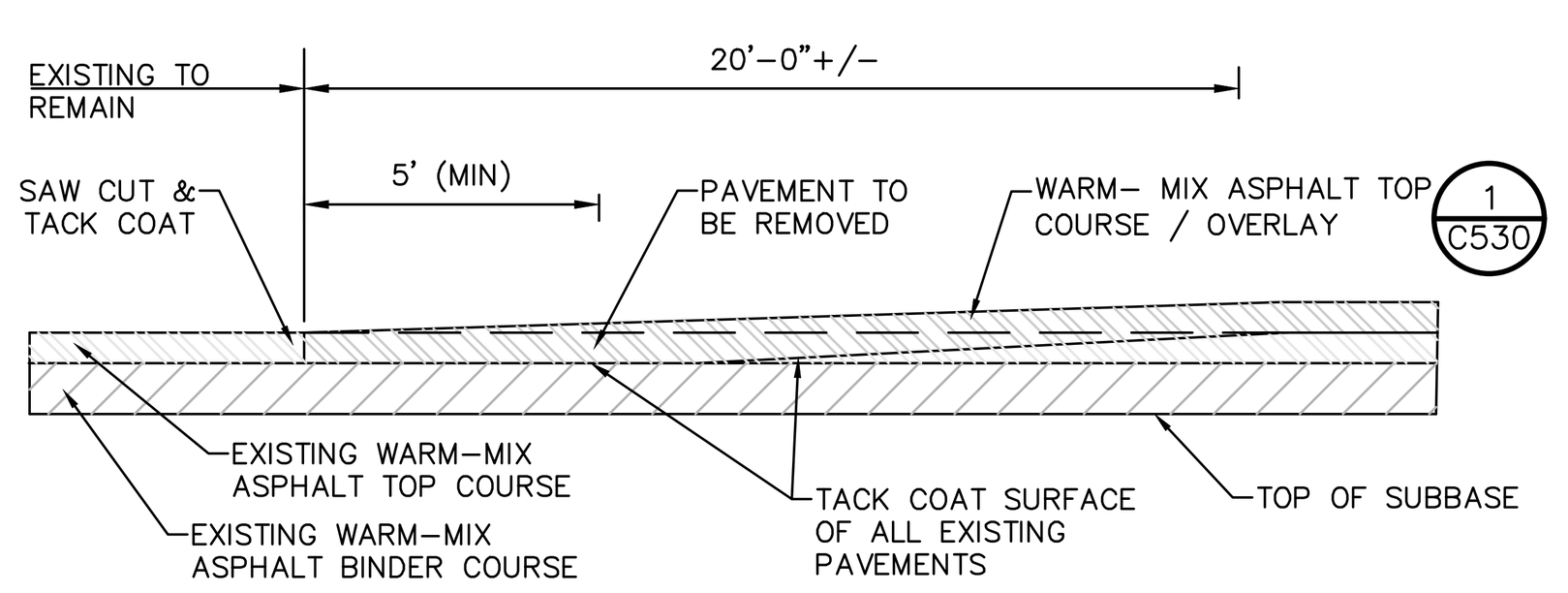

SECTION

© 5 **PAVEMENT OVERLAY TRANSITION DETAIL**
SCALE: NOT TO SCALE

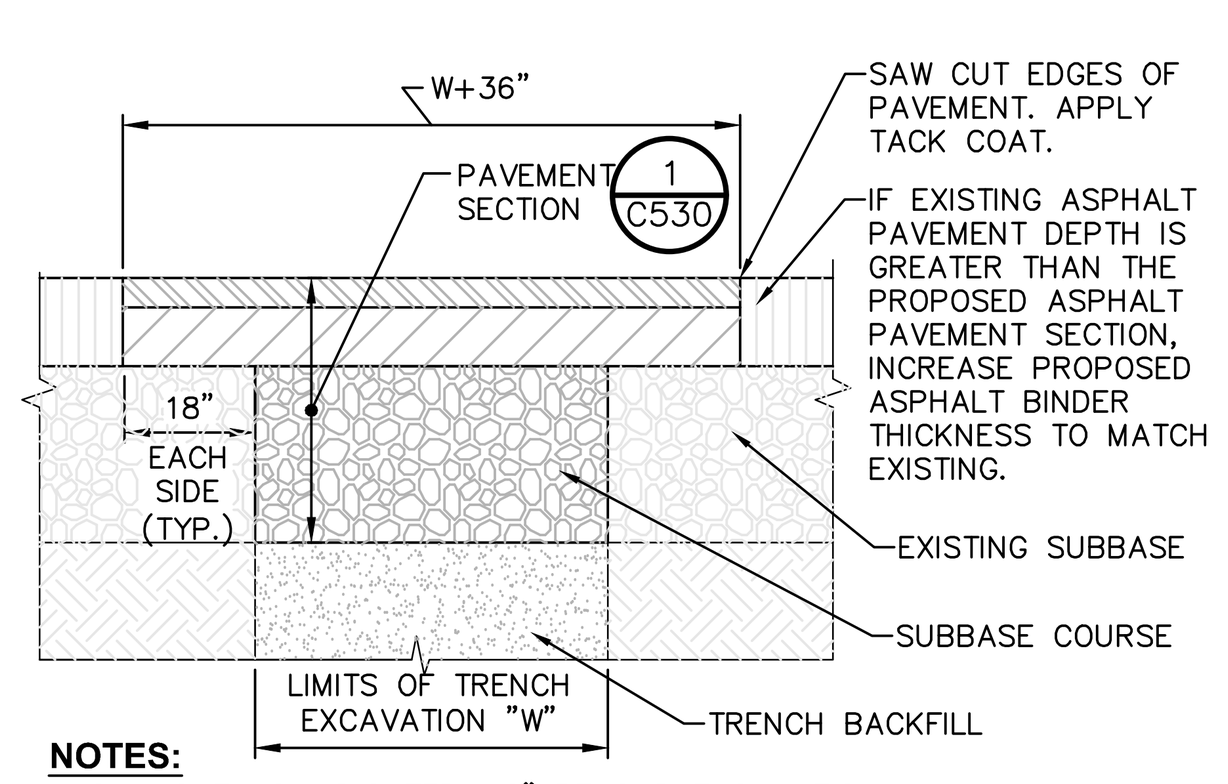

NOTES:
1. SAW CUT AS INDICATED, 18" BEYOND EXCAVATION.
2. FURNISH, PLACE, AND COMPACT SUBBASE.
3. TACK COAT IN ACCORDANCE WITH NYSDOT STANDARD SPEC.
4. FURNISH AND PLACE ASPHALT CONCRETE PAVEMENT AS SPECIFIED.

© 6 **TRENCH SURFACE RESTORATION IN ASPHALT PAVEMENT**
SCALE: NOT TO SCALE

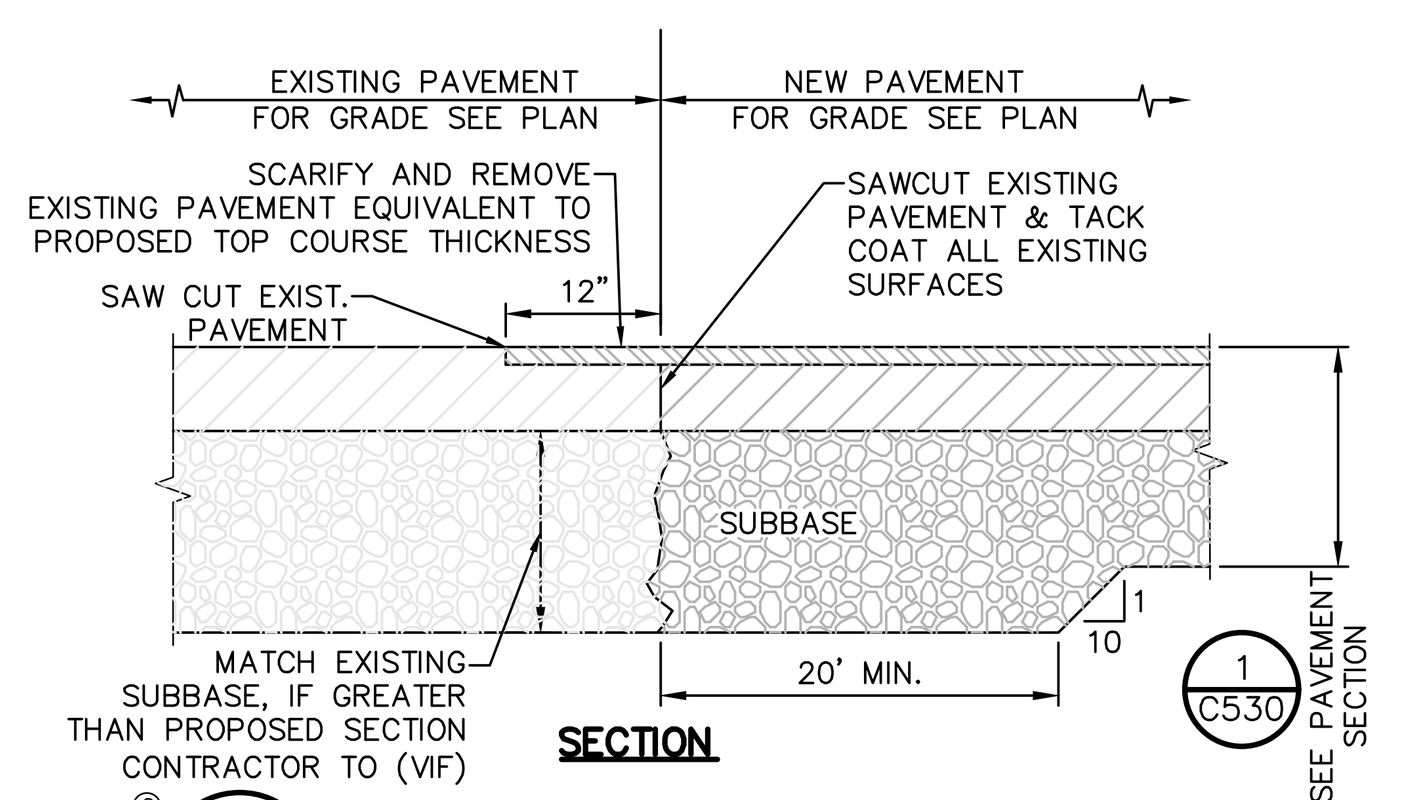

© 7 **PAVEMENT TRANSITION DETAIL**
SCALE: NOT TO SCALE

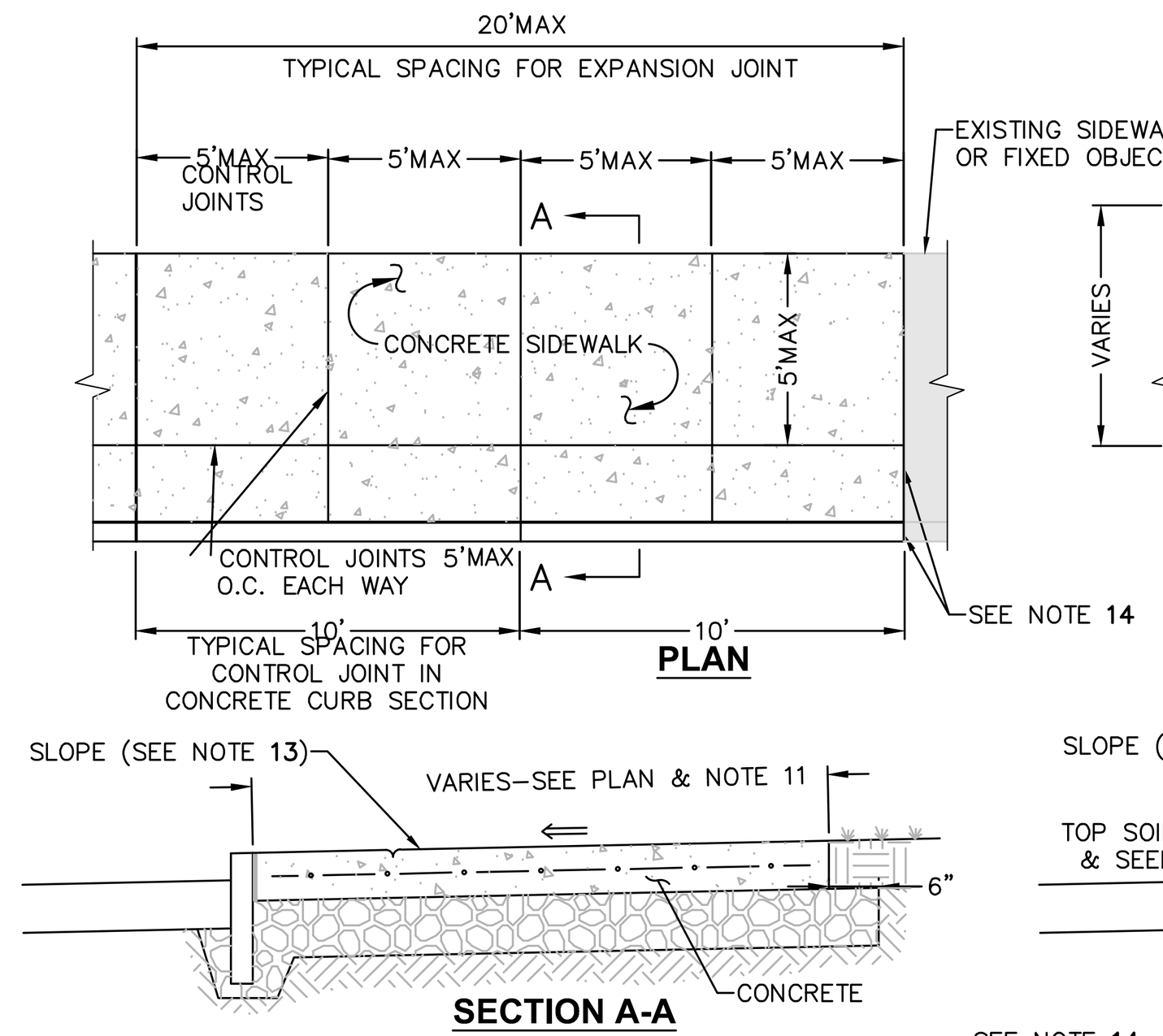

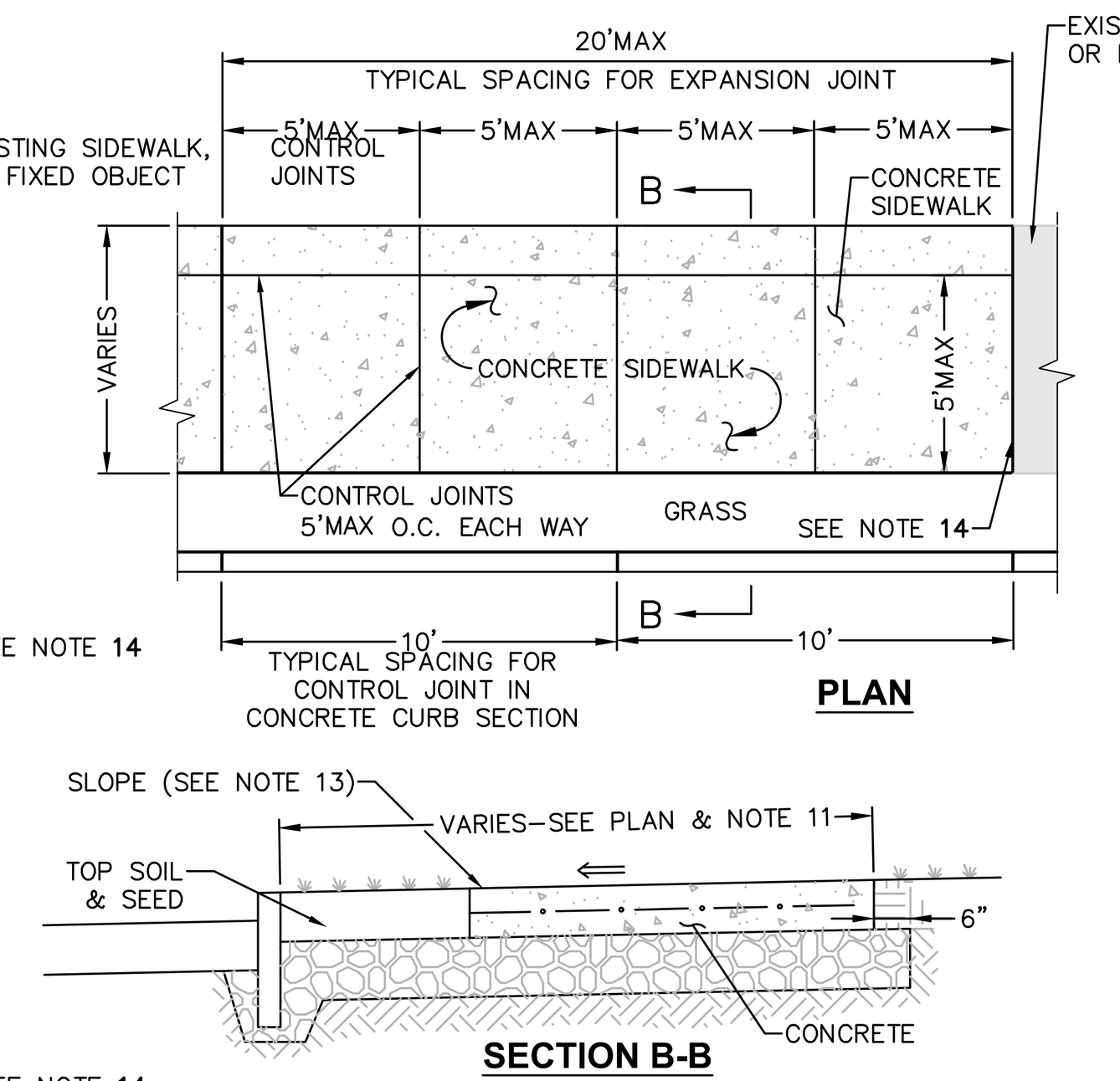

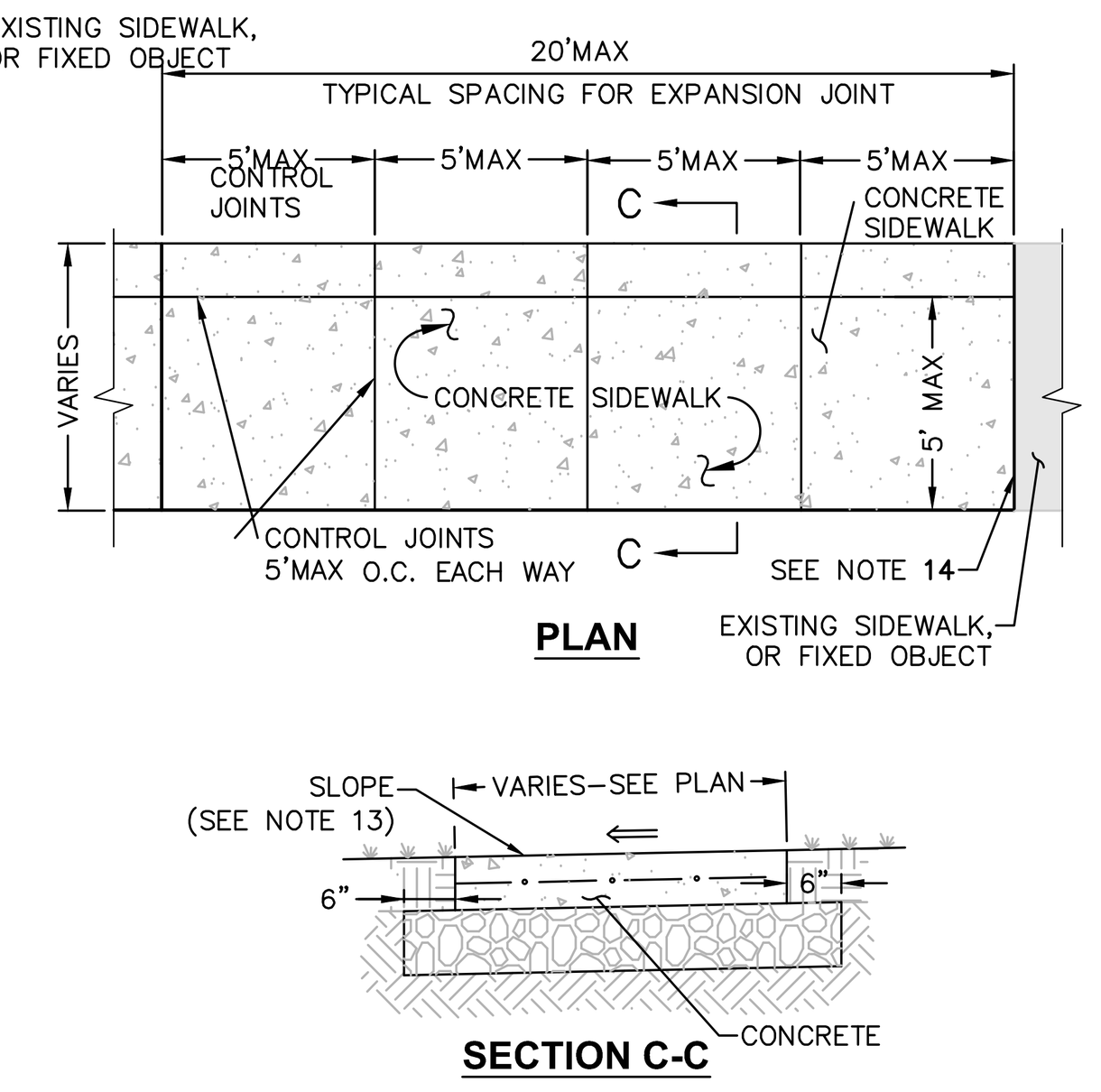

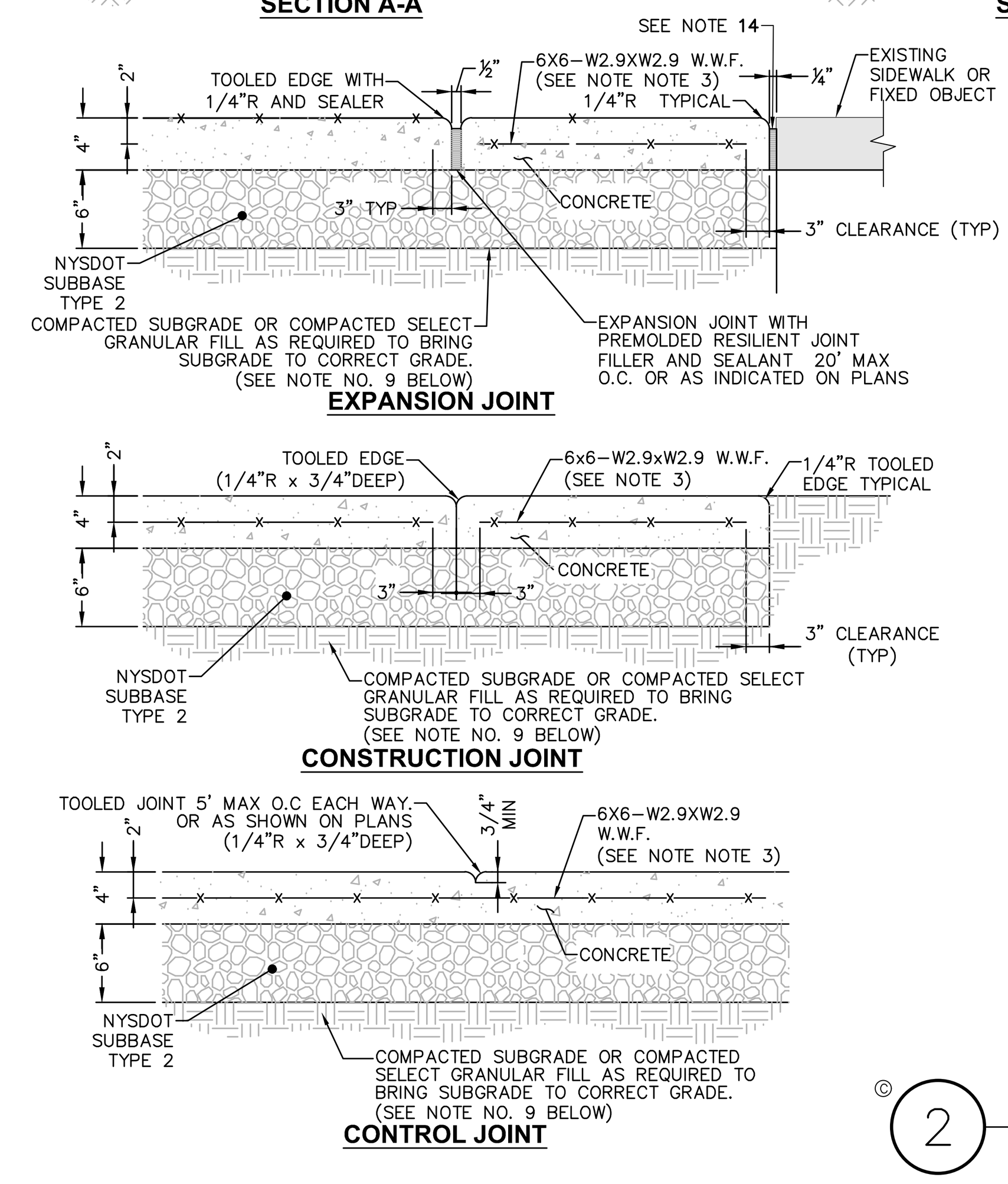

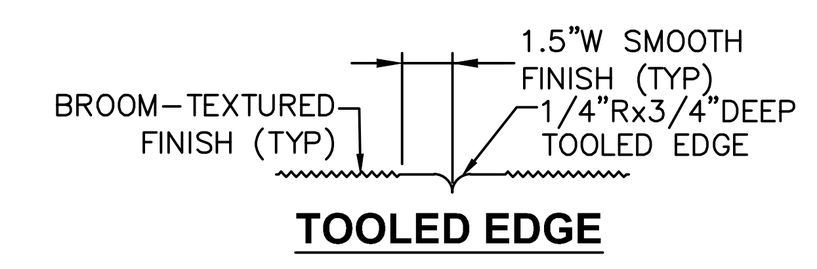

NOTES:
1. MATERIAL AND METHODS OF CONSTRUCTION SHALL BE IN CONFORMANCE WITH THE NEW YORK STATE DEPARTMENT OF TRANSPORTATION (NYSDOT) STANDARD SPECIFICATIONS FOR CONSTRUCTION AND MATERIALS, DATED "CURRENT VERSION", AND ALL ADDENDA THERE TO.
2. ALL CONCRETE SHALL BE **4,500** CONCRETE. CONCRETE MATERIALS, PLACEMENT, AND CONSTRUCTION SHALL CONFORM WITH **SECTION 500** OF THE ABOVE REFERENCED NYSDOT STANDARD SPECIFICATIONS.
3. REINFORCING STEEL FOR CONCRETE SHALL CONFORM WITH SECTION 556 – REINFORCING STEEL FOR CONCRETE STRUCTURES OF THE ABOVE REFERENCED NYSDOT STANDARD SPECIFICATIONS AND AS SPECIFICALLY CALLED OUT IN THE DRAWINGS.
4. ALL EXPOSED SURFACES SHALL HAVE A BROOM TEXTURED FINISH & TOOLED EDGES. TOOL SHALL PROVIDE MAX 1-1/2" WIDE SMOOTH TROWEL FINISH AT JOINT.
5. EXPANSION JOINTS SHALL BE LOCATED A MAXIMUM OF 20' ON CENTER, OR AS INDICATED ON PLANS.
6. JOINTS SHALL NOT BE SAW CUT.
7. EXPOSED CONCRETE SURFACES SHALL BE TREATED WITH **"SUREBOND" 1100 RESIN-BASED, WATER EMULSION CONCRETE CURING COMPOUND**, OR EQUAL. RATE AND METHOD OF APPLICATION SHALL BE IN ACCORDANCE WITH MANUFACTURER'S RECOMMENDATIONS.
8. SUBBASE MATERIAL SHALL CONFORM WITH **SECTION 304** OF THE ABOVE REFERENCED NYSDOT STANDARD.
9. WHERE IT IS NECESSARY TO PLACE FILL FOR PURPOSE OF BRINGING THE SUBGRADE ELEVATION UP TO A SPECIFIED GRADE, THE FILL MATERIAL PLACED SHALL BE IN ACCORDANCE WITH SECTION 203-EXCAVATION AND EMBANKMENT OF THE ABOVE REFERENCED NYSDOT STANDARD SPECIFICATIONS.
10. ALL WORK SHALL CONFORM WITH **SECTION 608**–SIDEWALK, DRIVEWAYS, AND BICYCLE PATHS OF THE ABOVE REFERENCED NYSDOT STANDARD SPECIFICATIONS.
11. ALL WORK SHALL CONFORM WITH AASHTO GEOMETRIC DESIGN OF HIGHWAYS AND STREET 2011, ICC A117.1 2009. OR LATEST EDITION.
12. SIDEWALK WIDTH SHOWN ON THE PLANS IS TO BE MEASURED FROM THE BACK OF THE CURB.
13. SIDEWALKS SHALL HAVE A CROSS SLOPE OF **1.5%** MAX. UNLESS OTHERWISE NOTED ON PLAN.
14. INSTALL EXPANSION JOINT WITH PREMOLDED RESILIENT JOINT FILLER & SEALANT AT ALL EXISTING SIDEWALKS, CURBS, FIXED OBJECTS, ETC., INCLUDING THOSE PLACED ON PREVIOUS DAYS.

© 2 **CONCRETE SIDEWALK DETAIL**
SCALE: NOT TO SCALE

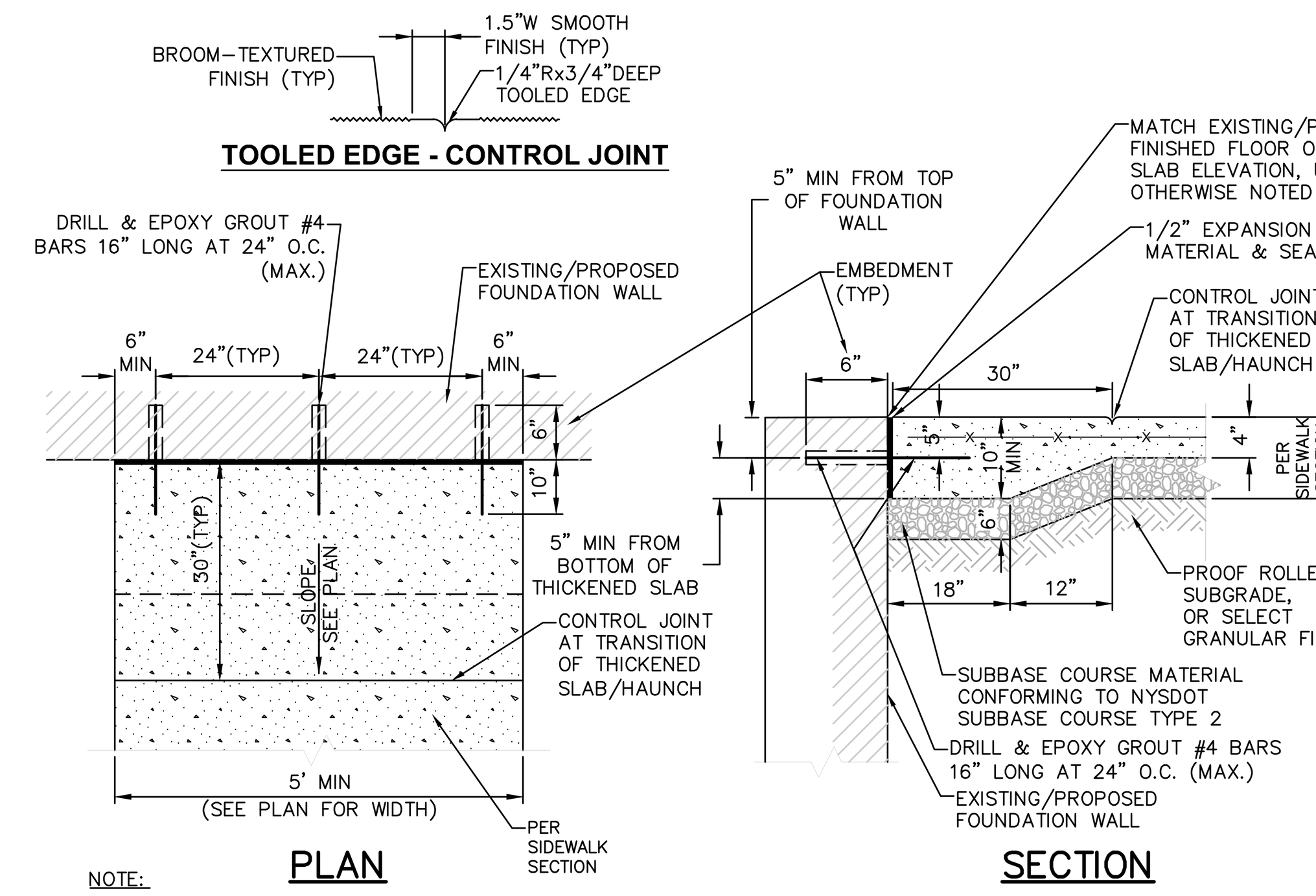

NOTE:
1. THICKENED (HAUNCH) & ADDITIONALLY REINFORCED CONCRETE SIDEWALK ENDS ARE REQUIRED AT ALL EXISTING/PROPOSED BUILDING ENTRANCES.
2. SEE CONCRETE SIDEWALK DETAIL FOR ADDITIONAL DETAILS & NOTES.

© 3 **CONCRETE SIDEWALK AT BUILDING ENTRANCES**
SCALE: NOT TO SCALE

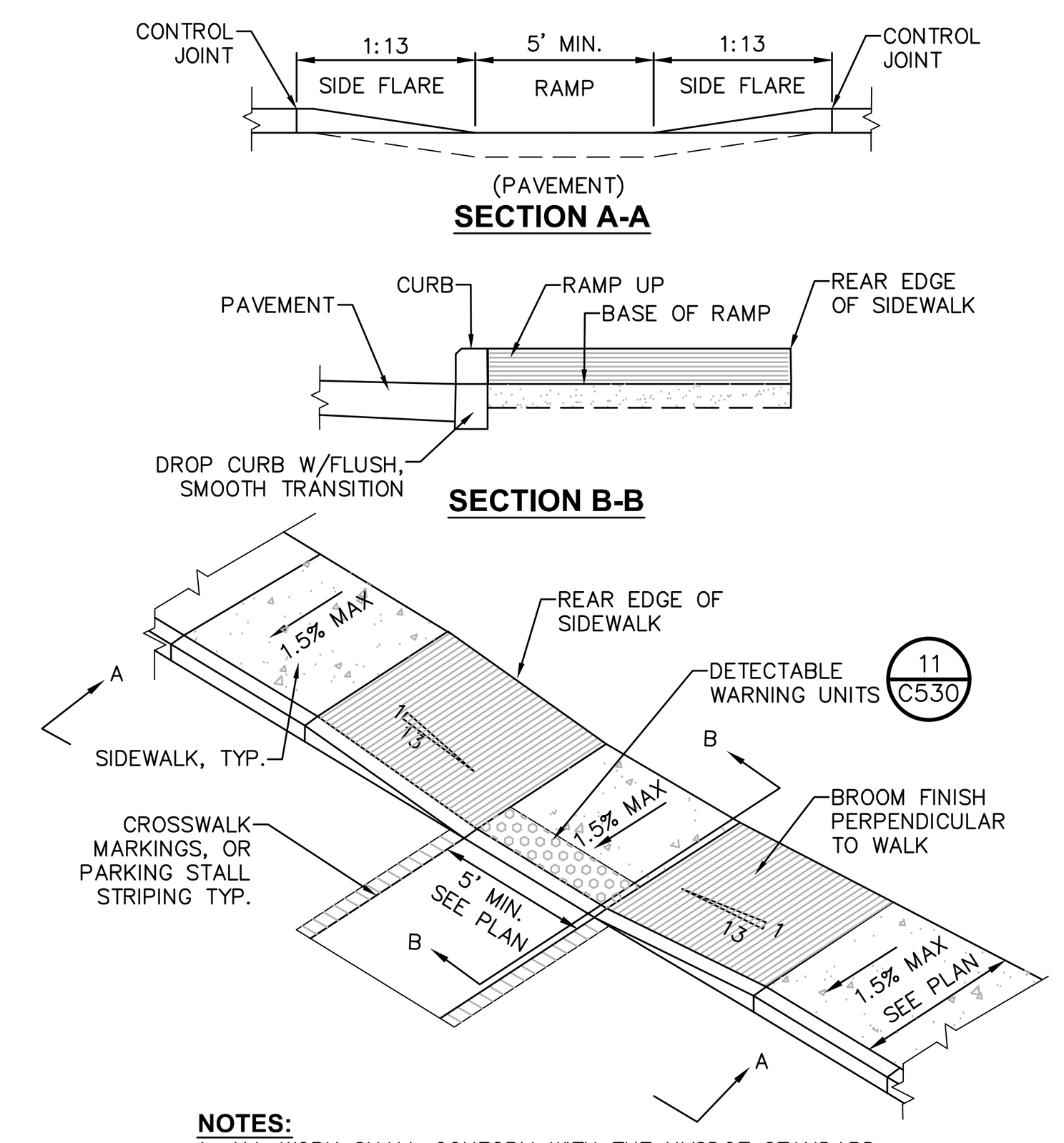

NOTES:
1. ALL WORK SHALL CONFORM WITH THE NYSDOT STANDARD SPECIFICATION FOR CONSTRUCTION AND MATERIALS DATED, **"CURRENT VERSION"**, AND ALL ADDENDA THERE TO; SPECIFICALLY **SECTION 608**– SIDEWALKS, DRIVEWAYS, AND BICYCLE PATHS.
2. SLOPE RAMP AND SIDE FLARES AS INDICATED IN THE PLANS OR AS ORDERED BY THE ENGINEER.
3. DETECTABLE WARNING UNITS SHALL BE PROVIDED ON ALL RAMPS IN ACCORDANCE W/ ADA REQUIREMENTS.

© 4 **PEDESTRIAN RAMP SECTION - DROP CURB**
SCALE: NOT TO SCALE

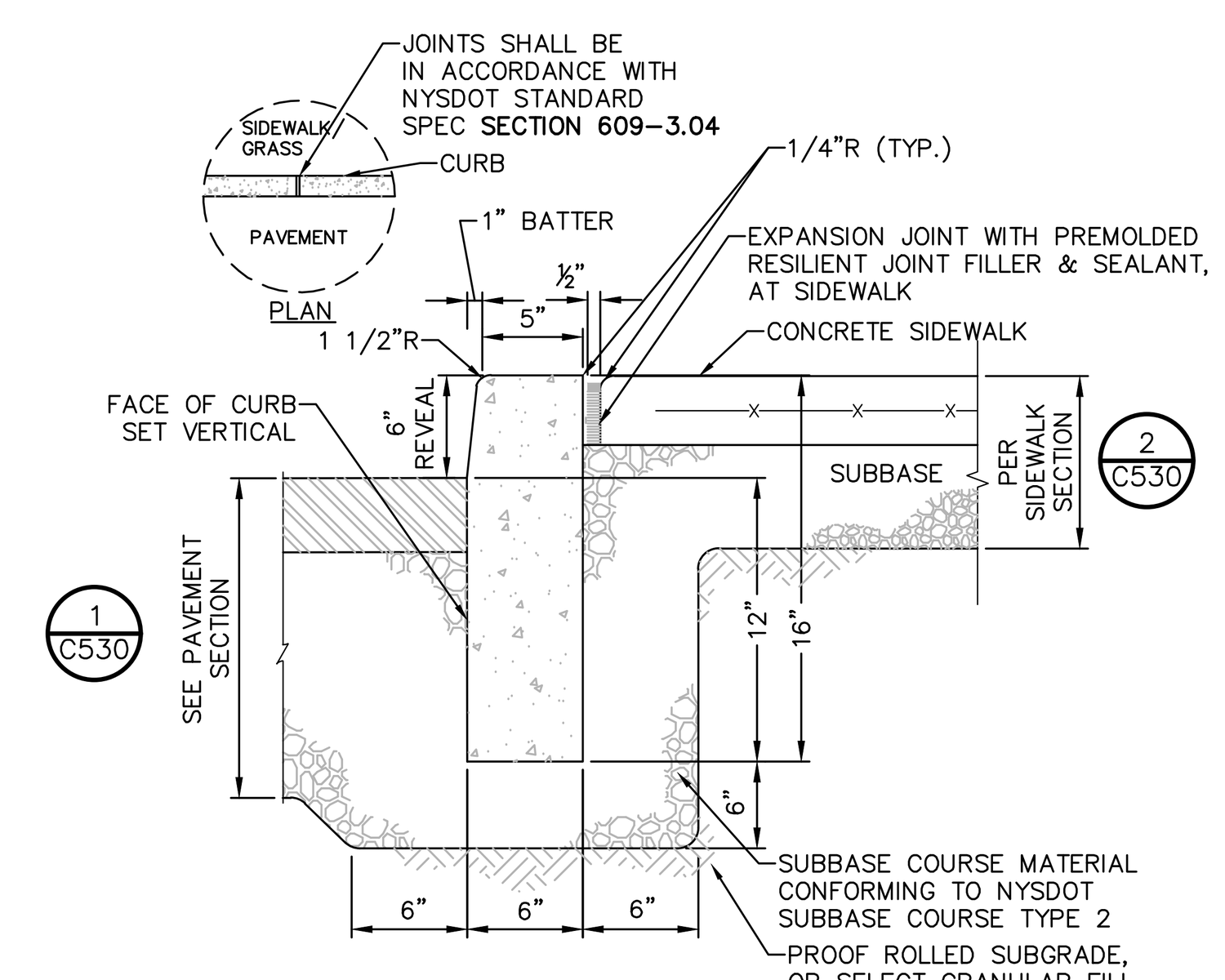

NOTES:
1. CONCRETE CURB SHALL BE INSTALLED IN ACCORDANCE WITH NYSDOT STANDARD SPECIFICATION **SECTION 609**.
2. PRECAST CONCRETE CURB MAY BE SUBSTITUTED, WHEN ALTERNATE CONSTRUCTION DETAILS ARE SUBMITTED BY THE CONTRACTOR AND APPROVED BY THE ENGINEER. ALTERNATE CURB SHALL BE INSTALLED IN ACCORDANCE WITH NYSDOT SPEC **SECTION 609**.

© 8 **CAST IN PLACE CONCRETE CURB AT SIDEWALK**
SCALE: NOT TO SCALE

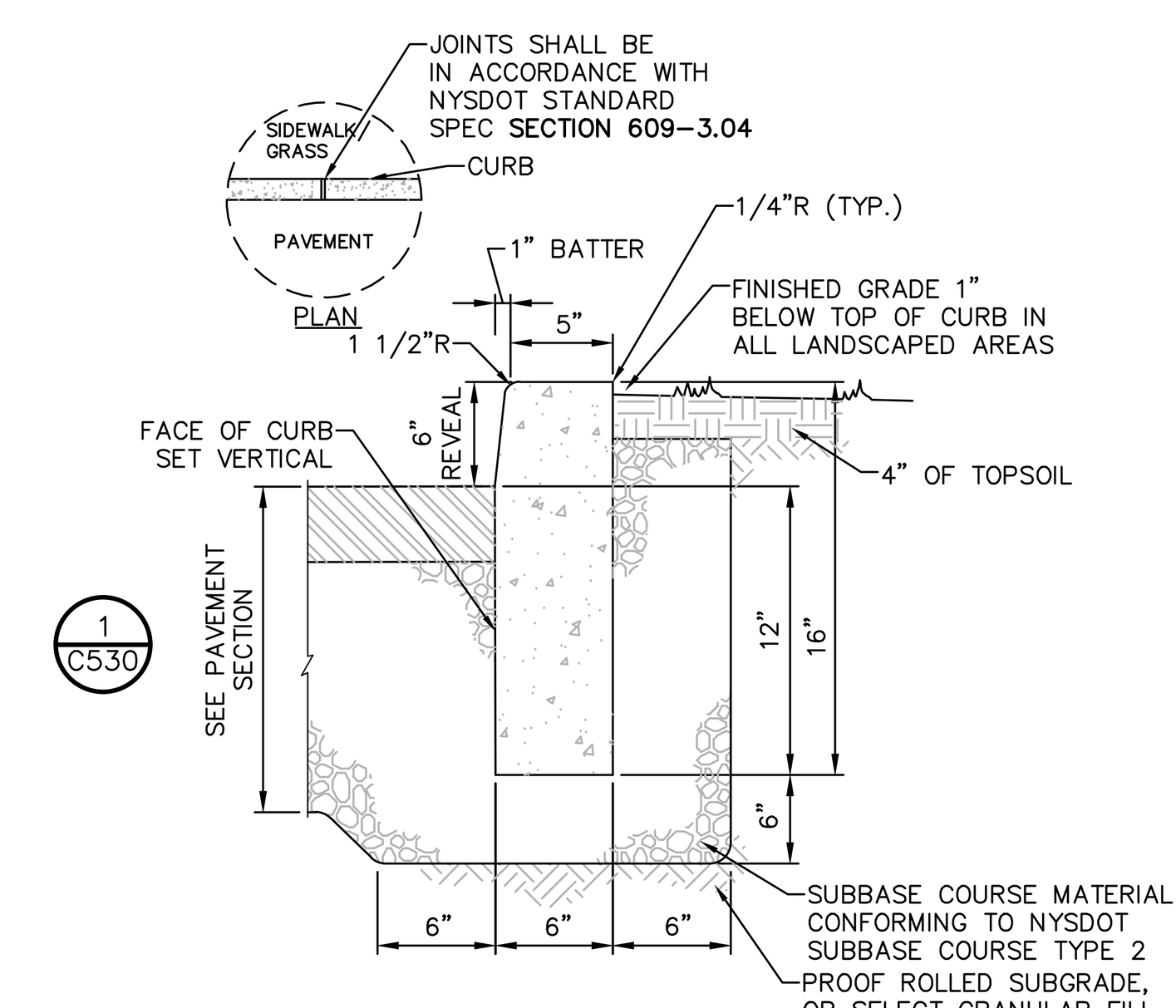

NOTES:
1. CONCRETE CURB SHALL BE INSTALLED IN ACCORDANCE WITH NYSDOT STANDARD SPECIFICATION **SECTION 609.**
2. PRECAST CONCRETE CURB MAY BE SUBSTITUTED, WHEN ALTERNATE CONSTRUCTION DETAILS ARE SUBMITTED BY THE CONTRACTOR AND APPROVED BY THE ENGINEER. ALTERNATE CURB SHALL BE INSTALLED IN ACCORDANCE WITH NYSDOT SPEC **SECTION 609**.

© 9 **CAST IN PLACE CONCRETE CURB**
SCALE: NOT TO SCALE

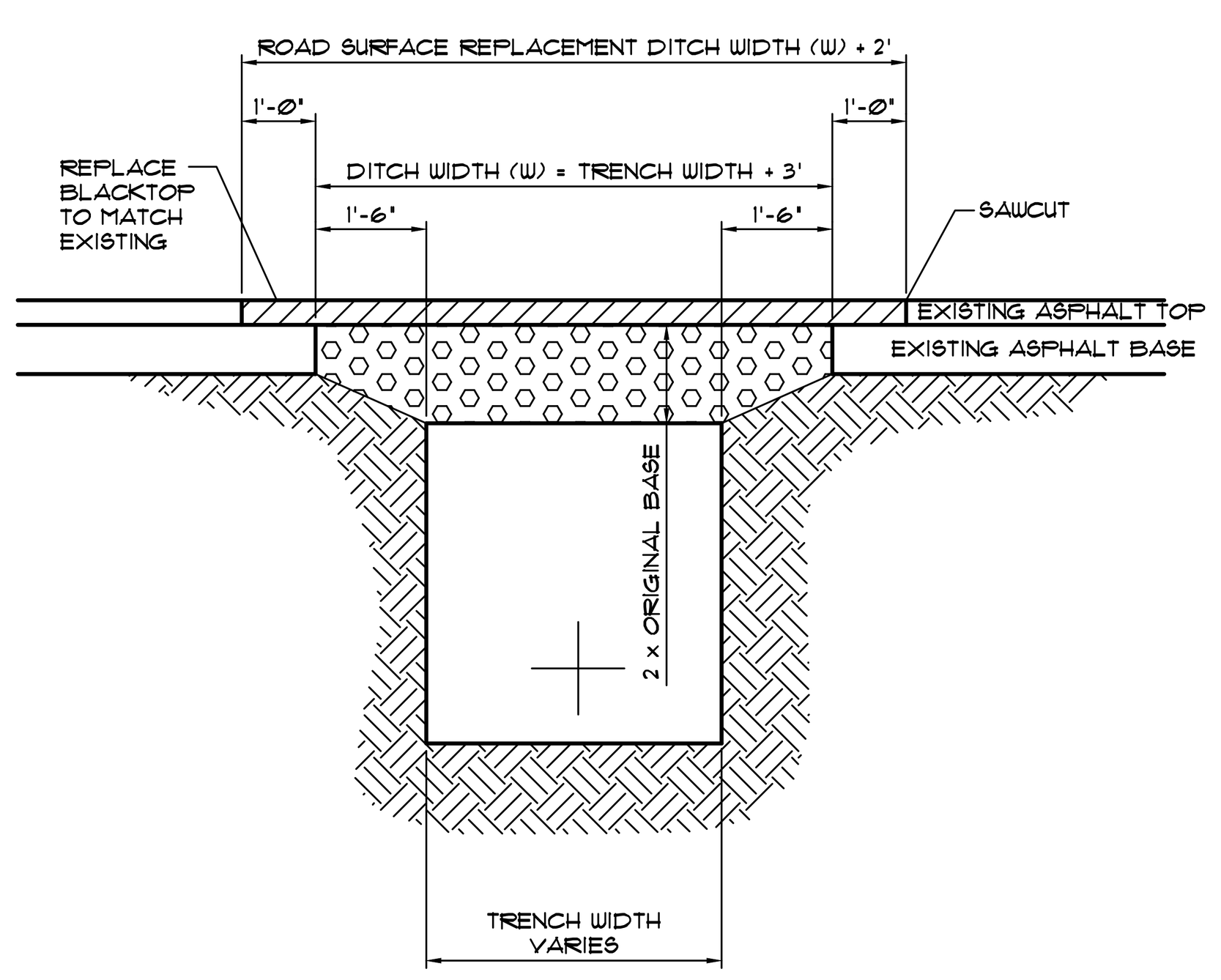

© 10 **CITY OF POUGHKEEPSIE FLEXIBLE PAVEMENT DETAIL AND TRENCHING LIMITS**
SCALE: NOT TO SCALE

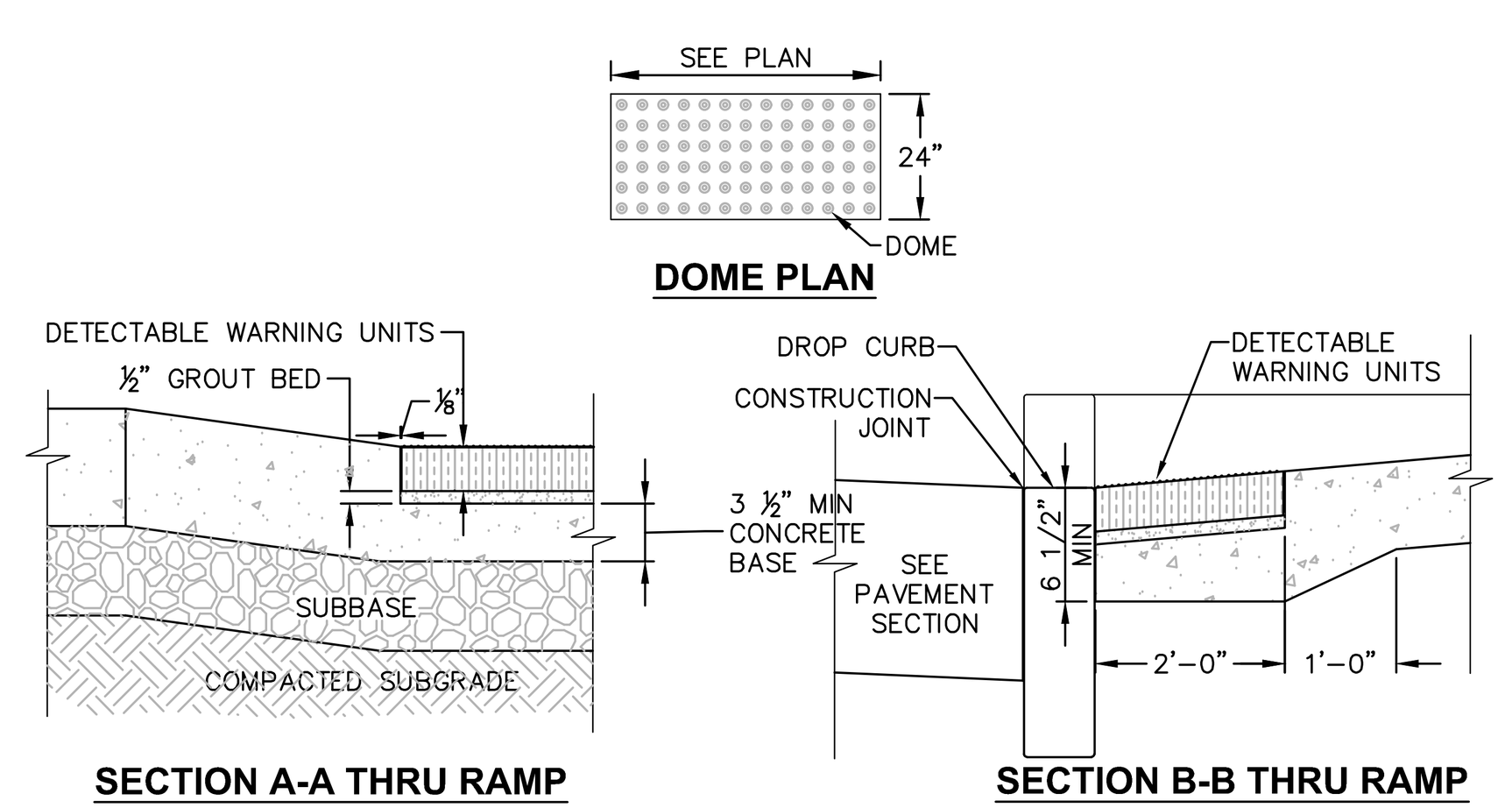

NOTES:
1. COORDINATE W/ OWNER FOR COLOR.
2. DETECTABLE WARNING UNIT SHALL BE ADA COMPLIANT, AND SHALL CONTRAST VISUALLY WITH ADJOINING SURFACES.
3. MATERIALS: UNIT SHALL BE 24-INCH DETECTABLE WARNING ADA PAVERS, DOME STRAIGHT ROW SPACING PATTERN ADA-2 OR ADA-3, ADA COMPLIANT WARNING PAVER AS MANUFACTURED BY WAUSAU TILE OR CAST IRON, CAST IN PLACE ADA COMPLIANT WARNING PLATE A MANUFACTURED BY TUFTILE OR EQUAL.

ALTERNATIVE NOTE 3: SEE SPECIFICATION SECTION 3XXXXXX FOR DETECTABLE WARNING ADA PAVERS.

© 11 **DETECTABLE WARNING UNITS FOR RAMPS**
SCALE: NOT TO SCALE

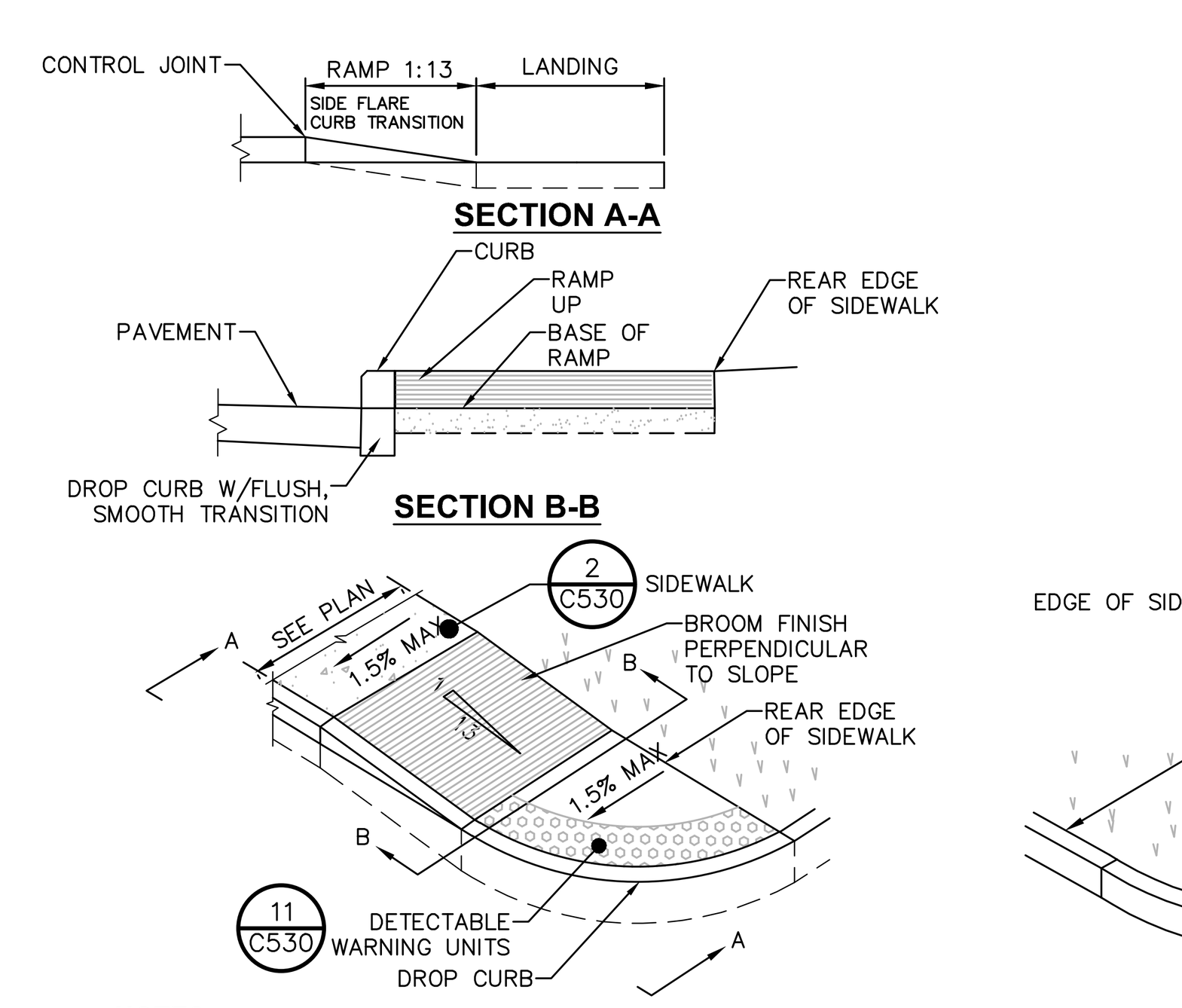

NOTES:
1. ALL WORK SHALL CONFORM WITH THE NYSDOT STANDARD SPECIFICATION FOR CONSTRUCTION AND MATERIALS DATED, **"CURRENT VERSION"**, AND ALL ADDENDA THERE TO; SPECIFICALLY **SECTION 608**– SIDEWALKS, DRIVEWAYS, AND BICYCLE PATHS.
2. SLOPE RAMP AND SIDE FLARES AS INDICATED IN THE PLANS OR AS ORDERED BY THE ENGINEER.
3. DETECTABLE WARNING UNITS SHALL BE PROVIDED ON ALL RAMPS IN ACCORDANCE W/ ADA REQUIREMENTS.

© 12 **PEDESTRIAN RAMP SECTION - DROP CURB**
SCALE: NOT TO SCALE

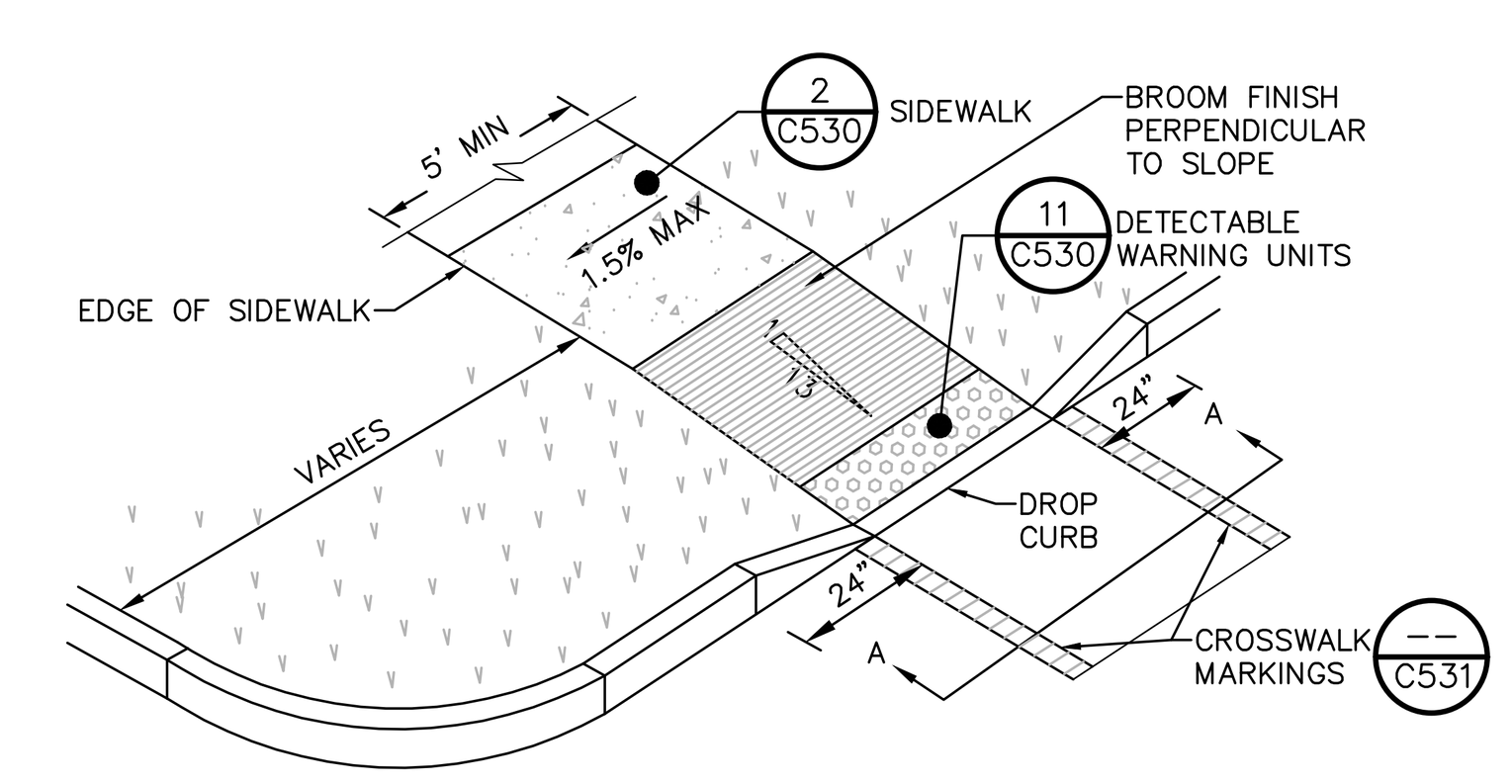

NOTES:
1. ALL WORK SHALL CONFORM WITH THE NYSDOT STANDARD SPECIFICATION FOR CONSTRUCTION AND MATERIALS DATED, **"CURRENT VERSION"**, AND ALL ADDENDA THERE TO; SPECIFICALLY **SECTION 608**– SIDEWALKS, DRIVEWAYS, AND BICYCLE PATHS.
2. SLOPE RAMP AND SIDE FLARES AS INDICATED IN THE PLANS OR AS ORDERED BY THE ENGINEER.
3. DETECTABLE WARNING UNITS SHALL BE PROVIDED ON ALL RAMPS IN ACCORDANCE W/ ADA REQUIREMENTS.

© 13 **PEDESTRIAN RAMP SECTION - DROP CURB**
SCALE: NOT TO SCALE

LaBella
Powered by partnership.

21 Fox Street
Poughkeepsie, NY 12601
845-454-3980
labellapc.com

NOT FOR CONSTRUCTION

EXP: ##/##/20## EXP: ##/##/20##

CERTIFICATE OF AUTHORIZATION NUMBER:
PROFESSIONAL ENGINEERING: 0021272
LAND SURVEYING: 0021271
GEOLOGICAL: 0021659

It is a violation of New York Education Law Art. 145 Sec. 7209 & Art. 147 Sec. 7307, for any person, unless acting under the direction of a licensed architect, professional engineer, or land surveyor, to alter an item in any way. If an item bearing the seal of an architect, engineer, or land surveyor is altered; the altering architect, engineer, or land surveyor shall affix to the item their seal and notation "altered by" followed by their signature and date of such alteration, and a specific description of the alteration.

© 2025 LaBella Associates

MASELO REALTY LLC
18 EASTVIEW ROAD
MONSEY, NY 10952

HIGHVIEW AT THE FALLKILL CREEK
CITY OF POUGHKEEPSIE
DUTCHESS COUNTY, NEW YORK

NO:	DATE:	DESCRIPTION:
Revisions		

PROJECT NUMBER: CZ81947.00
DRAWN BY: JRR
REVIEWED BY: KGA
ISSUED FOR: PLANNING BOARD REVIEW
DATE: 10/28/2025
DRAWING NAME:

SITE DETAILS 1

DRAWING NUMBER:

C530

Drawing Name: B:\GLOBAL\Legacy\Chazen\Projects\81900-81999\81947.00 - Highview II\DWG\01_C530-C531_81747-00_SITED.dwg
Xref's Attached: X-BORDER_81947-00_30x42
Date Printed: Oct 27, 2025, 4:25pm

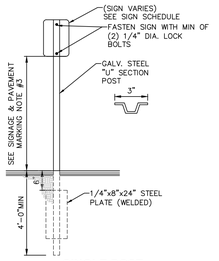

1 **SINGLE POST SIGN MOUNTING DETAIL**
SCALE: NOT TO SCALE

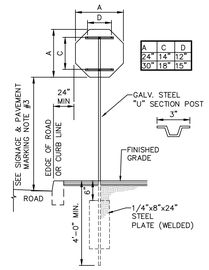

2 **SINGLE POST STOP SIGN MOUNTING DETAIL**
SCALE: NOT TO SCALE

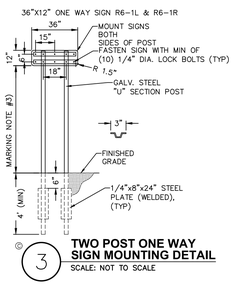

3 **TWO POST ONE WAY SIGN MOUNTING DETAIL**
SCALE: NOT TO SCALE

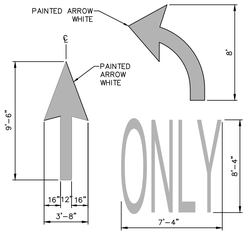

4 **PAVEMENT MARKING DETAIL DIRECTIONAL ARROW**
SCALE: NOT TO SCALE

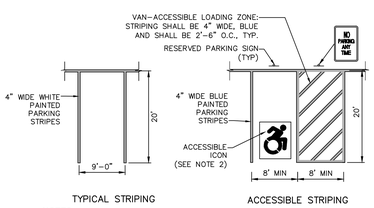

NOTES:
1. ALL DIMENSIONS SHALL BE IN ACCORDANCE WITH ADA STANDARD AND CURRENT ZONING AND SITE REGULATIONS.
2. PAINTED ACCESSIBLE LOGO TO BE IN ACCORDANCE W/ NEW YORK STATE LAW.
3. SLOPE OF PAVEMENT SURFACE IN ACCESSIBLE PARKING AREA SHALL NOT EXCEED 1.5% IN ANY DIRECTION.
4. SEE PLAN FOR ACTUAL LOCATION OF SIGNAGE

5 **PAVEMENT MARKING DETAIL PARKING STRIPING**
SCALE: NOT TO SCALE

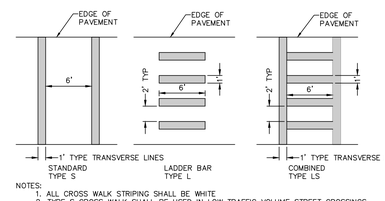

NOTES:
1. ALL CROSS WALK STRIPING SHALL BE WHITE
2. TYPE S CROSS WALK SHALL BE USED IN LOW TRAFFIC VOLUME STREET CROSSINGS.
3. TYPE L CROSS WALK SHALL BE USED IN MEDIUM TRAFFIC VOLUME STREET CROSSINGS.
4. TYPE LS CROSS WALK SHALL BE USED IN HIGH TRAFFIC VOLUME STREET CROSSINGS.

6 **PAVEMENT MARKING DETAIL CROSS WALK STRIPING**
SCALE: NOT TO SCALE

STRIPING NOTES:
1. ALL STRIPING SHALL CONFORM TO THE LATEST EDITION OF THE NYSDOT STANDARD SPECIFICATIONS, **SECTION 640** AND THE "NATIONAL MANUAL ON UNIFORM TRAFFIC CONTROL DEVICES" – **2009 EDITION** AND THE "NYS SUPPLEMENT."
2. STRIPE PAVEMENT AS INDICATED ON THE PLANS AND/OR IN ACCORDANCE WITH ALL APPLICABLE LOCAL, STATE AND FEDERAL REQUIREMENTS.
3. STRIPING WORK WILL BE REVIEWED AND ACCEPTED BY THE AUTHORITY HAVING JURISDICTION.
4. COLOR: DRIVE LANE DIVIDERS – WHITE OR AOBE
   NO PARKING ZONE MARKINGS – WHITE OR AOBE
   PARKING DIVIDERS – WHITE OR AOBE
   WALKING LINES – WHITE OR AOBE
   ACCESSIBLE PARKING LINES & SYMBOL – BLUE

SIGNAGE NOTES:
1. ALL SIGNS SHALL CONFORM TO THE LATEST EDITION OF THE NYSDOT STANDARD SPECIFICATIONS, **SECTION 645** AND THE "NATIONAL MANUAL ON UNIFORM TRAFFIC CONTROL DEVICES" – **2009 EDITION** AND THE "NYS SUPPLEMENT."
2. SIGN MOUNTING HEIGHT SHALL BE A MINIMUM OF 7', MINIMUM MOUNTING HEIGHT MAY BE ADJUSTED ONLY IN ACCORDANCE WITH PROVISIONS OUTLINED IN THE "NATIONAL MANUAL ON UNIFORM TRAFFIC CONTROL DEVICES" – **2009 EDITION** AND THE "NYS SUPPLEMENT."
3. SIGN POST SHALL BE IN ACCORDANCE W/ NYSDOT STANDARD SPECS **SECTION 730.**

MUTCD SIGN SCHEDULE

SIGN NO.	SIGN FACE	MUTCD NUMBER	MIN. SIZE	COLORS BCK GRND	COLORS LEGEND	MOUNTING
1	STOP	R1-1	30"x30"	RED	WHITE	2 C5.31
4	ONE WAY	R6-1L	36"x12"	BLACK	WHITE	3 C5.31
5	ONE WAY	R6-1R	36"x12"	BLACK	WHITE	3 C5.31
6		W11-2	24"x24"	YELLOW/ FYG	BLACK	1 C5.31
7		W16-7P	24"x12"	YELLOW/ FYG	BLACK	1 C5.31
9	DO NOT ENTER	R5-1	30"x30"	RED	WHITE	1 C5.31
10	RESERVED PARKING	NY R7-8D	12"x18"	WHITE/ BLUE	GREEN/ WHITE	1 C5.31
11	VAN ACCESSIBLE	R7-8P	12"x6"	WHITE	BLUE	1 C5.31
12	NO PARKING ANY TIME	R7-1	12"x18"	WHITE	RED	1 C5.31

7 **MUTCD SIGN SCHEDULE**
SCALE: NOT TO SCALE

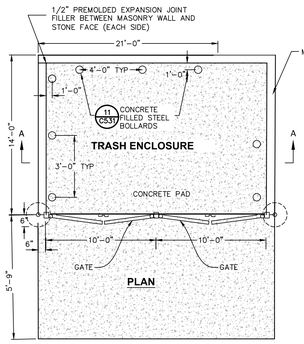

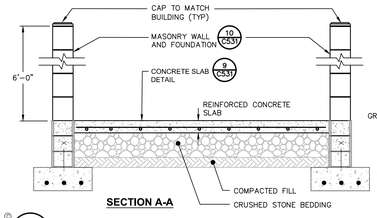

SECTION A-A

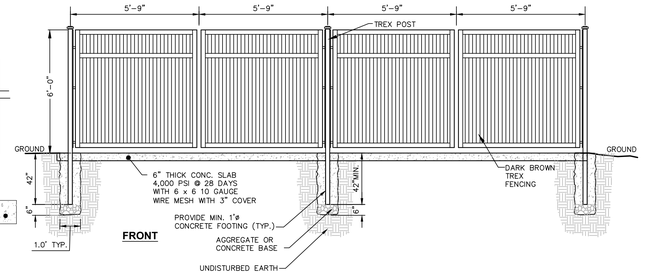

FRONT

8 **REFUSE ENCLOSURE**
SCALE: NOT TO SCALE

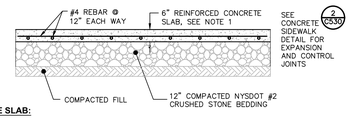

CONCRETE SLAB:
1. MATERIAL AND METHODS OF CONSTRUCTION SHALL BE IN CONFORMANCE WITH THE NEW YORK STATE DEPARTMENT OF TRANSPORTATION (NYSDOT) STANDARD SPECIFICATIONS FOR CONSTRUCTION AND MATERIALS, DATED MAY 1, 2008, AND ALL ADDENDA THERETO.
2. CONCRETE SHALL HAVE A MINIMUM COMPRESSION STRENGTH OF 4500 PSI @ 28 DAY AND SHALL BE PLACED IN ACCORDANCE WITH ACI SPECIFICATIONS AND ITS LATEST REVISION.
3. REINFORCING STEEL FOR CONCRETE SHALL CONFORM WITH SECTION 556 – REINFORCING STEEL FOR CONCRETE STRUCTURES OF THE ABOVE REFERENCED NYSDOT STANDARD SPECIFICATIONS AND AS SPECIFICALLY CALLED OUT IN THE DRAWINGS.
4. ALL EXPOSED SURFACED SHALL HAVE A BROOM TEXTURED FINISH & TOOLED EDGES. TOOL SHALL BE PROVIDE MAX 1–1/2" WIDE SMOOTH TROWEL FINISH AT JOINT.
5. EXPANSION JOINTS SHALL BE LOCATED A MAXIMUM OF 20' ON CENTER, OR AS INDICATED ON PLANS.
6. CONTROL JOINTS SHALL BE LOCATED A MAXIMUM OF 5' ON CENTER, OR AS INDICATED ON PLANS.
7. JOINTS SHALL NOT BE SAW CUT.
8. EXPOSED CONCRETE SURFACES SHALL BE TREATED WITH "SUREBOND"/"SAFEBOND" SB–7000 INTENSIFIER BRIGHT PROTECTOR AND SIDEWALK SEALER, OR EQUAL. RATE AND METHOD OF APPLICATION SHALL BE IN ACCORDANCE WITH MANUFACTURER'S RECOMMENDATIONS.
9. SUBBASE MATERIAL SHALL CONFORM WITH SECTION 304 OF THE ABOVE REFERENCED NYSDOT STANDARD.
10. WHERE IT IS NECESSARY TO PLACE FILL FOR PURPOSE OF BRINGING THE SUBGRADE ELEVATION UP TO A SPECIFIED GRADE, THE FILL MATERIAL PLACED SHALL BE IN ACCORDANCE WITH SECTION 203–EXCAVATION AND EMBANKMENT OF THE ABOVE REFERENCED NYSDOT STANDARD SPECIFICATIONS.

9 **CONCRETE SLAB**
SCALE: NOT TO SCALE

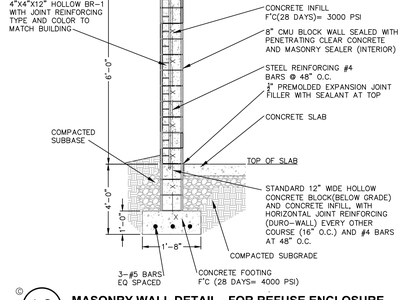

10 **MASONRY WALL DETAIL - FOR REFUSE ENCLOSURE**
SCALE: NOT TO SCALE

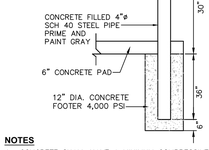

NOTES
1. CONCRETE SHALL HAVE A MINIMUM COMPRESSIVE STRENGTH OF 4,000 PSI AT 28 DAYS WITH A MINIMUM CEMENT CONTENT OF 600 POUNDS PER CUBIC YARD FOR ALL FOOTINGS.
2. ALL CONCRETE SHALL HAVE A SLUMP OF NO GREATER THAN 3"–5" TO WITHIN A TOLERANCE OF 0"–1".
3. ALL EXPOSED CONCRETE SHALL BE 5% AIR–ENTRAINED (WITHIN 1% TOLERANCES) CONFORMING TO ASTM C260.
4. ALL FORMWORK AND PLACEMENT OF CONCRETE SHALL COMPLY WITH GOOD CONSTRUCTION PRACTICES AND BE IN ACCORDANCE WITH GOVERNING CODES, AND REGULATIONS.

11 **BOLLARD DETAIL - FOR REFUSE ENCLOSURE**
SCALE: NOT TO SCALE

LaBella Powered by partnership.
21 Fox Street
Poughkeepsie, NY 12601
845-454-3980
labellapc.com

NOT FOR CONSTRUCTION
EXP. ##/##/20##
EXP. ##/##/20##

CERTIFICATE OF AUTHORIZATION NUMBER:
PROFESSIONAL ENGINEERING: 0021272
LAND SURVEYING: 0021271
GEOLOGICAL: 0021659

It is a violation of New York Education Law Art. 145 Sec. 7209 & Art. 147 Sec. 7307, for any person, unless acting under the direction of a licensed architect, professional engineer, or land surveyor, to alter an item in any way. If an item bearing the seal of an architect, engineer, or land surveyor is altered; the altering architect, engineer, or land surveyor shall affix to the item their seal and notation "altered by" followed by their signature and date of such alteration, and a specific description of the alteration.

© 2025 LaBella Associates

MASELO REALTY LLC
18 EASTVIEW ROAD
MONSEY, NY 10952

HIGHVIEW AT THE FALLKILL CREEK
CITY OF POUGHKEEPSIE
DUTCHESS COUNTY, NEW YORK

NO:	DATE:	DESCRIPTION:
Revisions		

PROJECT NUMBER: CZ81947.00
DRAWN BY: JRR
REVIEWED BY: KGA
ISSUED FOR: PLANNING BOARD REVIEW
DATE: 10/28/2025
DRAWING NAME:

SITE DETAILS 2

DRAWING NUMBER:

C531

Drawing Name: B:\GLOBAL\Legacy\Chazen\Projects\81900-81999\81947.00 - Highview II\DWG\01_CSD\C531_81747-00_SITED.dwg
Xref's Attached: X-BORDER_81H1-00_3in42
Date Plotted: 10/27/2025, 4:05pm

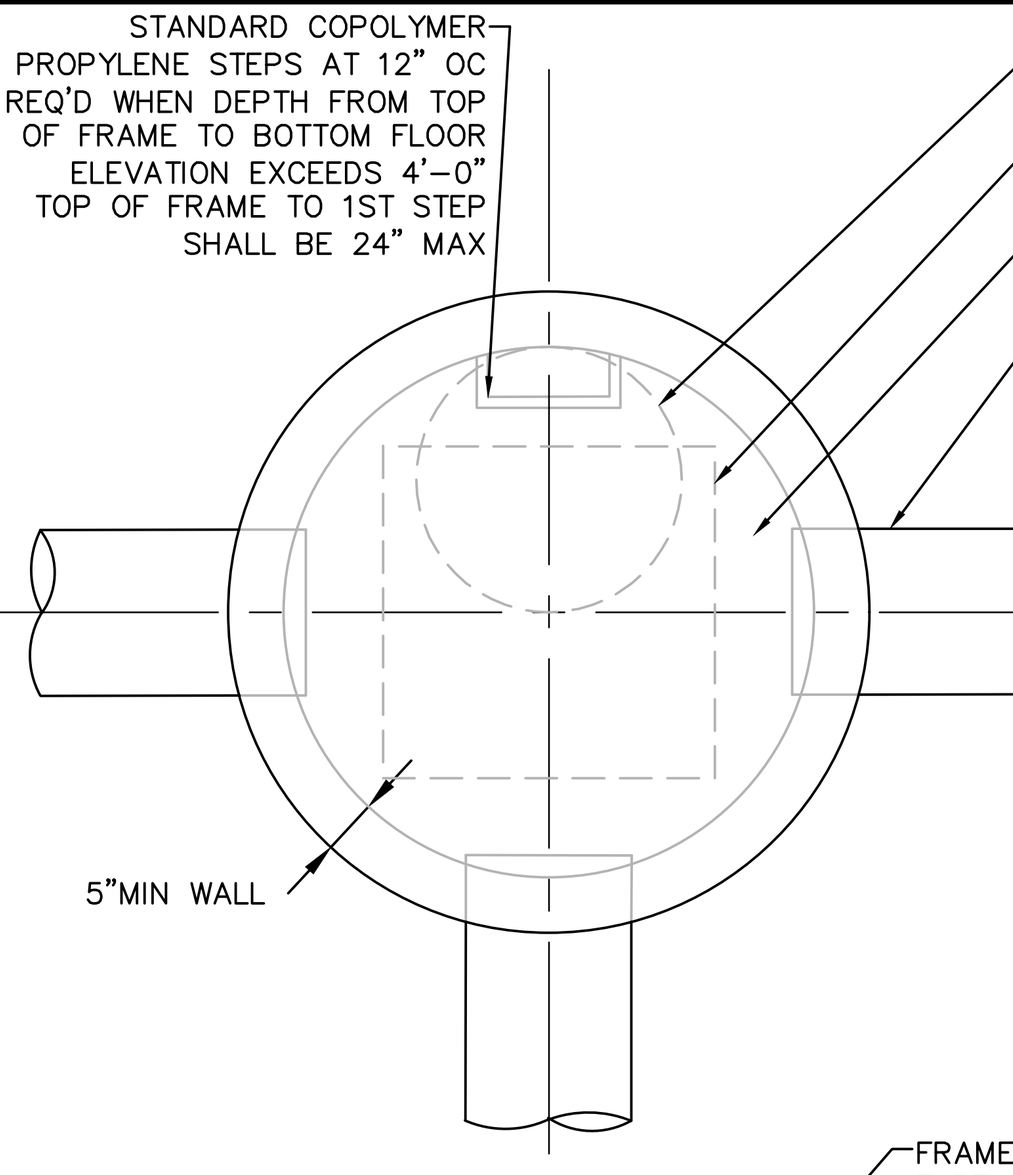

NOTE:
PRECAST LID TO BE DESIGNED TO WITHSTAND MAX AASHTO HS20-44 TRUCK LOADINGS & 25% IMPACT

MANHOLES:
EJ GROUP
SOLID COVER PN# 00120329
8" THK FRAME PN#00120715
OR APPROVED EQUAL. COVER MUST BE CLEARLY LABELED "STORM SEWER"
LOCATE MANHOLE COVER OPENING DIRECTLY OVER MANHOLE STEPS

CATCH BASINS:
EJ GROUP – 5419M/Z ASSEMBLY
GRATE PN#00541931
4 1/2" THK FRAME PN#00541911
OR APPROVED EQUAL
LOCATE OPENING FOR FRAME AND GRATE IN CENTER OF PRECAST LID

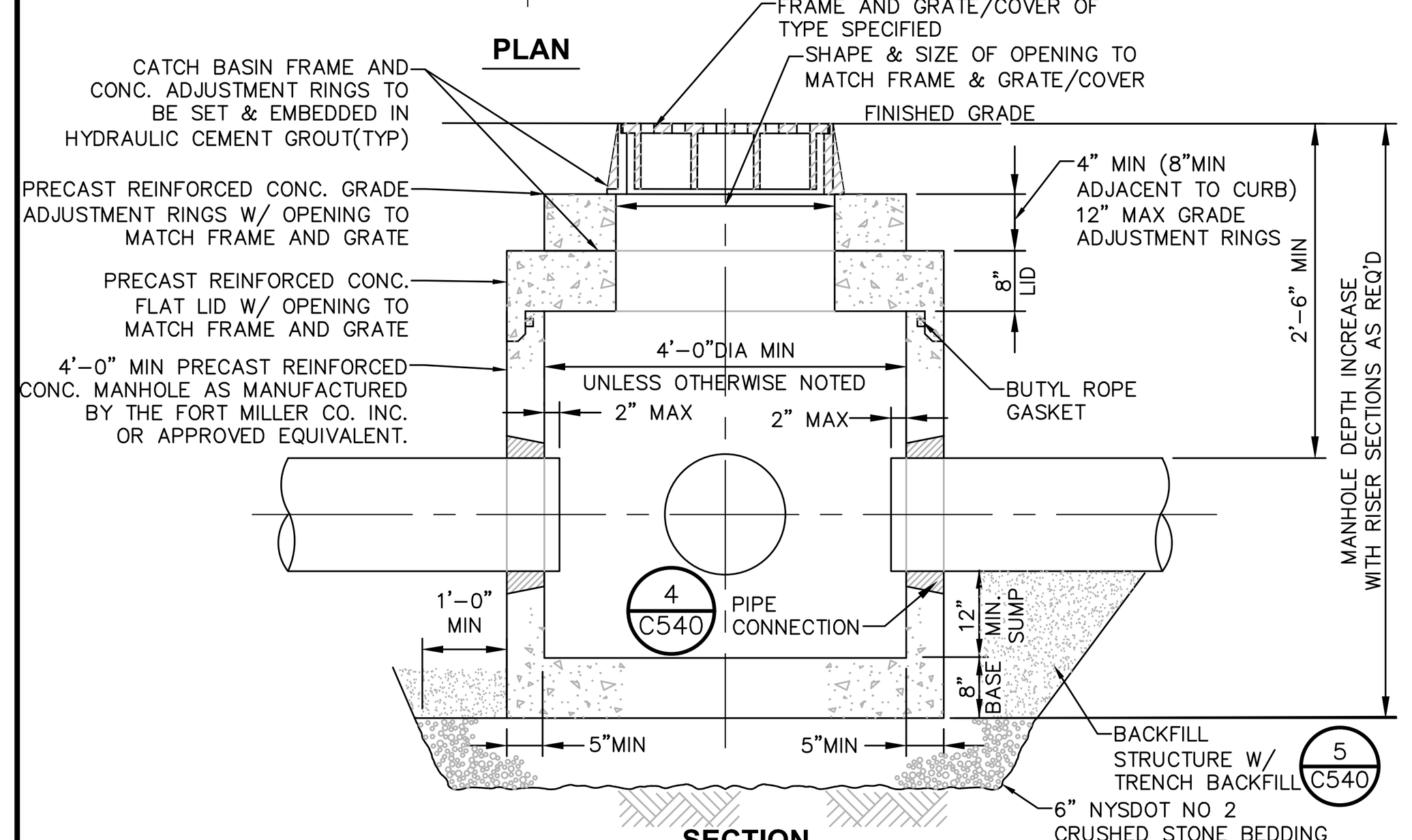

NOTES:
1. CATCH BASIN SHALL BE PRECAST CONCRETE. DESIGNED FOR HS20-44 VEHICULAR LOADING AND 25% IMPACT.
2. FRAME AND COVER SHALL BE DESIGNED FOR HS20-44 VEHICULAR LOADING & 25% IMPACT.
3. CONCRETE CATCH BASIN LID CLEAR OPENING DIMENSION MUST MATCH FRAME AND GRATE CLEAR OPENING DIMENSION.
4. CATCH BASINS HAVING A DEPTH GREATER THAN 48" FROM FINISHED SURFACE TO THE FLOOR OF THE CONCRETE BASE SHALL BE PROVIDED WITH STEPS.
5. BACKFILL USING TRENCH BACKFILL, COMPACTED IN 6" LIFTS.
6. SUMPS FOR CATCH BASINS SHALL BE 12".
7. ECCENTRIC CONE TOP CAN BE USED FOR MANHOLES DEPTH GREATER THAN 7 FEET.
8. SEE CHART FOR REQUIRED MANHOLES / CATCH BASINS DIAMETERS.
9. ALL PRECAST CONSTRUCTION IN ACCORDANCE W/ASTM C478

© 1 **PRECAST CONCRETE CATCH BASIN/MANHOLE DETAIL**
SCALE: NOT TO SCALE

ACCEPTABLE MANHOLE STEPS

MANUFACTURER	PATTERN NUMBER	"A" STEP WIDTH	"B" LEG LENGTH	"C" RUNG CLEAR	"D" EMBED-MENT	"E" RUNG CLEAR
M.A. INDUSTRIES INC*	PS2-PF	14 3/4	9 1/4	13 3/4	3 3/8	5 7/8
M.A. INDUSTRIES INC*	PS2-PFS	14 3/4	8 1/4	13 3/4	3 3/8	4 7/8

* OR EQUIVALENT
MH STEP DESIGN AND INSTALLATION SHALL COMPLY WITH ALL OSHA REGULATIONS

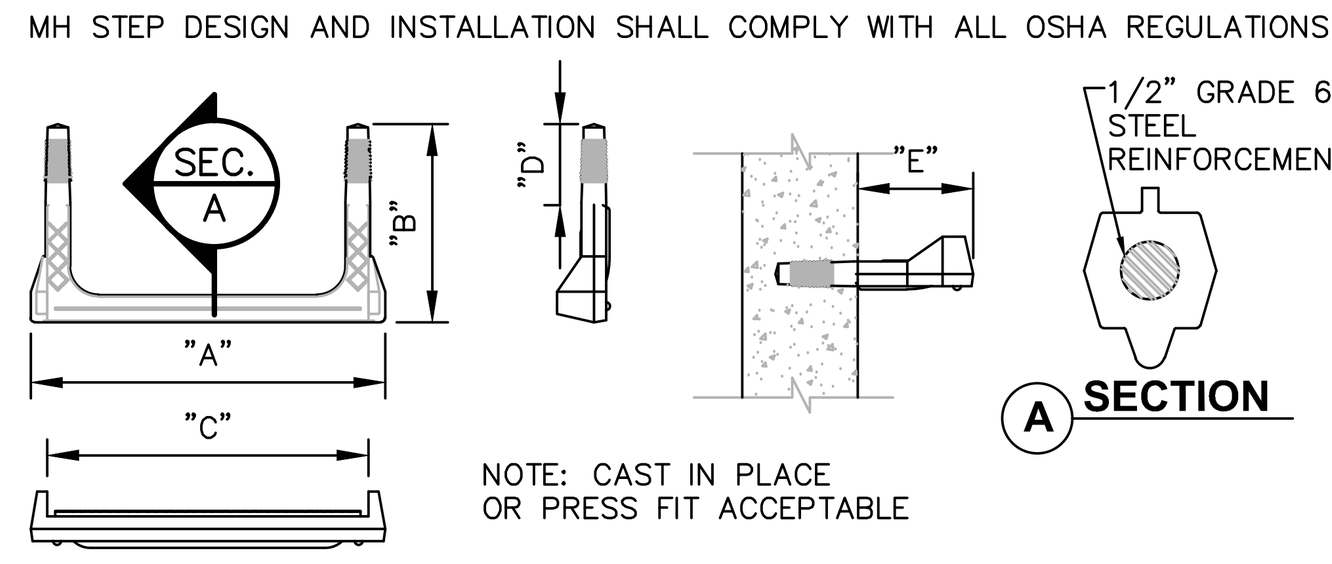

© 2 **COPOLYMER POLYPROPYLENE MH STEP**
SCALE: NOT TO SCALE

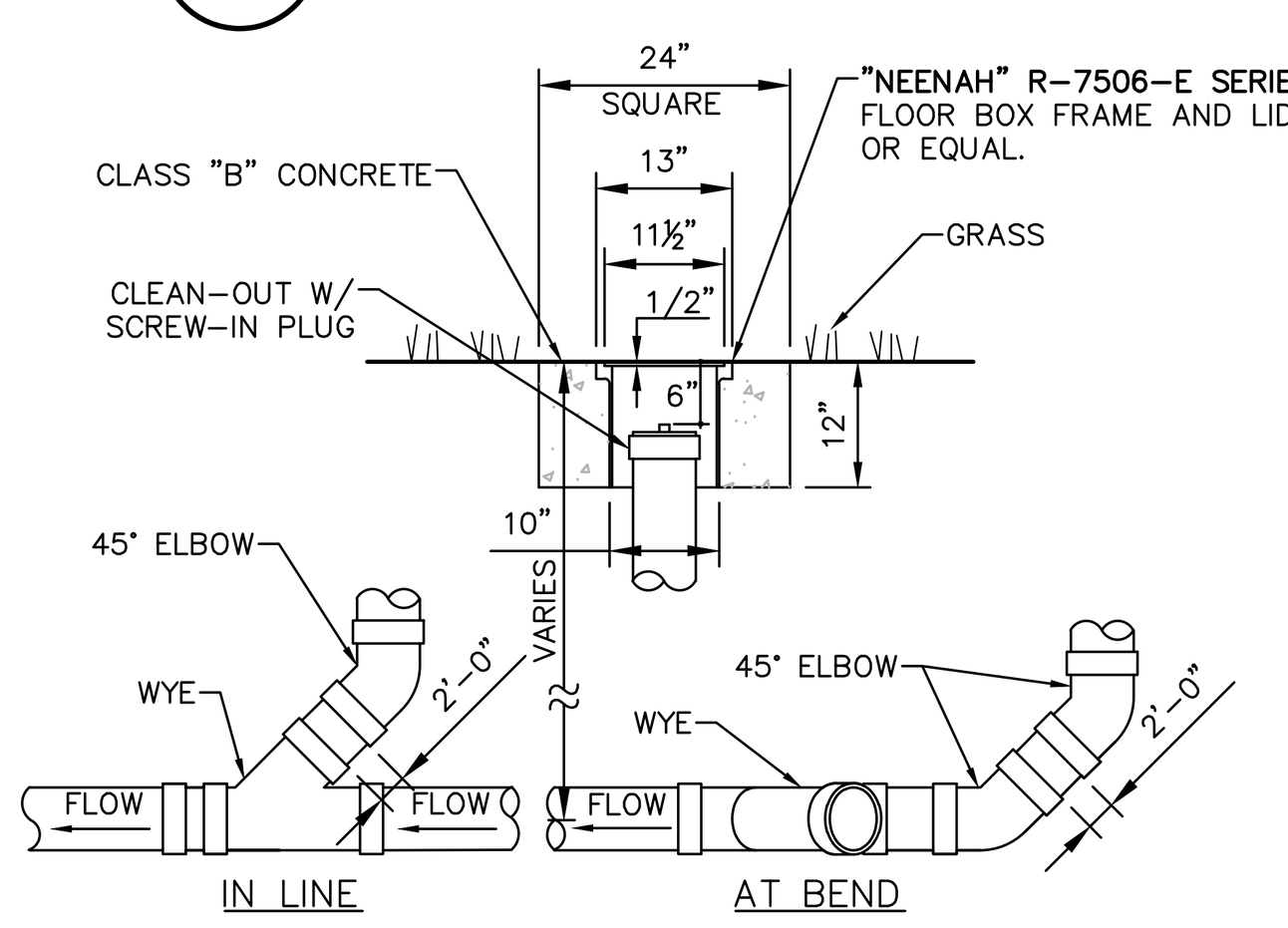

NOTES:
1. SEWER PIPE FITTINGS TO BE ASTM D-3033 OR D-3034 SDR-35.
2. TO BE USED FOR GRAVITY PORTION OF SANITARY SYSTEM AS WELL AS THE STORM ROOF DRAINAGE SYSTEM.

© 3 **CLEAN OUT - NON TRAFFIC AREAS**
SCALE: NOT TO SCALE

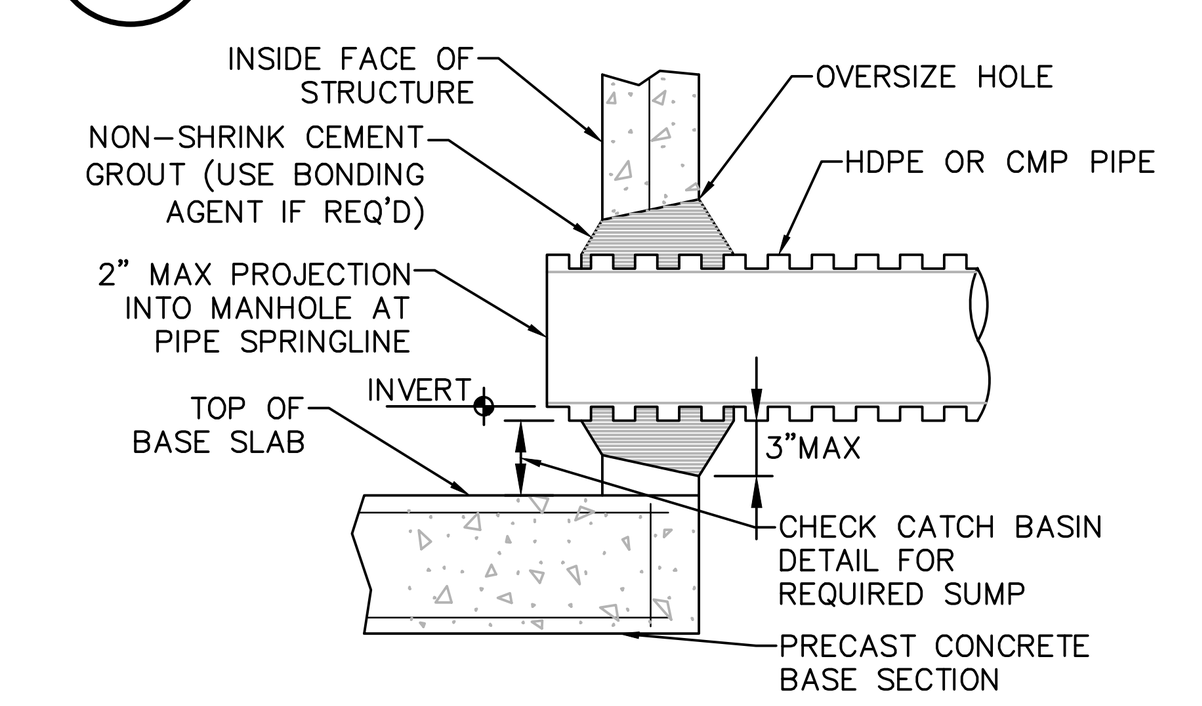

© 4 **PIPE CONNECTION TO DRAINAGE STRUCTURE-CMP OR HDPE CEMENT GROUT SEAL JOINT**
SCALE: NOT TO SCALE

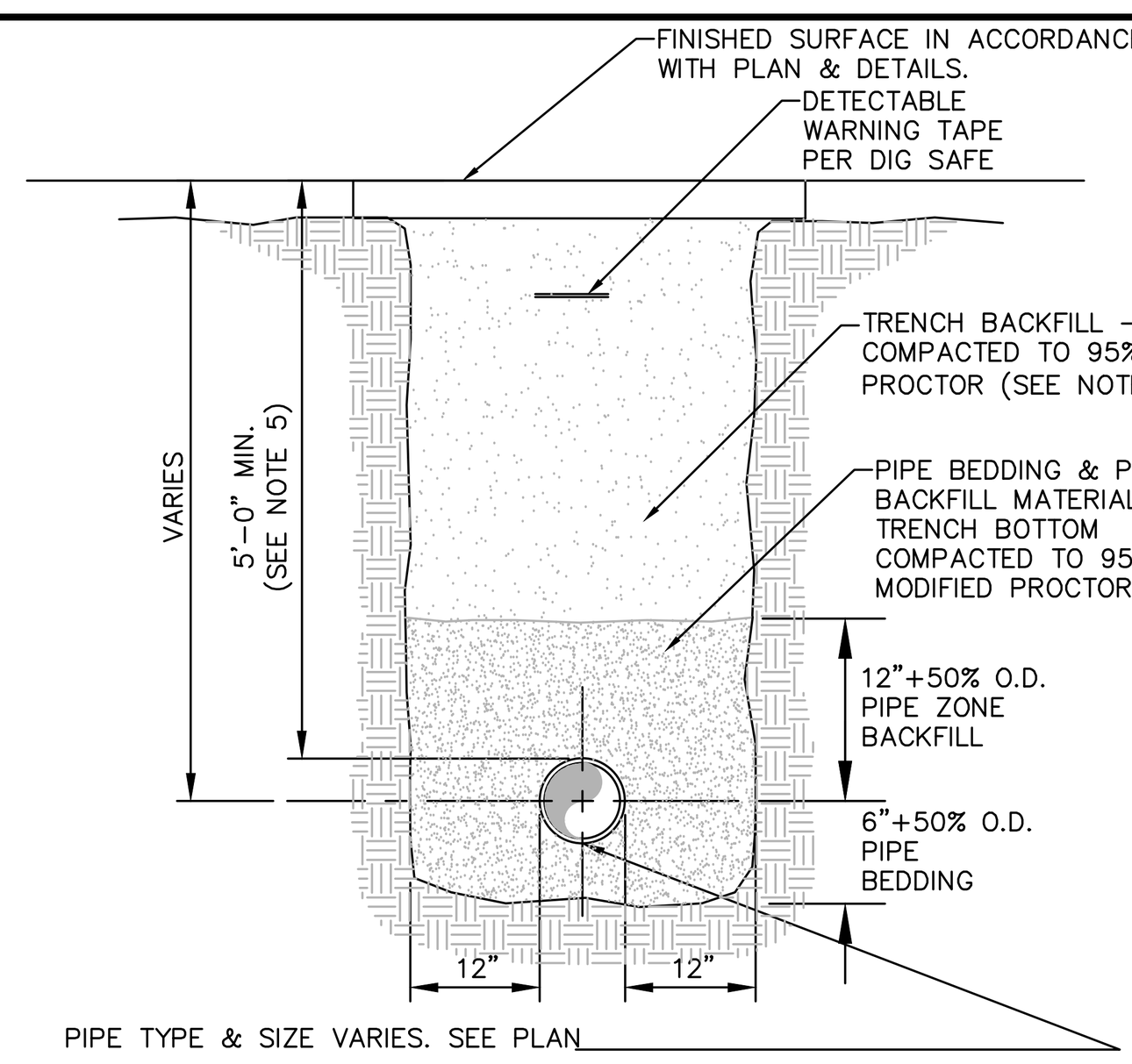

NOTES:
1. PIPE BEDDING & PIPE ZONE BACKFILL SHALL BE A NATURAL RUN-OF-BANK (R.O.B.) SAND OR A MIXTURE OF CRUSHED STONE AND GRAVEL, FREE OF SOFT, NONDURABLE PARTICLES, ORGANIC MATERIALS AND ELONGATED PARTICLES, AND SHALL BE WELL GRADED FROM FINE TO COARSE PARTICLES. BEDDING GRADATIONS SHALL BE APPROVED BY THE ENGINEER AND SHALL MEET THE FOLLOWING GRADATION REQUIREMENTS:

SIEVE DESIGNATION	% PASSING
3/4"	100%
NO. 40	0–70%
NO. 200	0–10%

2. TRENCH BACKFILL SHALL BE A NATURAL RUN-OF-BANK (R.O.B.) OR PROCESSED GRAVEL, OR EXCAVATED MATERIAL FREE OF SOFT, NONDURABLE PARTICLES, ORGANIC MATERIALS AND ELONGATED PARTICLES, AND SHALL BE WELL GRADED FROM FINE TO COARSE PARTICLES. TRENCH BACKFILL GRADATIONS SHALL BE APPROVED BY THE ENGINEER AND SHALL MEET THE FOLLOWING GRADATION REQUIREMENTS:

SIEVE DESIGNATION	% PASSING
4"	100%
NO. 40	0–70%
NO. 200	0–10%

IN NON-TRAFFIC UNPAVED AREAS TRENCH BACKFILL CAN BE MATERIALS EXCAVATED FROM THE TRENCH AS APPROVED BY THE ENGINEER AND COMPACTED TO 90% MODIFIED PROCTOR.

3. INSTALL CONTINUOUS DETECTABLE MARKING TAPE DURING BACKFILLING OF TRENCH FOR UNDERGROUND PIPING. LOCATE TAPE 12" BELOW FINISHED GRADE, DIRECTLY OVER PIPING, EXCEPT 6" BELOW SUBGRADE UNDER PAVEMENTS & SLAB.
4. TRENCHING SHALL BE IMPLEMENTED IN ACCORDANCE WITH O.S.H.A. STANDARDS.
5. 5'-0" MIN COVER SHALL BE APPLIED TO WATER MAIN OR SANITARY SEWER FORCE MAINS ONLY.

© 5 **PIPE TRENCH DETAIL (TYPICAL)**
SCALE: NOT TO SCALE

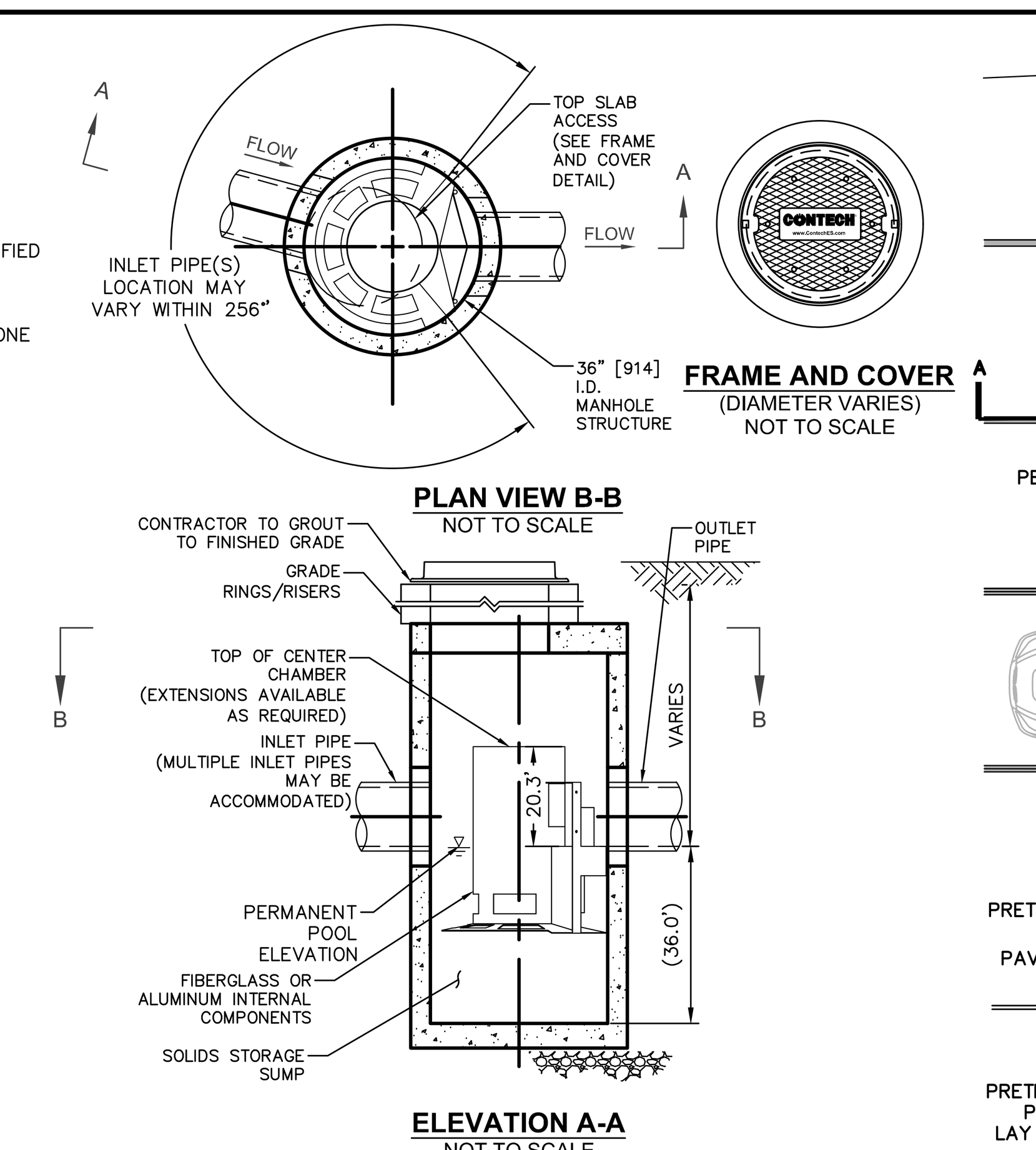

GENERAL NOTES
1. CONTECH TO PROVIDE ALL MATERIALS UNLESS NOTED OTHERWISE.
2. FOR SITE SPECIFIC DRAWINGS WITH DETAILED STRUCTURE DIMENSIONS AND WEIGHT, PLEASE CONTACT YOUR CONTECH ENGINEERED SOLUTIONS LLC REPRESENTATIVE. www.ContechES.com
3. CASCADE SEPARATOR WATER QUALITY STRUCTURE SHALL BE IN ACCORDANCE WITH ALL DESIGN DATA AND INFORMATION CONTAINED IN THIS DRAWING. CONTRACTOR TO CONFIRM STRUCTURE MEETS REQUIREMENTS OF PROJECT.
4. CASCADE SEPARATOR STRUCTURE SHALL MEET AASHTO HS20 LOAD RATING, ASSUMING EARTH COVER OF 0' - 2' [610], AND GROUNDWATER ELEVATION AT, OR BELOW, THE OUTLET PIPE INVERT ELEVATION. ENGINEER OF RECORD TO CONFIRM ACTUAL GROUNDWATER ELEVATION. CASTINGS SHALL MEET AASHTO M306 AND BE CAST WITH THE CONTECH LOGO.
5. CASCADE SEPARATOR STRUCTURE SHALL BE PRECAST CONCRETE CONFORMING TO ASTM C478 AND AASHTO LOAD FACTOR DESIGN METHOD.
6. ALTERNATE UNITS ARE SHOWN IN MILLIMETERS [mm].

INSTALLATION NOTES
A. ANY SUB-BASE, BACKFILL DEPTH, AND/OR ANTI-FLOTATION PROVISIONS ARE SITE-SPECIFIC DESIGN CONSIDERATIONS AND SHALL BE SPECIFIED BY ENGINEER OF RECORD.
B. CONTRACTOR TO PROVIDE EQUIPMENT WITH SUFFICIENT LIFTING AND REACH CAPACITY TO LIFT AND SET THE CASCADE SEPARATOR MANHOLE STRUCTURE.
C. CONTRACTOR TO INSTALL JOINT SEALANT BETWEEN ALL STRUCTURE SECTIONS AND ASSEMBLE STRUCTURE.
D. CONTRACTOR TO PROVIDE, INSTALL, AND GROUT INLET AND OUTLET PIPE(S). MATCH PIPE INVERTS WITH ELEVATIONS SHOWN. ALL PIPE CENTERLINES TO MATCH PIPE OPENING CENTERLINES.
E. CONTRACTOR TO TAKE APPROPRIATE MEASURES TO ASSURE UNIT IS WATER TIGHT, HOLDING WATER TO FLOWLINE INVERT MINIMUM. IT IS SUGGESTED THAT ALL JOINTS BELOW PIPE INVERTS ARE GROUTED.

© 6 **CONTECH CASCADE CS-3 HYDRODYNAMIC SEPARATOR**
SCALE: NOT TO SCALE

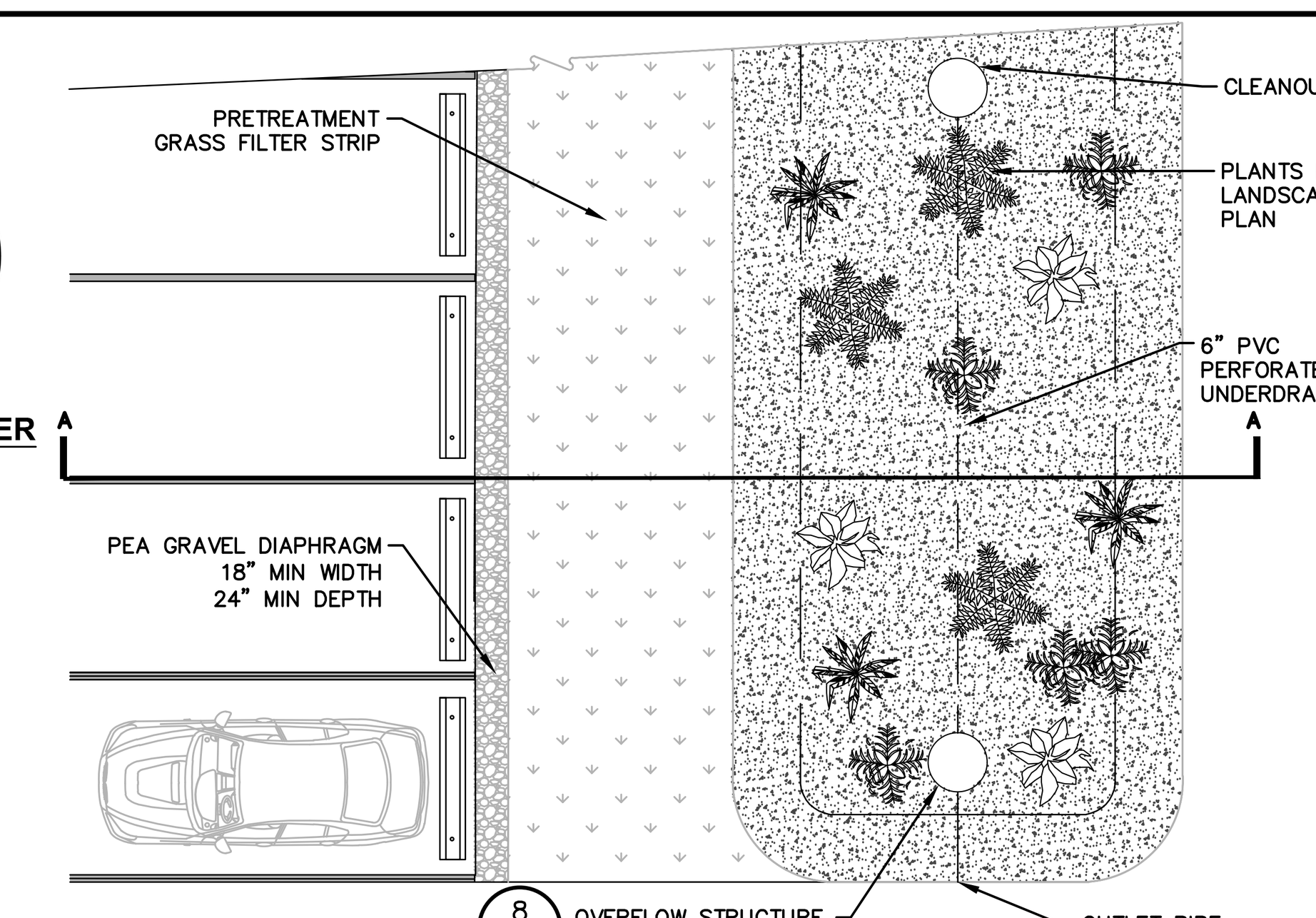

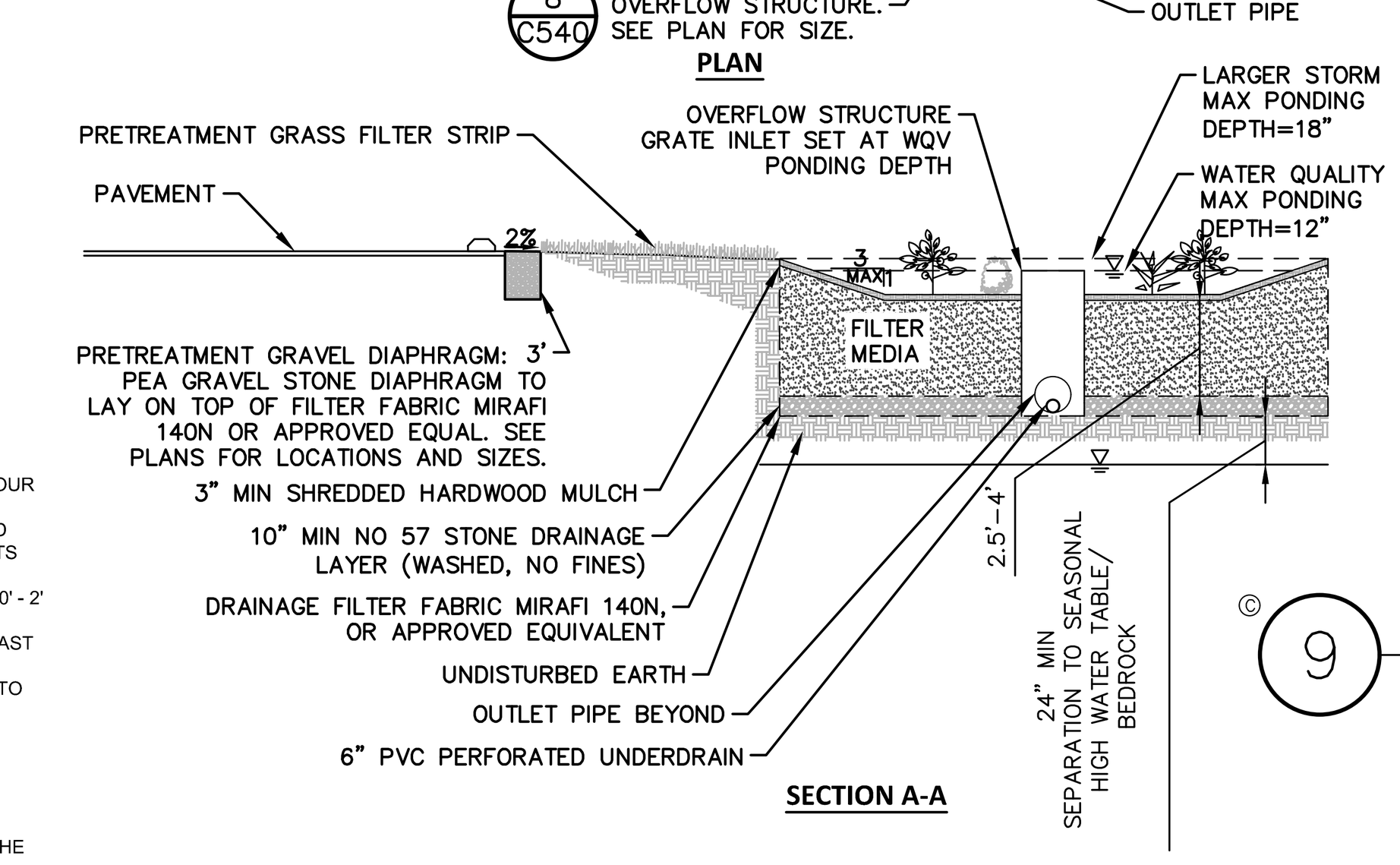

NOTES:
1. SOIL COMPOSITION (TO BE DEMONSTRATED BY CONTRACTOR):
   35–60% SAND*
   30–55% SILT
   10–25% CLAY
   SOIL WILL BE FREE OF STONES, STUMPS, ROOTS, OR OTHER WOODY MATERIAL OVER 1" IN DIAMETER. PLACE PLANTING SOIL IN 12" LIFTS, LOOSELY COMPACTED (USE LIGHT EQUIPMENT SUCH AS COMPACT LOADER OR DOZER/LOADER WITH MARSH TRACKS). DO NOT USE HEAVY EQUIPMENT WITHIN BIORETENTION AREAS. CONTRACTOR TO DEMONSTRATE: THE SOIL SHALL HAVE A PERMEABILITY OF AT LEAST 0.5 INCH PER HOUR.

   * SAND SUBSTITUTION SUCH AS DIABASE, GRAYSTONE #10, OR ROCK DUST ARE NOT ACCEPTABLE. NO CALCIUM CARBONATE OR DOLOMITIC SAND SUBSTITUTIONS ARE ACCEPTABLE.
2. RIVER STONE; SHALL CONFORM TO NYSDOT SECTION 620-29
3. CONTRACTOR SHALL DEMONSTRATE: SOIL FOR EACH BIORETENTION AREA SHALL MEET THE FOLLOWING CRITERIA:

PH RANGE**	5.2 – 7.0
ORGANIC MATTER	1.5–4%
MAGNESIUM	35 LBS/ACRE
PHOSPHOROUS	75 LBS/ACRE
POTASSIUM	85 LBS/ACRE
SOLUBLE SALTS	NOT TO EXCEED 500 PPM

   ** IF PH FALLS OUT OF ACCEPTABLE RANGE, PH OF SOIL MAY BE MODIFIED WITH LIME (HIGHER PH), OR WITH WITH IRON SULFATE PLUS SULFUR (LOWER PH).
4. BIORETENTION AREA TO BE SURROUNDED WITH SILT FENCE DURING CONSTRUCTION. ONCE UPSTREAM AREA IS STABILIZED, SILT FENCE TO BE REMOVED AS APPROVED BY PROJECT ENGINEER.

© 9 **FILTRATION BIORETENTION (F-5)**
SCALE: NTS

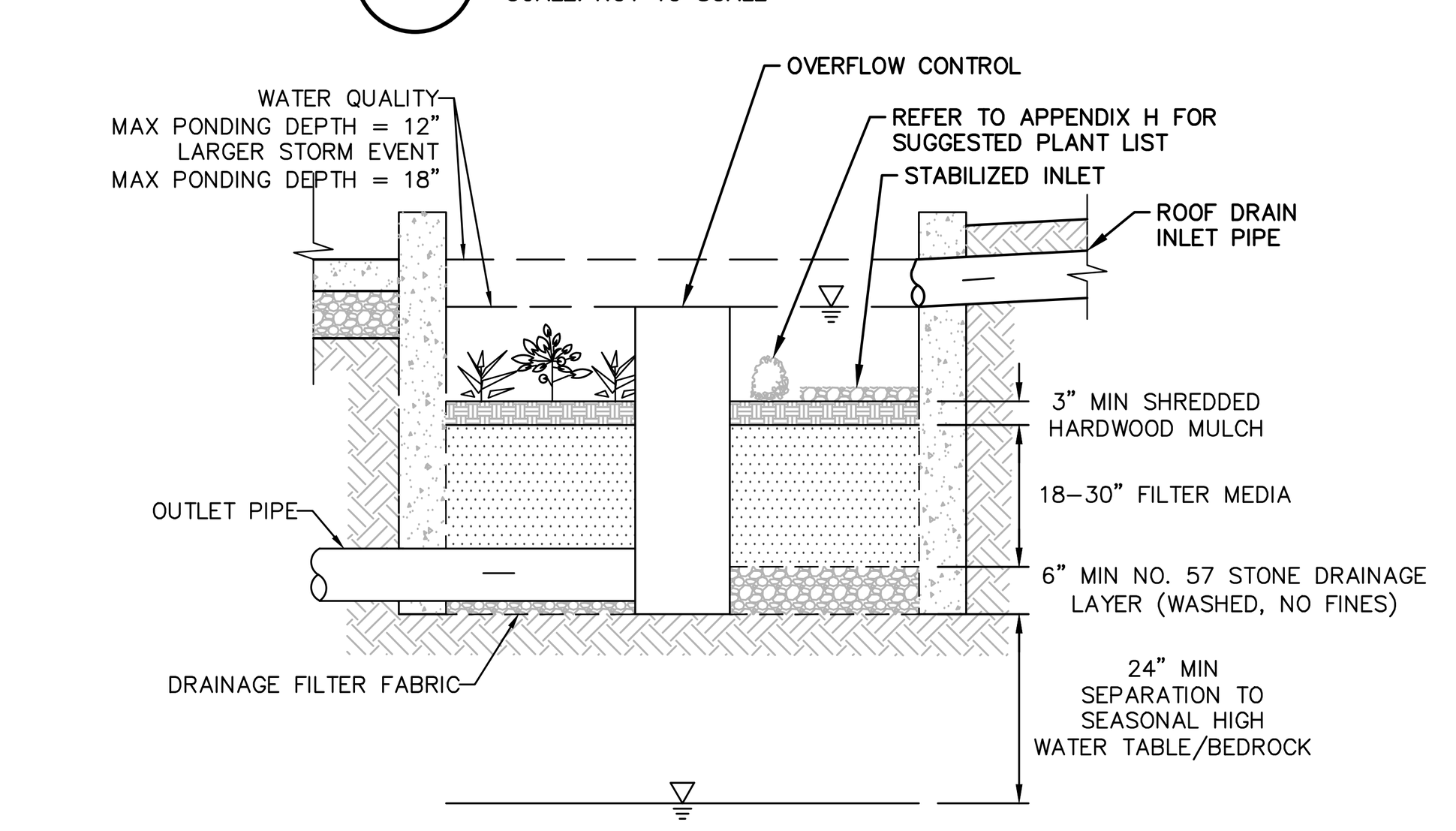

INFILTRATION STORMWATER PLANTER SECTION VIEW

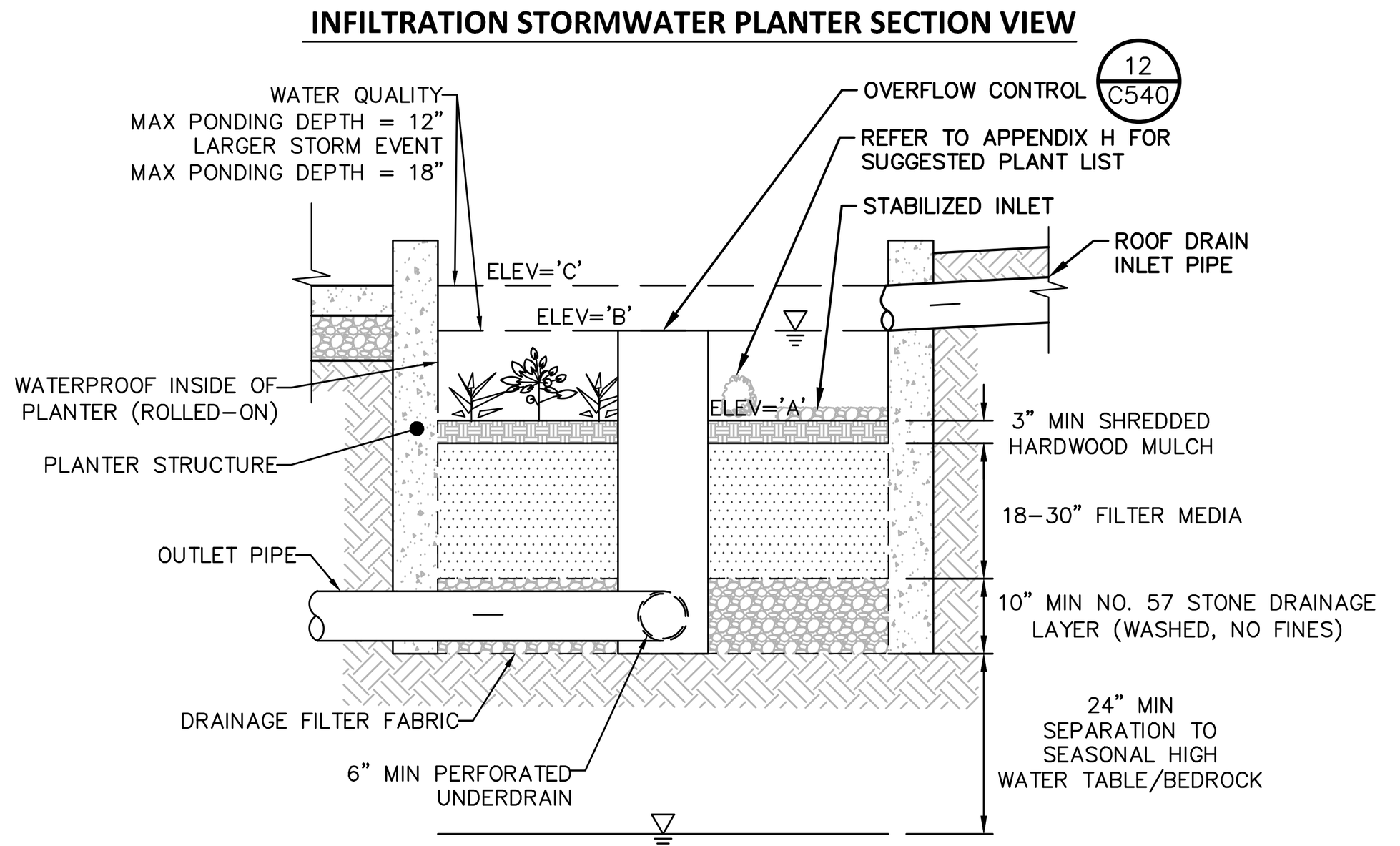

FILTRATION STORMWATER PLANTER SECTION VIEW

NOTES:
1. SANDY LOAM TOPSOIL SHALL HAVE AN INFILTRATION RATE OF 2 INCHES PER HOUR AND 5 INCHES AN HOUR FOR SAND AND GRAVEL COURSE.
2. SOIL COMPACTION MUST BE NO GREATER THAN 85% IN THE PLANTER.
3. THE GROWING MEDIA SHOULD BE UNIFORM MIXTURE OF 70% SAND (100% PASSING THE 1-INCH SIEVE AND 5% PASSING THE NO. 200 SIEVE) AND 30% TOPSOIL WITH AN AVERAGE OF 5% ORGANIC MATERIAL, SUCH AS COMPOST OR PEAT, FREE OF STONES, ROOTS AND WOODY DEBRIS AND ANIMAL WASTE.
4. DRAINAGE LAYER SHALL BE CLEAN SAND WITH 100% PASSING THE 1-INCH SIEVE AND 5% PASSING THE NO. 200 SIEVE.
5. SEE LANDSCAPE PLAN FOR PROPOSED PLANTING SCHEDULES.

PLANTER ELEVATION

BUILDING PLANTER	ELEVATIONS 'A' ELEV	'B' ELEV	'C' ELEV
PLANTER -1	195.0'	196.0'	196.5'
PLANTER -2	193.3'	194.3'	194.8'

© 8 **STORMWATER PLANTER (RR-7)**
SCALE: NTS

TYPICAL HDPE END SECTION

PIPE DIA.	END SECTION DIMENSIONS A	B	C	D
12"	42"	14"	34"	6"
15"	42"	17"	34"	6"
18"	59"	21"	48"	6"
24"	59"	27"	48"	6"
30"	82"	34"	58"	6"
36"	82"	41"	58"	6"

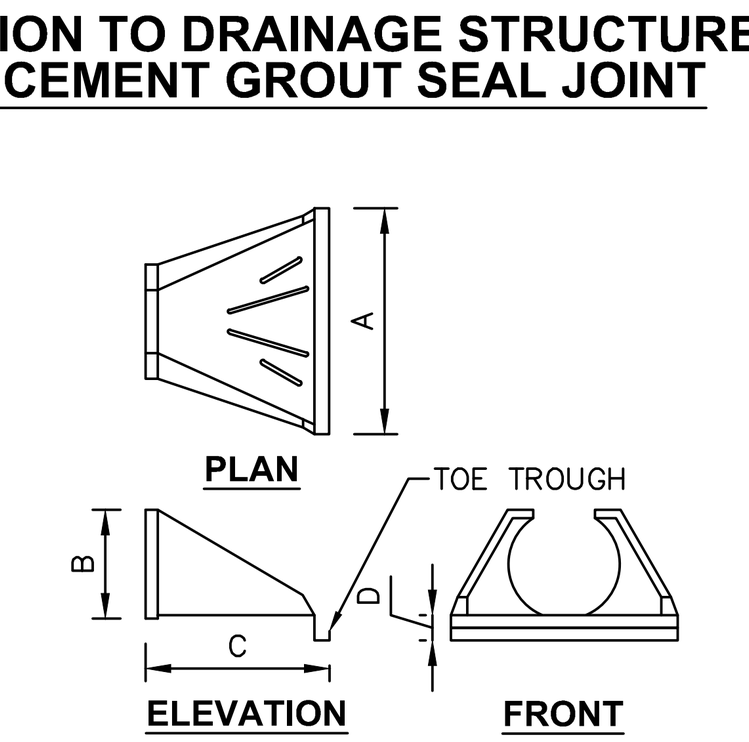

NOTES:
1. SCOPE: THIS SPECIFICATION DESCRIBES 12- THROUGH 36-INCH ADS FLARED END SECTIONS FOR USE IN CULVERT AND DRAINAGE OUTLET APPLICATIONS. FES LARGER THAN 36" SHALL USE CIRCULAR CORRUGATED METAL FLARED END SECTIONS.
2. REQUIREMENTS: THE INVERT OF THE PIPE AND THE END SECTION SHALL BE AT THE SAME ELEVATION. THE ADS FLARED END SECTION SHALL BE HIGH DENSITY POLYETHYLENE MEETING ASTM D3350 MINIMUM CELL CLASSIFICATION 213320C; CONTACT MANUFACTURER FOR ADDITIONAL CELL CLASSIFICATION INFORMATION. WHEN PROVIDED, THE METAL THREADED FASTENING ROD SHALL BE STAINLESS STEEL.
3. INSTALLATION: INSTALLATION SHALL BE IN ACCORDANCE WITH ADS INSTALLATION INSTRUCTIONS AND WITH THOSE ISSUED BY STATE OR LOCAL AUTHORITIES. CONTACT YOUR LOCAL ADS REPRESENTATIVE OR VISIT WWW.ADS-PIPE.COM FOR THE LATEST INSTALLATION INSTRUCTIONS.
4. PROVIDE TRASH RACK ONLY WHERE SPECIFIED ON SITE PLANS.

© 11 **TYPICAL END SECTION - HDPE**
SCALE: NOT TO SCALE

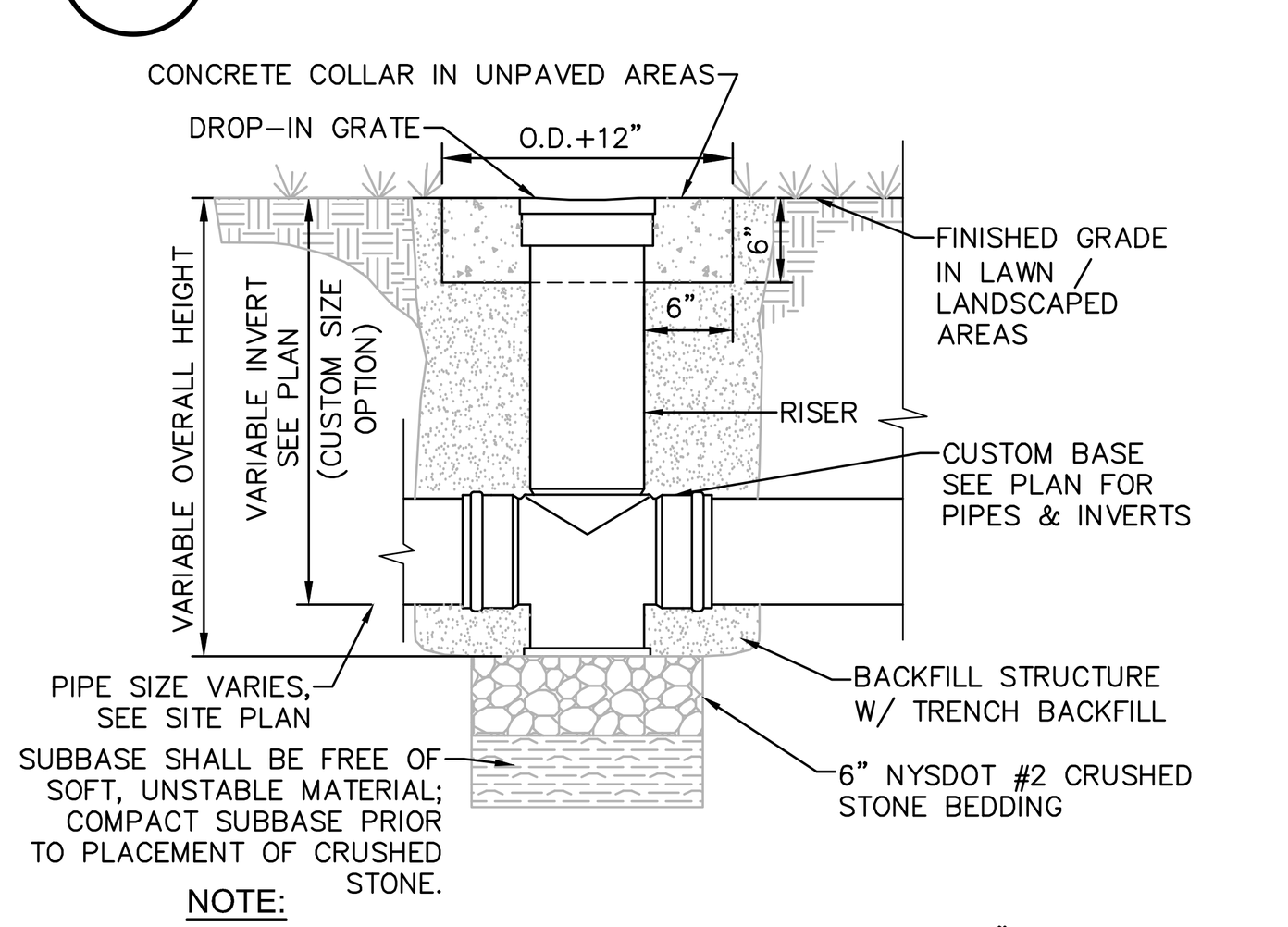

NOTE:
1. BACKFILL USING TRENCH BACKFILL, COMPACTED IN 6" LIFTS.

© 12 **NYOPLAST DRAIN BASIN**
SCALE: NOT TO SCALE

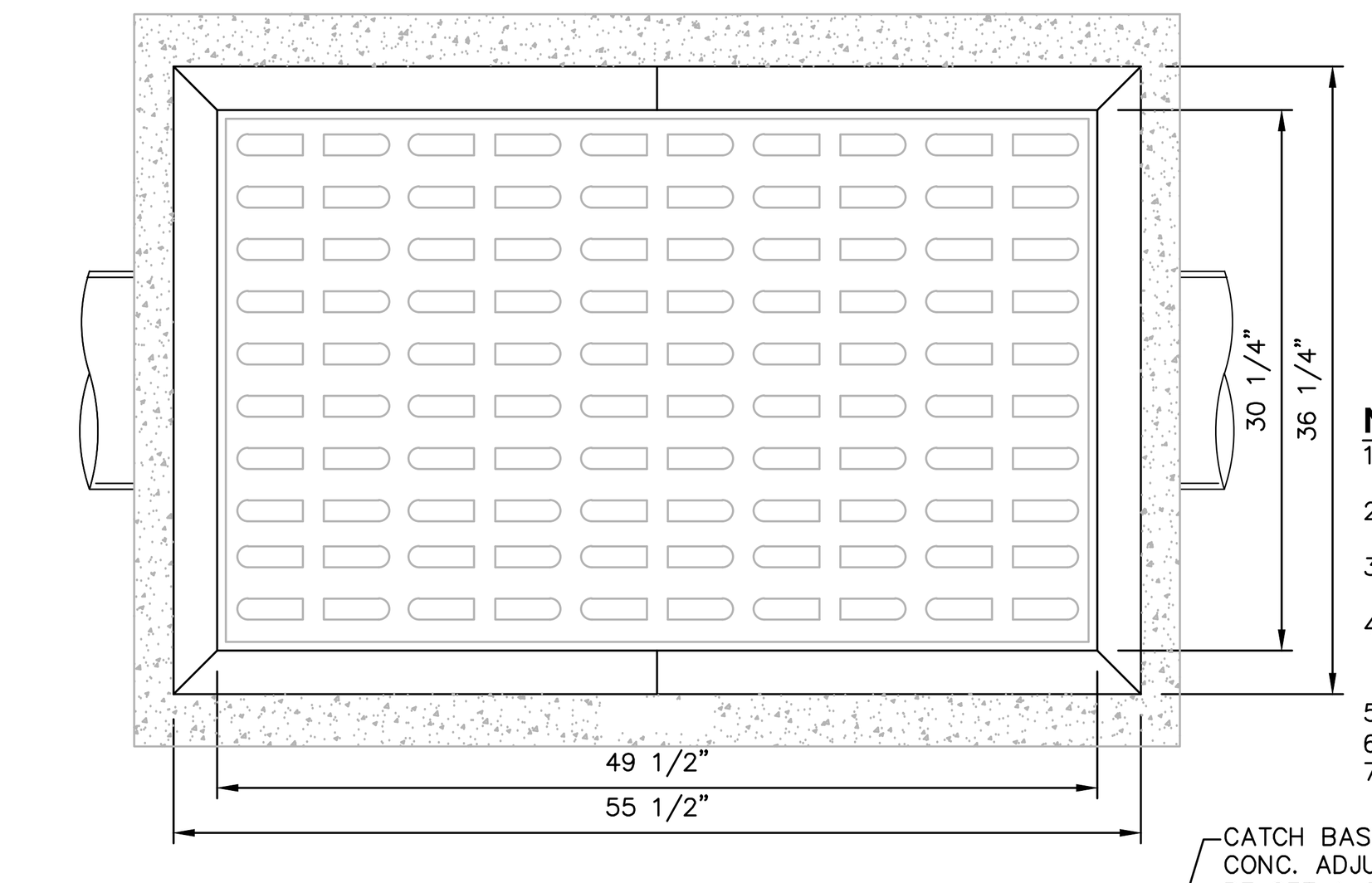

NOTES:
1. CATCH BASIN SHALL BE PRECAST CONCRETE. DESIGNED FOR HS20-44 VEHICULAR LOADING AND 25% IMPACT.
2. FRAME AND COVER SHALL BE DESIGNED FOR HS20-44 VEHICULAR LOADING & 25% IMPACT.
3. CONCRETE CATCH BASIN CASTING CLEAR OPENING DIMENSION MUST MATCH FRAME AND GRATE CLEAR OPENING DIMENSION.
4. CATCH BASINS HAVING A DEPTH GREATER THAN 48" FROM FINISHED SURFACE TO THE TOP OF THE CONCRETE BASE SHALL BE PROVIDED WITH STEPS.
5. BACKFILL USING TRENCH BACKFILL, COMPACTED IN 6" LIFTS.
6. SUMPS FOR CATCH BASINS SHALL BE 12".
7. EJ GROUP GRATE & FRAME PN#00758535A01 OR EQUIVALENT.

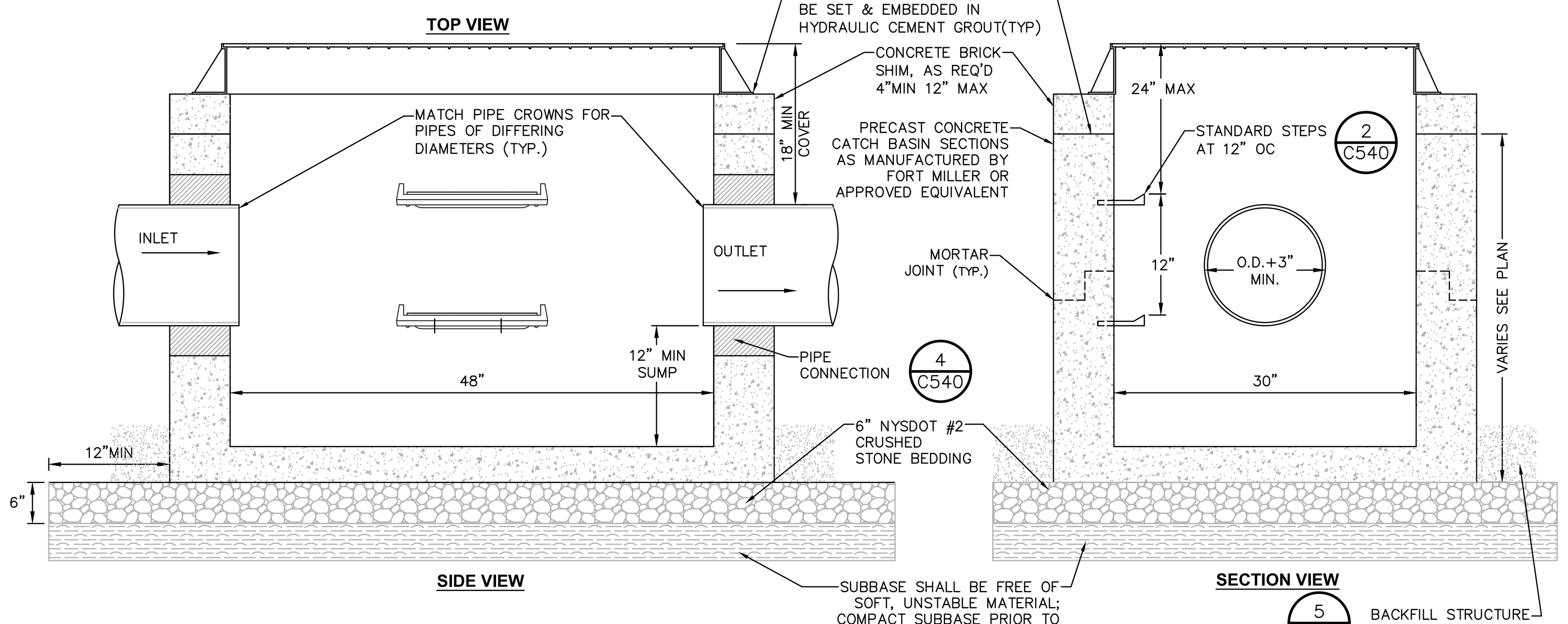

© 7 **PRECAST CONCRETE RECTANGULAR CATCH BASIN DETAIL**
SCALE: NOT TO SCALE

NYLOPLAST 18" DRAIN BASIN:

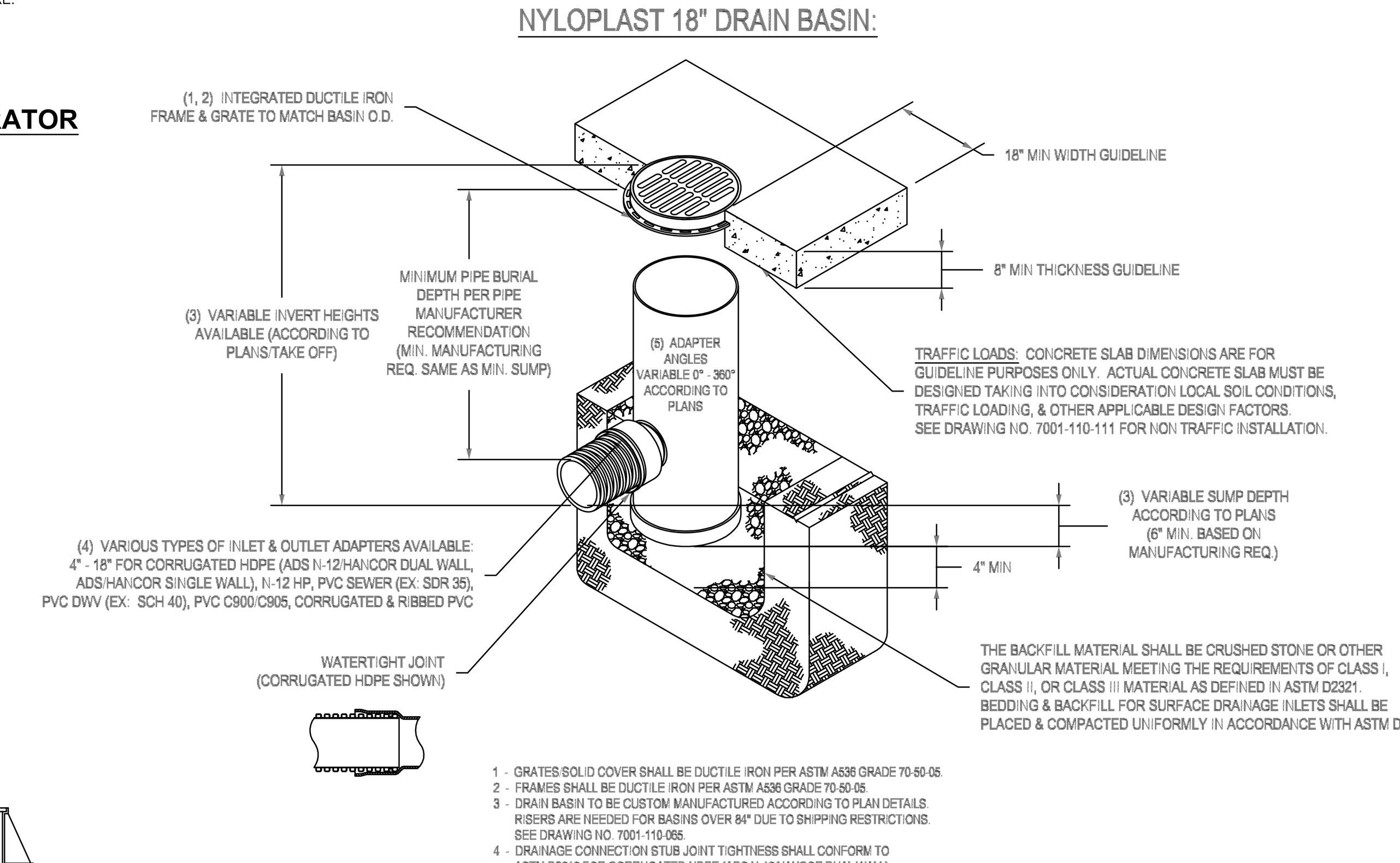

1 - GRATES/SOLID COVER SHALL BE DUCTILE IRON PER ASTM A536 GRADE 70-50-05.
2 - FRAMES SHALL BE DUCTILE IRON PER ASTM A536 GRADE 70-50-05.
3 - DRAIN BASIN TO BE CUSTOM MANUFACTURED ACCORDING TO PLAN DETAILS. RISERS ARE NEEDED FOR BASINS OVER 84" DUE TO SHIPPING RESTRICTIONS. SEE DRAWING NO. 7001-110-065.
4 - DRAINAGE CONNECTION STUB JOINT TIGHTNESS SHALL CONFORM TO ASTM D3212 FOR CORRUGATED HDPE (ADS N-12/HANCOR DUAL WALL), N-12 HP, & PVC SEWER.
5 - ADAPTERS CAN BE MOUNTED ON ANY ANGLE 0° TO 360°. TO DETERMINE MINIMUM ANGLE BETWEEN ADAPTERS SEE DRAWING NO. 7001-110-012.

© 16 **18" NYLOPLAST DRAIN BASIN DETAIL**
SCALE: NOT TO SCALE

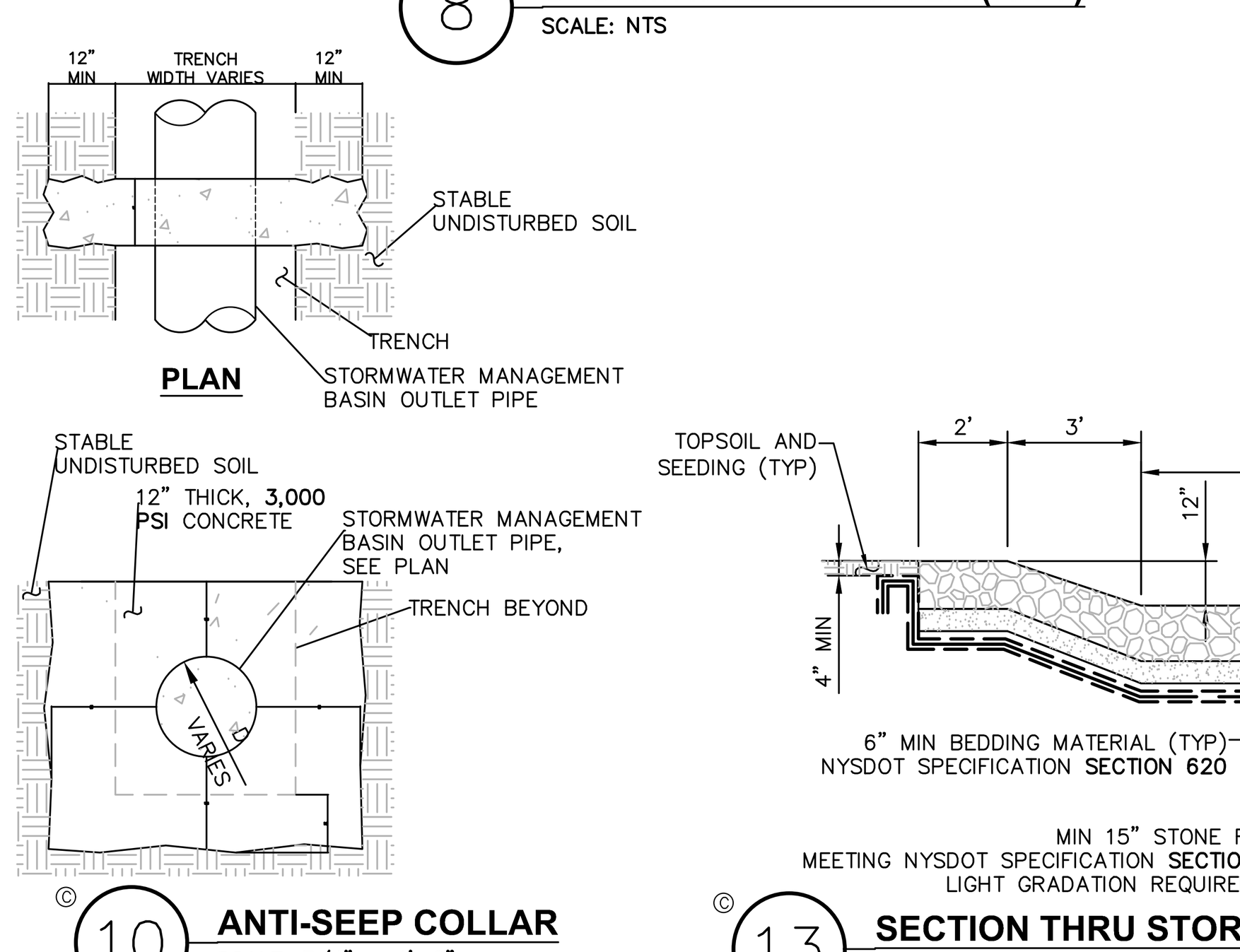

© 10 **ANTI-SEEP COLLAR**
SCALE: 3/4" = 1'-0"

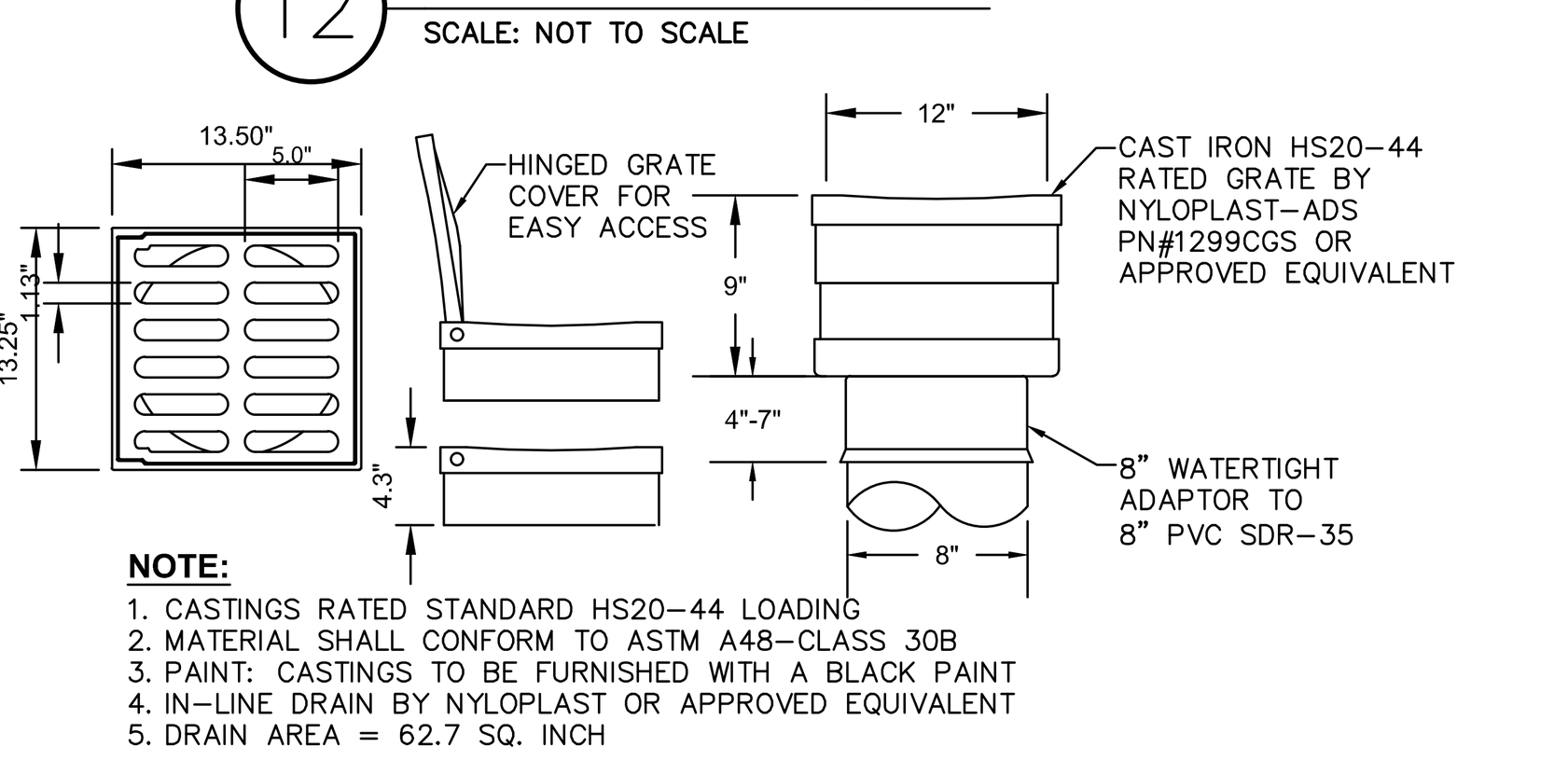

NOTE:
1. CASTINGS RATED STANDARD HS20-44 LOADING
2. MATERIAL SHALL CONFORM TO ASTM A48-CLASS 30B
3. PAINT: CASTINGS TO BE FURNISHED WITH A BLACK PAINT
4. IN-LINE DRAIN BY NYLOPLAST OR APPROVED EQUIVALENT
5. DRAIN AREA = 62.7 SQ. INCH

© 14 **12" IN-LINE DRAIN & GRATE**
SCALE: NOT TO SCALE

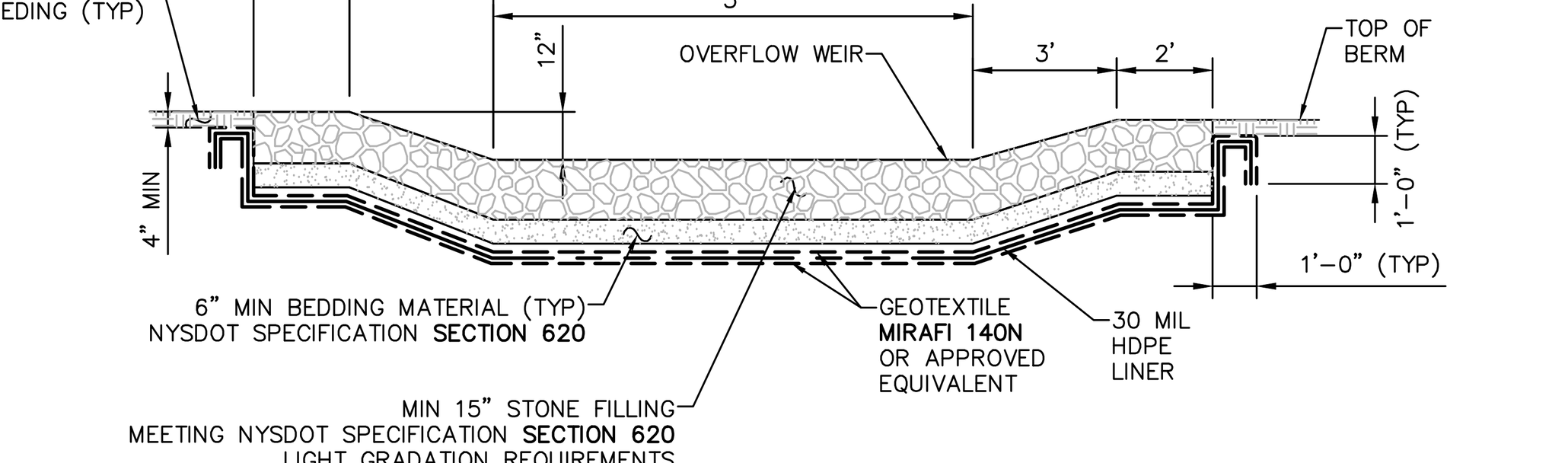

© 13 **SECTION THRU STORM WATER MANAGEMENT BASIN OVER FLOW WEIR**
SCALE: NOT TO SCALE

1899CGS

APPROX. DRAIN AREA = 116.72 SQ IN
APPROX. WEIGHT WITH FRAME = 68.50 LBS

DIMENSIONS ARE FOR REFERENCE ONLY
ACTUAL DIMENSIONS MAY VARY
DIMENSIONS ARE IN INCHES
GRATE MEETS H-20 LOAD RATING
QUALITY: MATERIALS SHALL CONFORM TO ASTM A536 GRADE 70-50-05
PAINT: CASTINGS ARE FURNISHED WITH A BLACK PAINT
LOCKING DEVICE AVAILABLE UPON REQUEST SEE DRAWING NO. 7001-110-029

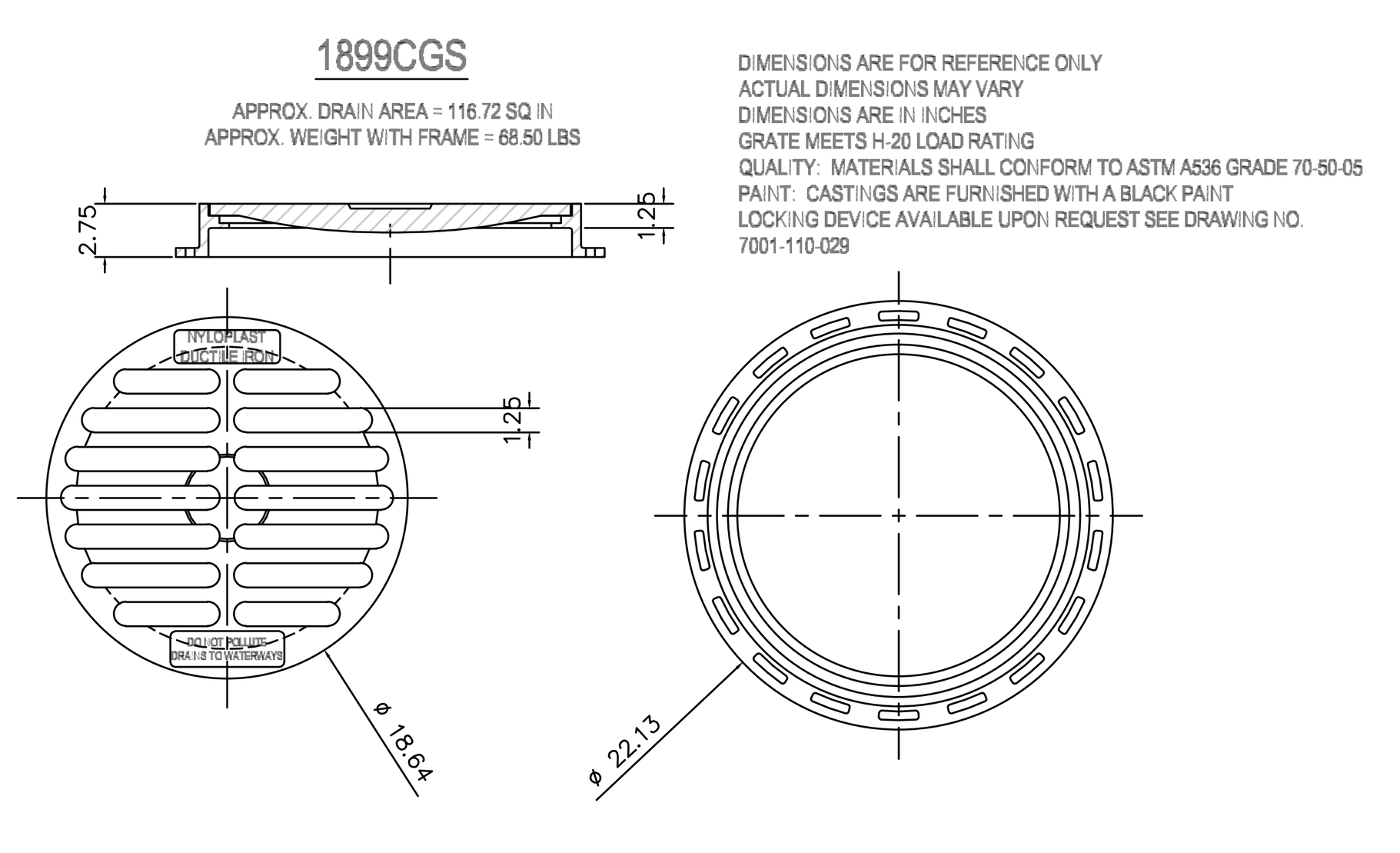

© 17 **18" NYLOPLAST GRATE DETAIL**
SCALE: NOT TO SCALE

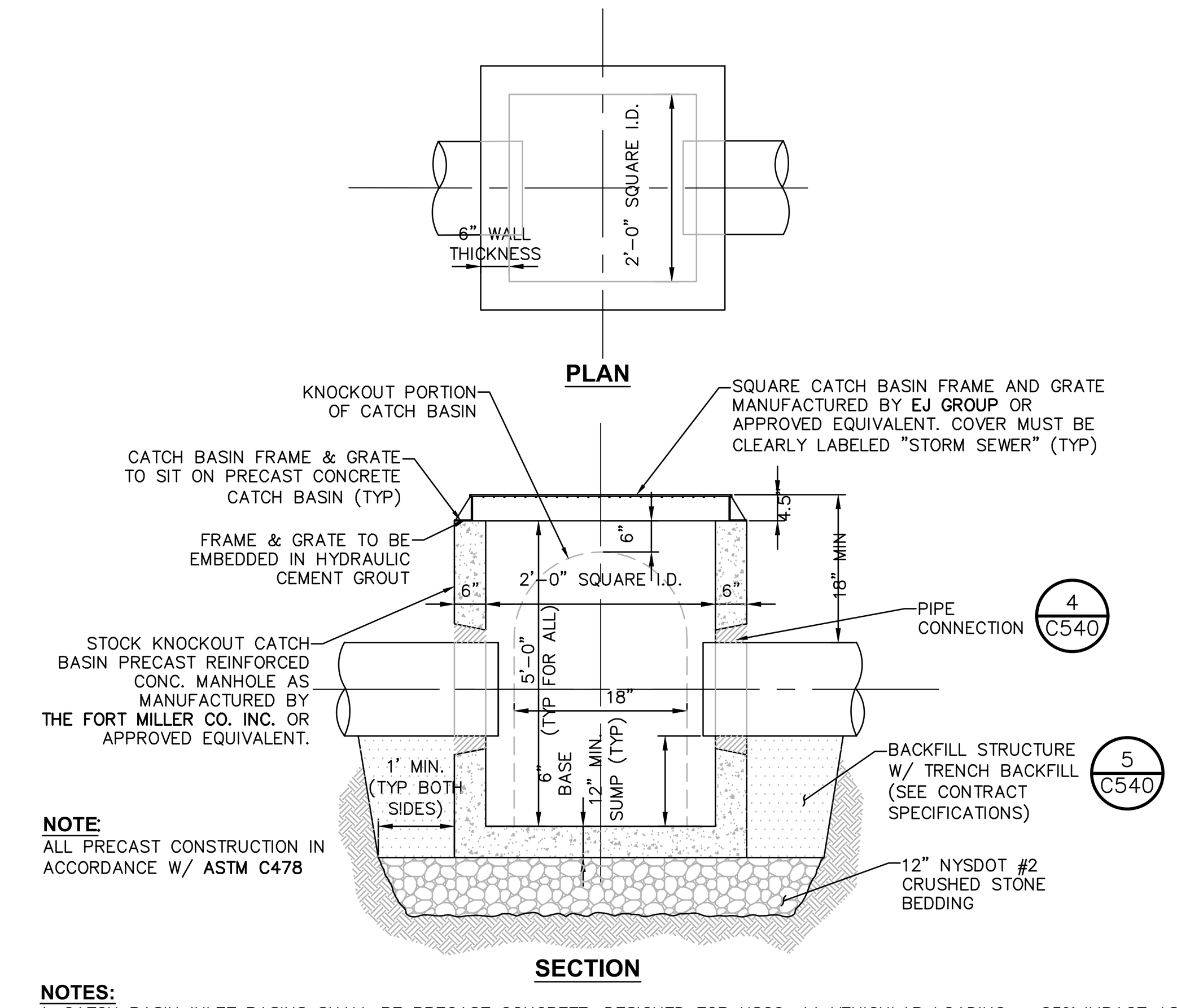

NOTE:
ALL PRECAST CONSTRUCTION IN ACCORDANCE W/ ASTM C478

NOTES:
1. CATCH BASIN INLET BASINS SHALL BE PRECAST CONCRETE. DESIGNED FOR HS20-44 VEHICULAR LOADING + 25% IMPACT AS MANUFACTURED BY FORT MILLER OR APPROVED EQUAL.
2. CATCH BASIN SHALL NOT HAVE A DEPTH GREATER THAN 60" FROM FINISHED SURFACE.
3. BACKFILL USING TRENCH BACKFILL, COMPACTED IN 6" LIFTS.
4. MAX STORM SEWER PIPE FOR SHALLOW 2' CATCH BASIN IS 15"
5. SEE UTILITY PLANS C160-163 FOR STRUCTURE SPECIFIC INVERTS

© 15 **24"X24" PRECAST CONCRETE CATCH BASIN DETAIL**
SCALE: NOT TO SCALE

LaBella
Powered by partnership.
21 Fox Street
Poughkeepsie, NY 12601
845-454-3980
labellapc.com

NOT FOR CONSTRUCTION
EXP: ##/##/20##   EXP: ##/##/20##

CERTIFICATE OF AUTHORIZATION NUMBER:
PROFESSIONAL ENGINEERING: 0021272
LAND SURVEYING: 0021271
GEOLOGICAL: 0021659

It is a violation of New York Education Law Art. 145 Sec. 7209 & Art. 147 Sec. 7307, for any person, unless acting under the direction of a licensed architect, professional engineer, or land surveyor, to alter an item in any way. If an item bearing the seal of an architect, engineer, or land surveyor is altered; the altering architect, engineer, or land surveyor shall affix to the item their seal and notation "altered by" followed by their signature and date of such alteration, and a specific description of the alteration.

© 2025 LaBella Associates

MASELO REALTY LLC
18 EASTVIEW ROAD
MONSEY, NY 10952

HIGHVIEW AT THE FALLKILL CREEK
CITY OF POUGHKEEPSIE
DUTCHESS COUNTY, NEW YORK

NO:	DATE:	DESCRIPTION:
Revisions		

PROJECT NUMBER: CZ81947.00
DRAWN BY: JRR
REVIEWED BY: KGA
ISSUED FOR: PLANNING BOARD REVIEW
DATE: 10/28/2025
DRAWING NAME: **STORMWATER DETAILS**
DRAWING NUMBER: **C540**

Drawing Name: B:\GLOBAL\Legacy\Chazen\Projects\81900-81999\81947.00 - Highview II\DWG\01_C540_81747-00_STRMD.DWG
Xref's Attached: X-BORDER_81947-00_30x42
Date Printed: Oct 27, 2025, 4:26pm

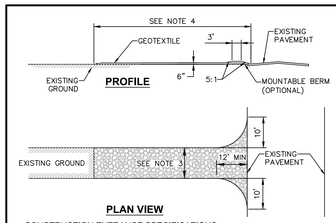

PLAN VIEW

CONSTRUCTION ENTRANCE SPECIFICATIONS:

1. STONE SIZE – USE 2" STONE, OR RECLAIMED OR RECYCLED CONCRETE EQUIVALENT.
2. THICKNESS – NOT LESS THAN SIX (6) INCHES.
3. WIDTH – TWELVE (12) FOOT MINIMUM, BUT NOT LESS THAN THE FULL WIDTH AT POINTS WHERE INGRESS OR EGRESS OCCURS. TWENTY FOUR (24) FEET IF SINGLE ENTRANCE TO SITE.
4. LENGTH – NOT LESS THAN 50' (EXCEPT ON A SINGLE RESIDENCE LOT WHERE A 30' MINIMUM LENGTH WOULD APPLY).
5. GEOTEXTILE – WILL BE PLACED OVER THE ENTIRE AREA PRIOR TO PLACING OF STONE.
6. SURFACE WATER – ALL SURFACE WATER FLOWING OR DIVERTED TOWARD CONSTRUCTION ENTRANCES SHALL BE PIPED ACROSS THE ENTRANCE. IF PIPING IS IMPRACTICAL, A MOUNTABLE BERM WITH 5:1 SLOPES WILL BE PERMITTED.
7. MAINTENANCE – THE ENTRANCE SHALL BE MAINTAINED IN A CONDITION WHICH WILL PREVENT TRACKING OR FLOWING OF SEDIMENT ONTO PUBLIC RIGHTS–OF–WAY. THIS MAY REQUIRE PERIODIC TOP DRESSING WITH ADDITIONAL STONE AS CONDITIONS DEMAND AND REPAIR AND/OR CLEANOUT OF ANY MEASURES USED TO TRAP SEDIMENT. ALL SEDIMENT SPILLED, DROPPED, WASHED OR TRACKED ONTO PUBLIC RIGHTS–OF–WAY MUST BE REMOVED IMMEDIATELY.
8. WASHING – WHEELS SHALL BE CLEANED TO REMOVE SEDIMENT PRIOR TO ENTRANCE ONTO PUBLIC RIGHTS–OF–WAY. WHEN WASHING IS REQUIRED, IT SHALL BE DONE ON AN AREA STABILIZED WITH STONE AND WHICH DRAINS INTO AN APPROVED SEDIMENT TRAPPING DEVICE.
9. PERIODIC INSPECTION AND NEEDED MAINTENANCE SHALL BE PROVIDED AFTER EACH RAIN.

① STABILIZED CONSTRUCTION ACCESS DETAIL
SCALE: NOT TO SCALE

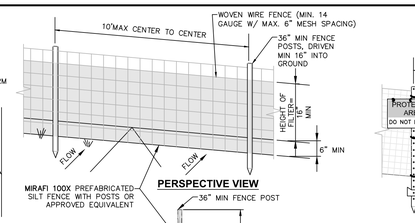

PERSPECTIVE VIEW

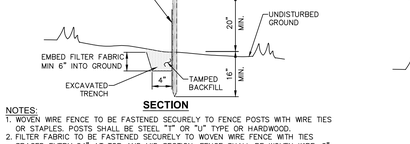

SECTION

NOTES:

1. WOVEN WIRE FENCE TO BE FASTENED SECURELY TO FENCE POSTS WITH WIRE TIES OR STAPLES. POSTS SHALL BE STEEL "T" OR "L" TYPE OR HARDWOOD.
2. FILTER FABRIC TO BE FASTENED SECURELY TO WOVEN WIRE FENCE WITH TIES SPACED EVERY 24" AT TOP AND MID SECTION. FENCE SHALL BE WOVEN WIRE, 6" MAX MESH OPENING.
3. WHEN TWO SECTIONS OF FILTER FABRIC ADJOIN EACH OTHER THEY SHALL BE OVERLAPPED 6" AND FOLDED.
4. MAINTENANCE SHALL BE PERFORMED AS NEEDED AND MATERIALS REMOVED WHEN "BULGES" DEVELOP IN THE SILT FENCE.
5. MAXIMUM DRAINAGE AREA FOR OVERLAND FLOW TO A SILT FENCE SHALL NOT EXCEED 1/4 ACRE PER 100 FEET OF FENCE.
6. SILT FENCE SHALL BE USED WHERE EROSION COULD OCCUR IN THE FORM OF SHEET EROSION.
7. SILT FENCE SHALL NOT BE USED WHEN A CONCENTRATION OF WATER IS FLOWING TO THE BARRIER.
8. MAXIMUM ALLOWABLE SLOPE LENGTHS CONTRIBUTING RUN–OFF TO A SILT FENCE ARE:

SLOPE STEEPNESS	MAXIMUM SLOPE LENGTH(FT)
2:1	25
3:1	50
4:1	75
OR FLATTER	100

② SILT FENCE INSTALLATION DETAIL
SCALE: NOT TO SCALE

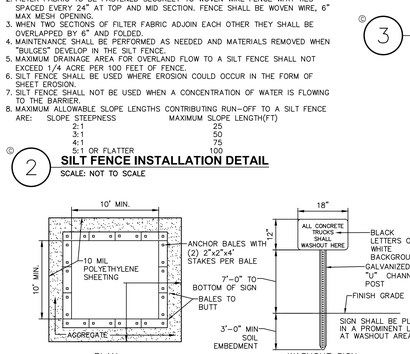

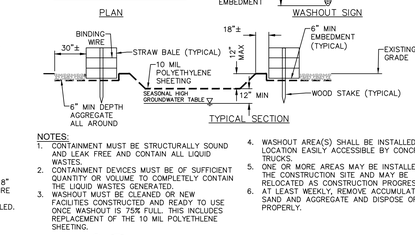

NOTES:

1. CONTAINMENT MUST BE STRUCTURALLY SOUND AND LEAK FREE AND CONTAIN ALL LIQUID WASTES.
2. CONTAINMENT DEVICES MUST BE OF SUFFICIENT QUANTITY OR VOLUME TO COMPLETELY CONTAIN THE LIQUID WASTES GENERATED.
3. WASHOUT MUST BE CLEANED OR NEW FACILITIES CONSTRUCTED AND READY TO USE ONCE WASHOUT IS 75% FULL. THIS INCLUDES REPLACEMENT OF THE 10 MIL POLYETHLENE SHEETING.
4. WASHOUT AREA(S) SHALL BE INSTALLED IN A LOCATION EASILY ACCESSIBLE BY CONCRETE TRUCKS.
5. ONE OR MORE AREAS MAY BE INSTALLED ON THE CONSTRUCTION SITE AND MAY BE RELOCATED AS CONSTRUCTION PROGRESSES.
6. AT LEAST WEEKLY, REMOVE ACCUMULATION OF SAND AND AGGREGATE AND DISPOSE OF PROPERLY.

③ TEMPORARY ORANGE CONSTRUCTION FENCE DETAIL
SCALE: NOT TO SCALE

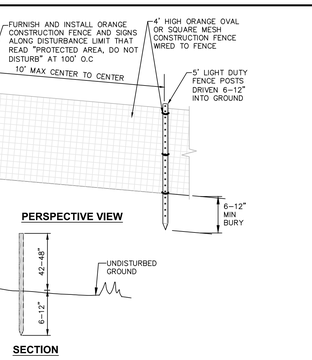

SECTION

STONE APRON SIZING REQUIREMENT - TABLE "A"

CULVERT DIA. (D)	CULVERT SLOPE, %	NYSDOT STANDARD STONE FILLING APRON MATERIAL	d50	dMAX	MINIMUM APRON THICKNESS (IN)	MINIMUM OUTLET APRON LENGTH(FT) (Lo)
12"	< 8	LIGHT	6"	9"	18	10
	8–10	MEDIUM	9"–12"	14"–18"	24	10
18"	< 4	LIGHT	6"	9"	18	10
	4–6	MEDIUM	9"–12"	14"–18"	24	12
	6–8	HEAVY	15"–18"	22"–27"	36	12
	8–10	HEAVY	15"–18"	22"–27"	36	18
24"	< 3	LIGHT	6"	9"	18	12
	3–4	MEDIUM	9"–12"	14"–18"	24	16
	4–8	HEAVY	15"–18"	22"–27"	36	24
30"	< 1	LIGHT	6"	9"	18	15
	1–2	MEDIUM	9"–12"	14"–18"	24	20
	2–4	HEAVY	15"–18"	22"–27"	36	25
	4–6	HEAVY	15"–18"	22"–27"	36	30
36"	< 2	MEDIUM	9"–12"	14"–18"	24	24
	2–3	HEAVY	15"–18"	22"–27"	36	30
	3–5	HEAVY	15"–18"	22"–27"	36	36
42"	< 1	MEDIUM	9"–12"	14"–18"	24	28
	1–2	HEAVY	15"–18"	22"–27"	36	35
	2–3	HEAVY	15"–18"	22"–27"	36	42
48"	< 1	MEDIUM	9"–12"	14"–18"	24	32
	1–2	HEAVY	15"–18"	22"–27"	36	40
	2–3	HEAVY	15"–18"	22"–27"	36	48

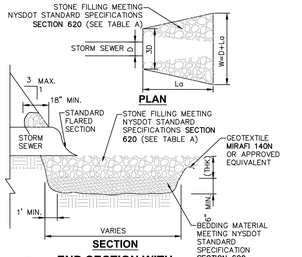

SECTION

⑥ END SECTION WITH STONE LINED APRON DETAIL
SCALE: NOT TO SCALE

④ TEMPORARY OUT OF PAVEMENT FILTER FABRIC DROP INLET PROTECTION DETAIL
SCALE: NOT TO SCALE

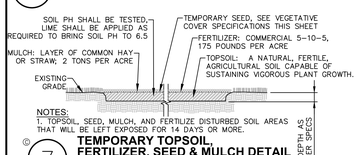

PLAN

SECTION

NOTES:

1. FILTER FABRIC SHALL HAVE AN EOS OF 40–85.
2. CUT FABRIC FROM CONTINUOUS ROLL TO ELIMINATE JOINTS. IF JOINTS ARE NEEDED, OVERLAP TO THE NEXT STAKE.
3. STAKE MATERIALS WILL BE STANDARD 2"x4" WOOD OR EQUIVALENT, WITH A MINIMUM LENGTH OF 3 FEET.
4. SPACE STAKES EVENLY AROUND INLET 3 FEET APART AND DRIVE MINIMUM 18" DEEP. SPANS GREATER THAN 3 FEET MAY BE BRIDGED WITH THE USE OF WIRE MESH BEHIND FABRIC FOR SUPPORT.
5. FABRIC SHALL BE EMBEDDED 1 FOOT MINIMUM BELOW GROUND AND BACKFILLED. IT SHALL BE SECURELY FASTENED TO THE STAKES AND FRAME.
6. A 2"x4" WOOD FRAME SHALL BE COMPLETED AROUND THE CREST OF THE FABRIC FOR OVERFLOW STABILITY.
7. MAXIMUM DRAINAGE AREA IS 1 ACRE.
8. INLET PROTECTION SHALL REMAIN IN–PLACE UNTIL SITE HAS BEEN STABILIZED.

⑤ CONCRETE WASHOUT AREA DETAIL
SCALE: NOT TO SCALE

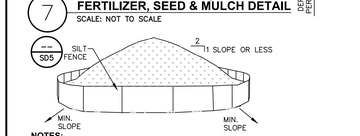

NOTES:

1. TOPSOIL, SEED, MULCH, AND FERTILIZE DISTURBED SOIL AREAS THAT WILL BE LEFT EXPOSED FOR 14 DAYS OR MORE.

⑦ TEMPORARY TOPSOIL, FERTILIZER, SEED & MULCH DETAIL
SCALE: NOT TO SCALE

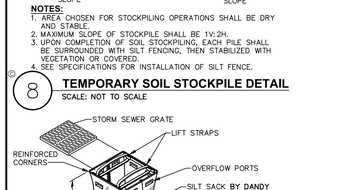

NOTES:

1. AREA CHOSEN FOR STOCKPILING OPERATIONS SHALL BE DRY AND STABLE.
2. MAXIMUM SLOPE OF STOCKPILE SHALL BE 1V: 2H.
3. UPON COMPLETION OF SOIL STOCKPILING, EACH PILE SHALL BE SURROUNDED WITH SILT FENCING, THEN STABILIZED WITH VEGETATION OR COVERED.
4. SEE SPECIFICATIONS FOR INSTALLATION OF SILT FENCE.

⑧ TEMPORARY SOIL STOCKPILE DETAIL
SCALE: NOT TO SCALE

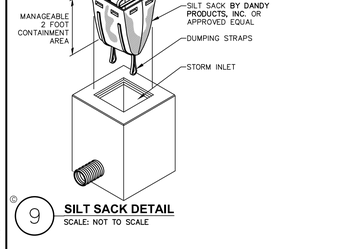

⑨ SILT SACK DETAIL
SCALE: NOT TO SCALE

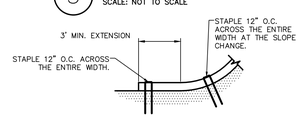

"BOTTOM OF SLOPE TERMINATION"

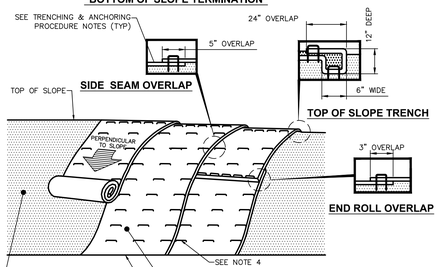

NOTES:

1. PREPARE THE TOPSOIL (SEEDBED) FIRST BY RAKING, SHAPING, FINE GRADING, COMPACTING, SEEDING & FERTILIZING THE SLOPES.
2. USE THE TRENCHING & ANCHORING PROCEDURES DETAILED HEREIN TO SECURE ANY EXPOSED MATERIAL ENDS. SECURE ALL PRODUCT OVERLAPS. OVERLAP IN THE DIRECTION OF WATER FLOW, PERPENDICULAR TO THE SLOPE.
3. KEEP EROSION CONTROL BLANKET IN SOLID CONTACT WITH THE TOPSOIL.
4. USE THE REQUIRED NUMBER OF STAPLES/STAKES TO SECURELY FASTEN THE EROSION CONTROL BLANKET TO THE SLOPE. IN LOOSE SOIL CONDITIONS, THE USE OF STAPLES/STAKES LENGTHS GREATER THAN 6" MAYBE NECESSARY FOR PROPER SECURING. STAPLE PATTERNS & OVERLAPS ARE DEPENDENT ON SITE CONDITIONS & MANUFACTURER'S REQUIREMENTS. CONTRACTOR SHALL CONSULT WITH MANUFACTURER FOR ACTUAL SITE SPECIFIC REQUIREMENTS.

TRENCHING & ANCHORING PROCEDURE NOTES:

SIDE SEAM OVERLAP: THE EDGES OF PARALLEL BLANKETS SHALL BE STAPLED WITH A 5" OVERLAP.

TOP OF SLOPE TRENCH: BEGIN AT THE TOP OF SLOPE BY ANCHORING THE EROSION CONTROL BLANKET IN A 6"D x 6"W TRENCH WITH A 12" OVERLAP EXTENDED BEYOND THE UP–SLOPE PORTION OF THE TRENCH. ANCHOR WITH A ROW OF STAPLES/STAKES 12" O.C. IN THE BOTTOM OF THE TRENCH. BACKFILL & COMPACT THE TRENCH AFTER STAPLING. APPLY SEED TO THE COMPACTED SOIL & FOLD THE REMAINING 12" PORTION OF THE EROSION CONTROL BLANKET BACK OVER THE SEED & COMPACTED SOIL. SECURE THE EROSION CONTROL BLANKET OVER THE COMPACTED SOIL WITH A ROW OF STAPLES/STAKES SPACED 12" O.C. ACROSS THE ENTIRE WIDTH.

END ROLL OVERLAP: CONSECUTIVE BLANKETS SPLICED DOWN THE SLOPE SHALL BE PLACED END OVER END (SHINGLE–STYLE) WITH A 3" OVERLAP. STAPLE THRU OVERLAPPED AREAS, 12" APART ACROSS THE ENTIRE WIDTH.

⑩ EROSION CONTROL BLANKET INSTALLATION DETAIL
SCALE: NTS

SPDES GENERAL PERMIT GP-0-25-001 COMPLIANCE NOTES:

THIS PLAN SET AND THE ACCOMPANYING SWPPP ENTITLED STORMWATER POLLUTION PREVENTION PLAN FOR HIGHVIEW II HAVE BEEN SUBMITTED AS A SET. THESE ENGINEERING DRAWINGS ARE CONSIDERED AN INTEGRAL PART OF THE SWPPP. THEREFORE THE PLAN SET IS NOT CONSIDERED COMPLETE WITHOUT THE SWPPP.

1. THIS PROJECT HAS NOT RECEIVED WRITTEN APPROVAL FROM **CITY OF POUGHKEEPSIE** ALLOWING THE DISTURBANCE OF MORE THAN FIVE (5) ACRES OF LAND AT **ANY** ONE TIME. THEREFORE, IF THE CONTRACTOR'S CONSTRUCTION SEQUENCE REQUIRES THE DISTURBANCE OF MORE THAN FIVE ACRES AT ANY ONE TIME, WRITTEN APPROVAL MUST BE OBTAINED FROM NYSDEC PRIOR TO EXCEEDING THE 5 ACRE LIMIT.

CONSTRUCTION SEQUENCING NOTES:

1. PRIOR TO COMMENCING ANY CLEARING, GRUBBING, EARTHWORK ACTIVITIES, ETC.AT THE SITE, THE CONTRACTOR SHALL FLAG THE WORK LIMITS AND SHALL INSTALL TEMPORARY EROSION AND SEDIMENT CONTROL MEASURES (I.E. SILT FENCES, TREE PROTECTION/BARRIER FENCING, STABILIZED CONSTRUCTION ENTRANCES, STORM DRAIN SEDIMENT FILTERS, DRAINAGE DITCH SEDIMENT FILTERS, ETC.) INDICATED ON THE PROJECT DRAWINGS. TEMPORARY EROSION AND SEDIMENT CONTROL MEASURES MUST BE CONSTRUCTED, STABILIZED, AND FUNCTIONAL BEFORE SITE DISTURBANCE BEGINS WITHIN THEIR TRIBUTARY AREAS.
2. THE CONTRACTOR SHALL CLEAR AND GRUB THE AREA OF THE STORMWATER MANAGEMENT FACILITIES. THIS AREA SHALL NOT EXCEED FIVE (5) ACRES IN EXTENT WITHOUT TEMPORARY STABILIZATION.
3. THE STORMWATER DETENTION BASIN SHALL BE UTILIZED AS A TEMPORARY SEDIMENT TRAP DURING CONSTRUCTION. THE CONTRACTOR SHALL INSTALL THE OUTLET CONTROL STRUCTURES AND THE EARTHEN BERM. THE BASIN SHALL BE GRADED TO THE TOP OF THE AQUATIC BENCH AS INDICATED IN THE TYPICAL STORMWATER MANAGEMENT BASIN SECTION PRESENTED IN THE PROJECT DRAWINGS.
4. PRIOR TO COMMENCING CLEARING, GRUBBING AND/OR EARTHWORK ACTIVITIES IN ANY OTHER AREA OF THE SITE, THE CONTRACTOR SHALL INSTALL INLET AND OUTLET PROTECTION MEASURES (RIPRAP OVERFLOW WEIR(S), CULVERT INLET/OUTLET PROTECTION, ETC.) AND SHALL STABILIZE THE AREAS DISTURBED DURING THE CONSTRUCTION OF THE SEDIMENT BASIN.
5. THE CONTRACTOR SHALL INSTALL TEMPORARY DIVERSION MEASURES WITH ASSOCIATED STABILIZATION MEASURES (I.E., VEGETATIVE COVER, DRAINAGE DITCH SEDIMENT FILTERS, STORM DRAIN SEDIMENT FILTERS, ETC.) TO ASSURE THAT STORMWATER RUNOFF IS CONVEYED TO THE TEMPORARY SEDIMENT BASIN.
6. TEMPORARY DIVERSION MEASURES SHALL BE LOCATED IN A MANNER THAT WILL ASSURE THAT THE AREA TRIBUTARY TO EACH DIVERSION DOES NOT EXCEED FIVE (5) ACRES. THESE TEMPORARY DIVERSION MEASURES SHALL BE INSPECTED DAILY AND REPAIRED/STABILIZED AS NECESSARY TO MINIMIZE EROSION.
7. THE CONTRACTOR SHALL COMMENCE SITE CONSTRUCTION ACTIVITIES INCLUDING CLEARING & GRADING OF THE PROPOSED AREA OF DISTURBANCE AS REQUIRED.
8. INSTALL PROTECTIVE MEASURES AT THE LOCATIONS OF ALL CATCH INLETS, CURB INLETS, AND AT THE ENDS OF ALL EXPOSED STORM SEWER PIPES.
9. CONSTRUCT ALL UTILITIES, CURB AND GUTTER, GUTTER INLETS, AREA INLETS, AND STORM SEWER MANHOLES, AS SHOWN ON THE PLANS. INLET PROTECTION MAY BE REMOVED TEMPORARILY FOR THIS CONSTRUCTION. PLACE REQUIRED RIP–RAP AT LOCATIONS SHOWN ON THE PLANS.
10. FINALIZE PAVEMENT SUB–GRADE PREPARATION.
11. REMOVE PROTECTIVE MEASURES AROUND INLETS AND MANHOLES NO MORE THAN 24 HOURS PRIOR TO PLACING STABILIZED BASE COURSE.
12. INSTALL SUB–BASE MATERIAL AS REQUIRED FOR PAVEMENT.
13. PRIOR TO FINALIZING CONSTRUCTION OF THE STORMWATER MANAGEMENT FACILITY, ALL CATCH BASINS AND DRAINAGE LINES SHALL BE CLEANED OF ALL SILT AND SEDIMENT.
14. UPON COMPLETION OF SITE CONSTRUCTION ACTIVITIES, THE CONTRACTOR SHALL FINALIZE CONSTRUCTION OF THE STORMWATER MANAGEMENT FACILITY. THE CONTRACTOR SHALL FINISH GRADE THE FORBAY(S), AQUATIC BENCHES, AND WET POOL(S) AND STABILIZE AS INDICATED IN THE PROJECT DRAWINGS.
15. THE CONTRACTOR SHALL REMOVE ALL TEMPORARY EROSION AND SEDIMENT CONTROL MEASURES AND IMMEDIATELY ESTABLISH PERMANENT VEGETATION ON THE AREAS DISTURBED DURING THEIR REMOVAL.

EROSION AND SEDIMENT CONTROL MEASURES:

1. DAMAGE TO SURFACE WATERS RESULTING FROM EROSION AND SEDIMENTATION SHALL BE MINIMIZED BY STABILIZING ALL DISTURBED AREAS AND BY REMOVING SEDIMENT FROM CONSTRUCTION SITE DISCHARGES.
2. AS MUCH AS IS PRACTICAL, EXISTING VEGETATION SHALL BE PRESERVED. FOLLOWING THE COMPLETION OF CONSTRUCTION ACTIVITIES IN ANY PORTION OF THE SITE, PERMANENT VEGETATION SHALL BE ESTABLISHED ON ALL EXPOSED SOILS.
3. SITE PREPARATION ACTIVITIES SHALL BE PLANNED TO MINIMIZE THE SCOPE AND DURATION OF SOIL DISRUPTION.
4. PERMANENT TRAFFIC CORRIDORS SHALL BE ESTABLISHED AND "ROUTES OF CONVENIENCE" SHALL BE AVOIDED. STABILIZED CONSTRUCTION ENTRANCES SHALL BE INSTALLED AT ALL POINTS OF ENTRY ONTO THE PROJECT SITE.

GENERAL EROSION AND SEDIMENT CONTROL NOTES:

1. ALL EROSION AND SEDIMENT CONTROL MEASURES ARE TO BE IN STRICT COMPLIANCE WITH "NEW YORK STATE STANDARDS AND SPECIFICATIONS FOR EROSION AND SEDIMENT CONTROL", NOVEMBER 2016.
2. EXCESS SOIL TO BE STOCKPILED WITHIN THE LIMITS OF SITE DISTURBANCE IF NOT USED IMMEDIATELY FOR GRADING PURPOSES. INSTALL SILT FENCE AROUND SOIL STOCKPILES.
3. APPLY SURFACE STABILIZATION AND RESTORATION MEASURES. AREAS UNDERGOING CLEARING OR GRADING AND ANY AREAS DISTURBED BY CONSTRUCTION ACTIVITIES WHERE WORK IS DELAYED, SUSPENDED, OR INCOMPLETE AND WILL NOT BE REDISTURBED FOR 21 DAYS OR MORE SHALL BE STABILIZED WITH TEMPORARY VEGETATIVE COVER WITHIN 14 DAYS AFTER CONSTRUCTION ACTIVITY IN THAT PORTION OF THE SITE HAS CEASED. (SEE SPECIFICATIONS FOR TEMPORARY VEGETATIVE COVER). AREAS UNDERGOING CLEARING OR GRADING AND ANY AREAS DISTURBED BY CONSTRUCTION ACTIVITIES WHERE WORK IS COMPLETE AND WILL NOT BE REDISTURBED SHALL BE STABILIZED AND RESTORED WITH PERMANENT VEGETATIVE COVER AS SOON AS SITE AREAS ARE AVAILABLE AND WITHIN 14 DAYS AFTER WORK IS COMPLETE. (SEE SPECIFICATIONS FOR PERMANENT VEGETATIVE COVER). SEEDING FOR PERMANENT VEGETATIVE COVER SHALL BE WITHIN THE SEASONAL LIMITATIONS. PROVIDE STABILIZATION WITH TEMPORARY VEGETATIVE COVER WITHIN 14 DAYS AFTER WORK IS COMPLETE, FOR SEEDING OUTSIDE PERMITTED SEEDING PERIODS.
4. SEEDED AREAS TO BE MULCHED WITH STRAW OR HAY MULCH IN ACCORDANCE WITH VEGETATIVE COVER SPECIFICATIONS.
5. THE CONTRACTOR IS RESPONSIBLE FOR THE INSTALLATION AND MAINTENANCE OF ALL EROSION AND SEDIMENT CONTROL MEASURES THROUGHOUT THE COURSE OF CONSTRUCTION.
6. THE CONTRACTOR IS RESPONSIBLE FOR CONTROLLING DUST BY SPRINKLING EXPOSED SOIL AREAS PERIODICALLY WITH WATER AS REQUIRED. THE CONTRACTOR IS TO SUPPLY ALL EQUIPMENT AND WATER.
7. WHEN ALL DISTURBED AREAS ARE STABLE, ALL TEMPORARY EROSION AND SEDIMENT CONTROL MEASURES SHALL BE REMOVED.

MAINTENANCE OF EROSION AND SEDIMENT CONTROL MEASURES:

PERMANENT AND TEMPORARY VEGETATION:
INSPECT ALL AREAS THAT HAVE RECEIVED VEGETATION EVERY SEVEN DAYS & AFTER EVERY RAIN EVENT. ALL AREAS DAMAGED BY EROSION OR WHERE SEED HAS NOT ESTABLISHED SHALL BE REPAIRED AND RESTABILIZED IMMEDIATELY.

STABILIZED CONSTRUCTION ENTRANCE:
INSPECT THE ENTRANCE PAD EVERY SEVEN DAYS & AFTER EVERY RAIN EVENT. CHECK FOR MUD, SEDIMENT BUILD–UP AND PAD INTEGRITY. MAKE DAILY INSPECTIONS DURING WET WEATHER. RESHAPE PAD AS NEEDED FOR DRAINAGE AND RUNOFF CONTROL. WASH AND REPLACE STONE AS NEEDED. THE STONE IN THE ENTRANCE SHOULD BE WASHED OR REPLACED WHENEVER THE ENTRANCE FAILS TO REDUCE MUD BEING CARRIED OFF–SITE BY VEHICLES. IMMEDIATELY REMOVE MUD AND SEDIMENT TRACKED OR WASHED ONTO PUBLIC ROADS BY BRUSHING OR SWEEPING. REMOVE TEMPORARY CONSTRUCTION ENTRANCE AS SOON AS THEY ARE NO LONGER NEEDED TO PROVIDE ACCESS TO THE SITE.

SILT FENCE:
INSPECT FOR DAMAGE EVERY SEVEN DAYS & AFTER EVERY RAIN EVENT. MAKE ALL REPAIRS IMMEDIATELY. REMOVE SEDIMENT FROM THE UP–SLOPE FACE OF THE FENCE BEFORE IT ACCUMULATES TO A HEIGHT EQUAL TO 1/3 THE HEIGHT OF THE FENCE. IF FENCE FABRIC TEARS, BEGINS TO DECOMPOSE, OR IN ANY WAY BECOMES INEFFECTIVE, REPLACE THE AFFECTED SECTION OF FENCE IMMEDIATELY.

SOIL STOCKPILE:
INSPECT SEDIMENT CONTROL BARRIERS (SILT FENCE OR HAY BALE) AND VEGETATION FOR DAMAGE EVERY SEVEN DAYS & AFTER EVERY RAIN EVENT. MAKE ALL REPAIRS IMMEDIATELY. REMOVE SEDIMENT FROM THE UP–SLOPE FACE OF THE SEDIMENT CONTROL BARRIER BEFORE IT ACCUMULATES TO A HEIGHT EQUAL TO 1/3 THE HEIGHT OF THE SEDIMENT CONTROL BARRIER. IF SEDIMENT CONTROL BARRIER TEARS, BEGINS TO DECOMPOSE, OR IN ANYWAY BECOMES INEFFECTIVE, REPLACE THE AFFECTED SECTION OF SEDIMENT CONTROL BARRIER IMMEDIATELY. REVEGETATE DISTURBED AREA TO STABILIZE SOIL STOCK PILE. REMOVE THE SEDIMENT CONTROL BARRIER WHEN THE SOIL STOCKPILE HAS BEEN REMOVED.

DUST CONTROL:
SCHEDULE CONSTRUCTION OPERATIONS TO MINIMIZE THE AMOUNT OF DISTURBED AREAS AT ANY ONE TIME DURING THE COURSE OF WORK. APPLY TEMPORARY SOIL STABILIZATION PRACTICES SUCH AS MULCHING, SEEDING, AND SPRAYING (WATER). STRUCTURAL MEASURES (MULCH, SEEDING) SHALL BE INSTALLED IN DISTURBED AREAS BEFORE SIGNIFICANT BLOWING PROBLEMS DEVELOP. WATER SHALL BE SPRAYED AS NEEDED. REPEAT AS NEEDED, BUT AVOID EXCESSIVE SPRAYING, WHICH COULD CREATE RUNOFF AND EROSION PROBLEMS.

CHECK DAM:
INSPECT CHECK DAMS EVERY SEVEN DAYS & AFTER EVERY RAIN EVENT. IF SIGNIFICANT SEDIMENT HAS OCCURRED BETWEEN STRUCTURES A LINER OF STONE OR OTHER SUITABLE MATERIAL SHOULD BE INSTALLED IN THAT PORTION OF THE CHANNEL. REMOVE SEDIMENT ACCUMULATED BEHIND THE DAM AS NEEDED TO ALLOW CHANNEL TO DRAIN. REPLACE STONE CHECK DAM AND PREVENT LARGE FLOWS FROM CARRYING SEDIMENT OVER THE DAM. REPLACE STONES AS NEEDED TO MAINTAIN THE DESIGN CROSS SECTION OF THE STRUCTURES. REMOVE CHECK DAMS AS PER APPROVAL OF ENGINEER.

EROSION CONTROL BLANKET:
INSPECT THE BLANKET EVERY SEVEN DAYS & AFTER EVERY RAIN EVENT. REPLACE WIRE STAPLES AS REQUIRED. REPAIR AND RESEED WHERE DAMAGE AND DAMAGED VEGETATION IS EVIDENT. WHEN DAMAGED BEYOND REPAIR OR NO LONGER FUNCTIONING, THE BLANKET SHALL BE REPLACED.

EARTH DIKE:
INSPECT ALL EARTH DIKES EVERY SEVEN DAYS & AFTER EVERY RAIN EVENT. ALL AREAS DAMAGED BY EROSION SHALL BE REPAIRED IMMEDIATELY.

TEMPORARY SWALE:
INSPECT ALL EARTH DIKES EVERY SEVEN DAYS & AFTER EVERY RAIN EVENT. ALL AREAS DAMAGED BY EROSION SHALL BE REPAIRED IMMEDIATELY.

SEDIMENT TRAP:
INSPECT ALL SEDIMENT TRAPS EVERY SEVEN DAYS & AFTER EVERY RAIN EVENT. REPAIRS SHALL BE MADE AS NEEDED. SEDIMENT SHALL BE REMOVED AND THE TRAP RESTORED TO THE ORIGINAL DIMENSIONS WHEN SEDIMENT HAS ACCUMULATED TO 1/2 OF THE DESIGN DEPTH OF THE TRAP.

STORM DRAIN INLET PROTECTION:
INSPECT ALL STORM DRAIN INLET PROTECTION DEVICES EVERY SEVEN DAYS & AFTER EVERY RAIN EVENT. MAKE REPAIRS AS NEEDED. REMOVE SEDIMENT FROM THE POOL AREA AS NECESSARY.

DEWATERING PITS:
(IF REQUIRED – INSPECT DAILY DURING OPERATION FOR CLOGGING OR OVERFLOW. CLEAR INLET AND DISCHARGE PIPES OF OBSTRUCTIONS. IF A FILTER MATERIAL BECOMES CLOGGED WITH SEDIMENT, PIT SHALL BE DISMANTLED AND CONSTRUCT NEW PITS AS NEEDED.

SNOW AND ICE CONTROL:
PARKING LOTS, ROADWAYS, AND DRIVEWAYS ADJACENT TO WATER QUALITY FILTERS SHALL NOT BE SANDED DURING SNOW EVENTS DUE TO HIGH POT

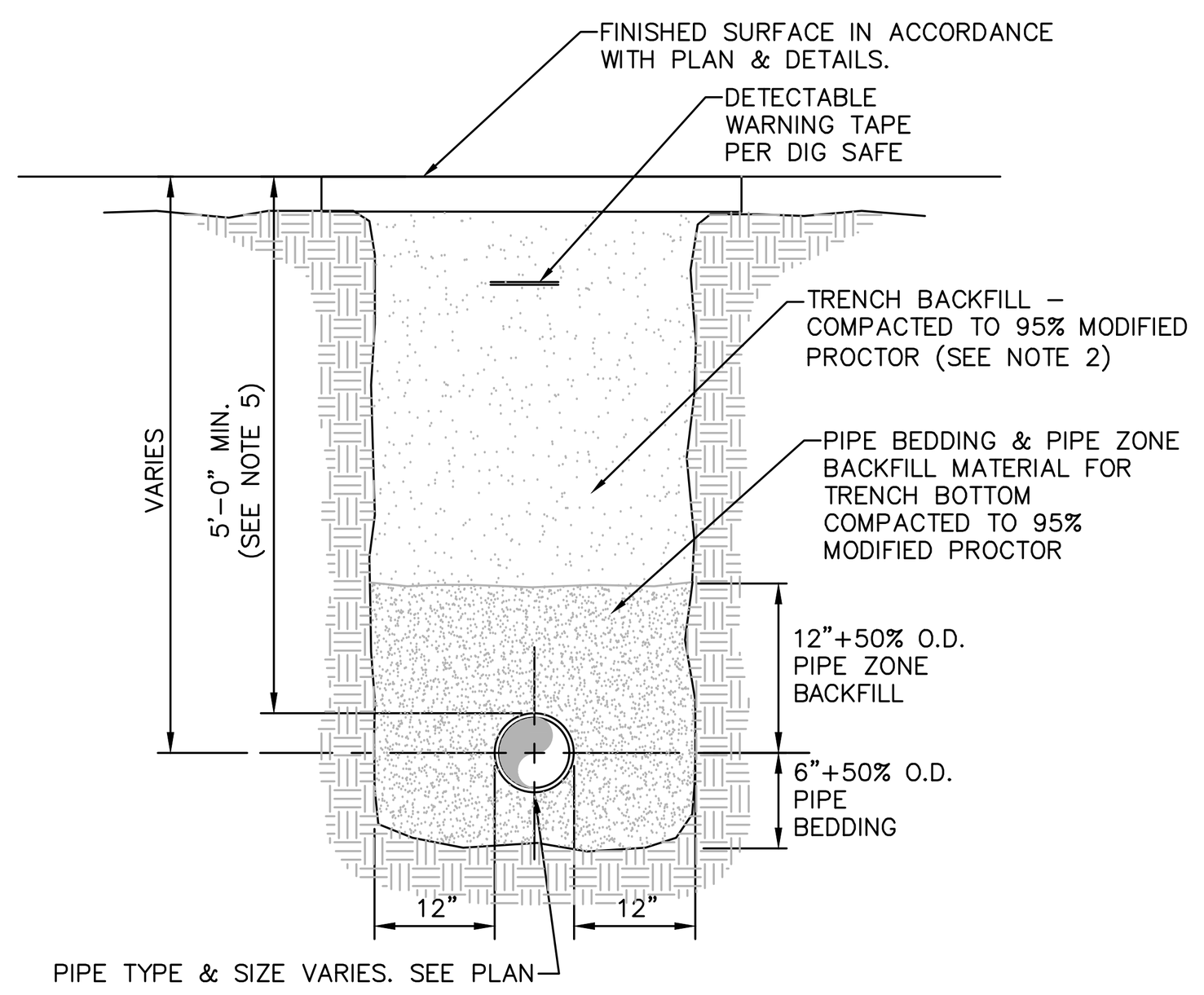

PIPE TYPE & SIZE VARIES. SEE PLAN

NOTES:

1. PIPE BEDDING & PIPE ZONE BACKFILL SHALL BE A NATURAL RUN–OF–BANK (R.O.B.) SAND OR A MIXTURE OF CRUSHED STONE AND GRAVEL, FREE OF SOFT, NONDURABLE PARTICLES, ORGANIC MATERIALS AND ELONGATED PARTICLES, AND SHALL BE WELL GRADED FROM FINE TO COARSE PARTICLES. BEDDING GRADATIONS SHALL BE APPROVED BY THE ENGINEER AND SHALL MEET THE FOLLOWING GRADATION REQUIREMENTS:

SIEVE DESIGNATION	% PASSING
3/4"	100%
NO. 40	0–70%
NO. 200	0–10%

2. TRENCH BACKFILL SHALL BE A NATURAL RUN–OF–BANK (R.O.B.) OR PROCESSED GRAVEL, OR EXCAVATED MATERIAL FREE OF SOFT, NONDURABLE PARTICLES, ORGANIC MATERIALS AND ELONGATED PARTICLES, AND SHALL BE WELL GRADED FROM FINE TO COARSE PARTICLES. TRENCH BACKFILL GRADATIONS SHALL BE APPROVED BY THE ENGINEER AND SHALL MEET THE FOLLOWING GRADATION REQUIREMENTS:

SIEVE DESIGNATION	% PASSING
4"	100%
NO. 40	0–70%
NO. 200	0–10%

IN NON–TRAFFIC UNPAVED AREAS TRENCH BACKFILL CAN BE MATERIALS EXCAVATED FROM THE TRENCH AS APPROVED BY THE ENGINEER AND COMPACTED TO 90% MODIFIED PROCTOR.

3. INSTALL CONTINUOUS DETECTABLE MARKING TAPE DURING BACKFILLING OF TRENCH FOR UNDERGROUND PIPING. LOCATE TAPE 12" BELOW FINISHED GRADE, DIRECTLY OVER PIPING, EXCEPT 6" BELOW SUBGRADE UNDER PAVEMENTS & SLAB.
4. TRENCHING SHALL BE IMPLEMENTED IN ACCORDANCE WITH O.S.H.A. STANDARDS.
5. 5'–0" MIN COVER SHALL BE APPLIED TO WATER MAIN OR SANITARY SEWER FORCE MAINS ONLY.

© 1 **PIPE TRENCH DETAIL (TYPICAL)**
SCALE: NOT TO SCALE

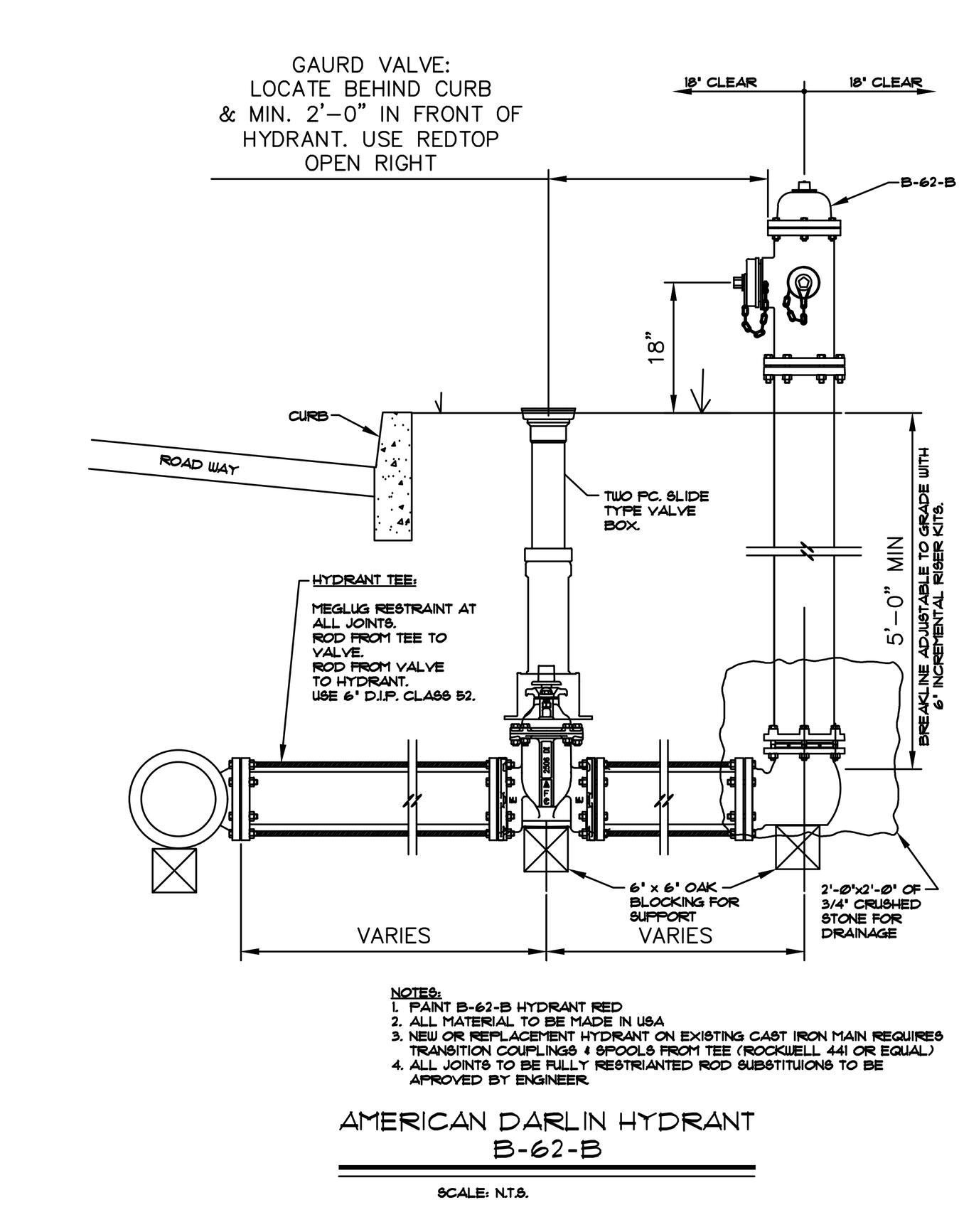

NOTES:

1. HYDRANTS SHALL BE **AMERICAN DARLIN B–62–B** OR APPROVED EQUIVALENT BY THE AUTHORITY HAVING JURISDICTION. HYDRANTS SHALL MEET REQUIREMENTS OF **AWWA STANDARD C–502**.
2. HYDRANTS SHALL BE CAST IRON BODY, DRY BARREL DESIGN, COMPRESSION–TYPE VALVE, OPENING AGAINST PRESSURE AND CLOSING WITH PRESSURE, 6–INCH MECHANICAL JOINT INLET FOOT PIECE, 5 ¼ INCH MAIN VALVE OPENING, O–RING TYPE PACKING, RATED FOR 250–PSI WORKING PRESSURE, TWO (2) 2 ½ INCH HOSE NOZZLES AND ONE (1) 4 ½ INCH PUMPER NOZZLE.
3. NOZZLE OUTLET THREADS SHALL MEET LOCAL FIRE DEPARTMENT REQUIREMENTS AND HAVE CAST IRON CAPS WITH NON–KINKING STEEL CHAINS. OPERATING AND CAP NUTS: PENTAGON 1 ½ INCH POINT TO FLAT. HYDRANT VALVES SHALL BE OPENED BY TURNING OPERATING NUT TO THE LEFT, OR **COUNTERCLOCKWISE**.
4. HYDRANTS SHALL BE TRAFFIC TYPE WITH BREAKABLE SAFETY FLANGE WITH RED EXTERIOR ALKYD GLOSS ENAMEL PAINT. HYDRANTS SHALL BE TOUCHED UP TO REMOVE ANY MARKS OR SCRAPED PAINT CAUSED BY INSTALLATION OR TRANSIT.

© 2 **HYDRANT ASSEMBLY DETAIL**
SCALE: NOT TO SCALE

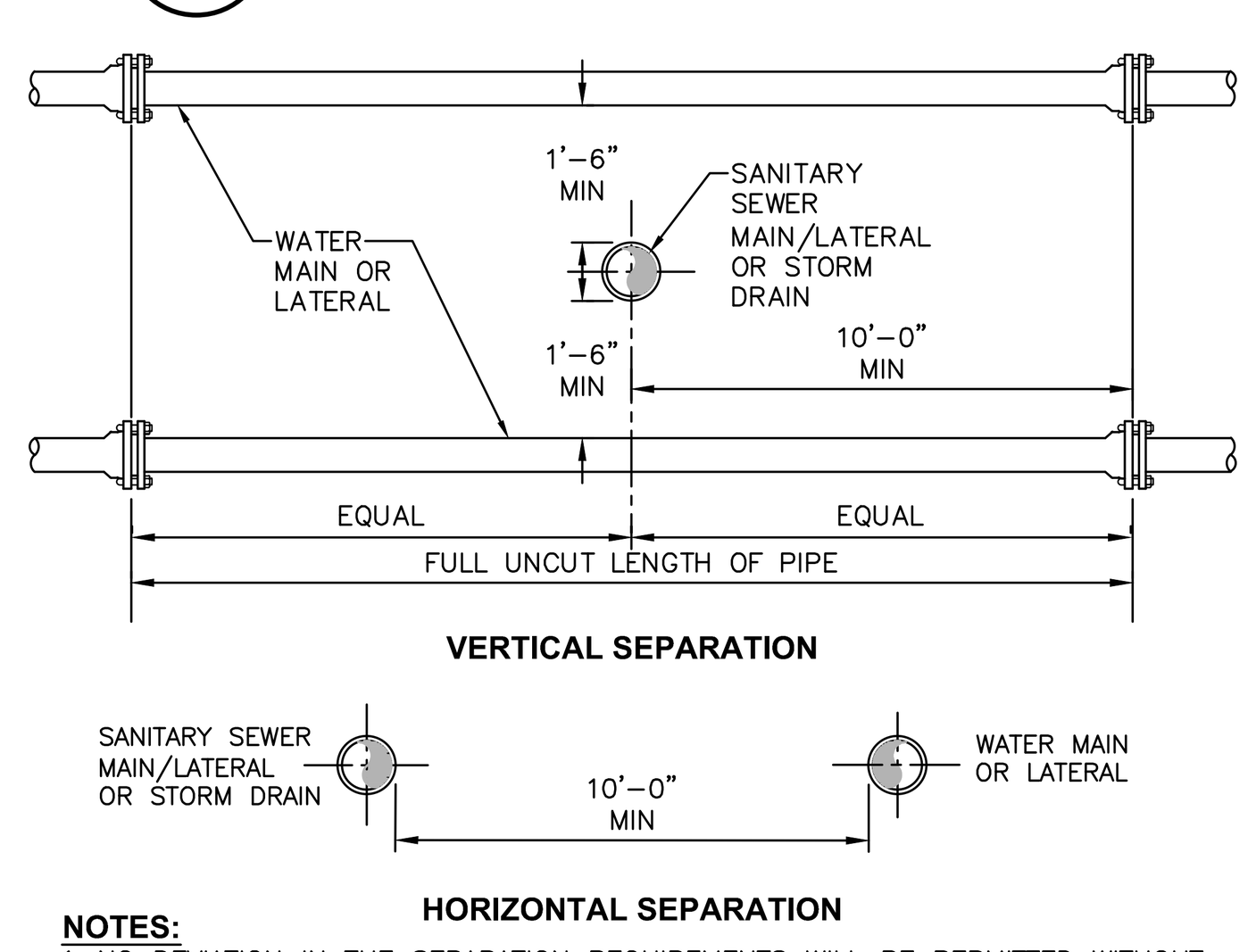

NOTES:

1. NO DEVIATION IN THE SEPARATION REQUIREMENTS WILL BE PERMITTED WITHOUT THE EXPRESS APPROVAL OF THE NYS HEALTH DEPARTMENT. OFFSETTING OF WATERLINE SHALL BE REQUIRED WHERE SEPARATION DISTANCES CANNOT BE MAINTAINED.
2. WHEN IT IS IMPOSSIBLE TO OBTAIN VERTICAL SEPARATION AS INDICATED ABOVE, BOTH THE WATER MAIN AND THE SEWER MAIN SHALL BE CONSTRUCTED OF MECHANICAL JOINT, DUCTILE IRON PIPE OR PVC WATER WORKS GRADE PRESSURE PIPE FOR 10' EACH SIDE OF CROSSING AND SHALL BE PRESSURE TESTED TO **150psi** TO ASSURE WATER TIGHTNESS.

© 3 **SANITARY/STORM SEWER AND WATERMAIN SEPARATION DETAIL**
SCALE: NOT TO SCALE

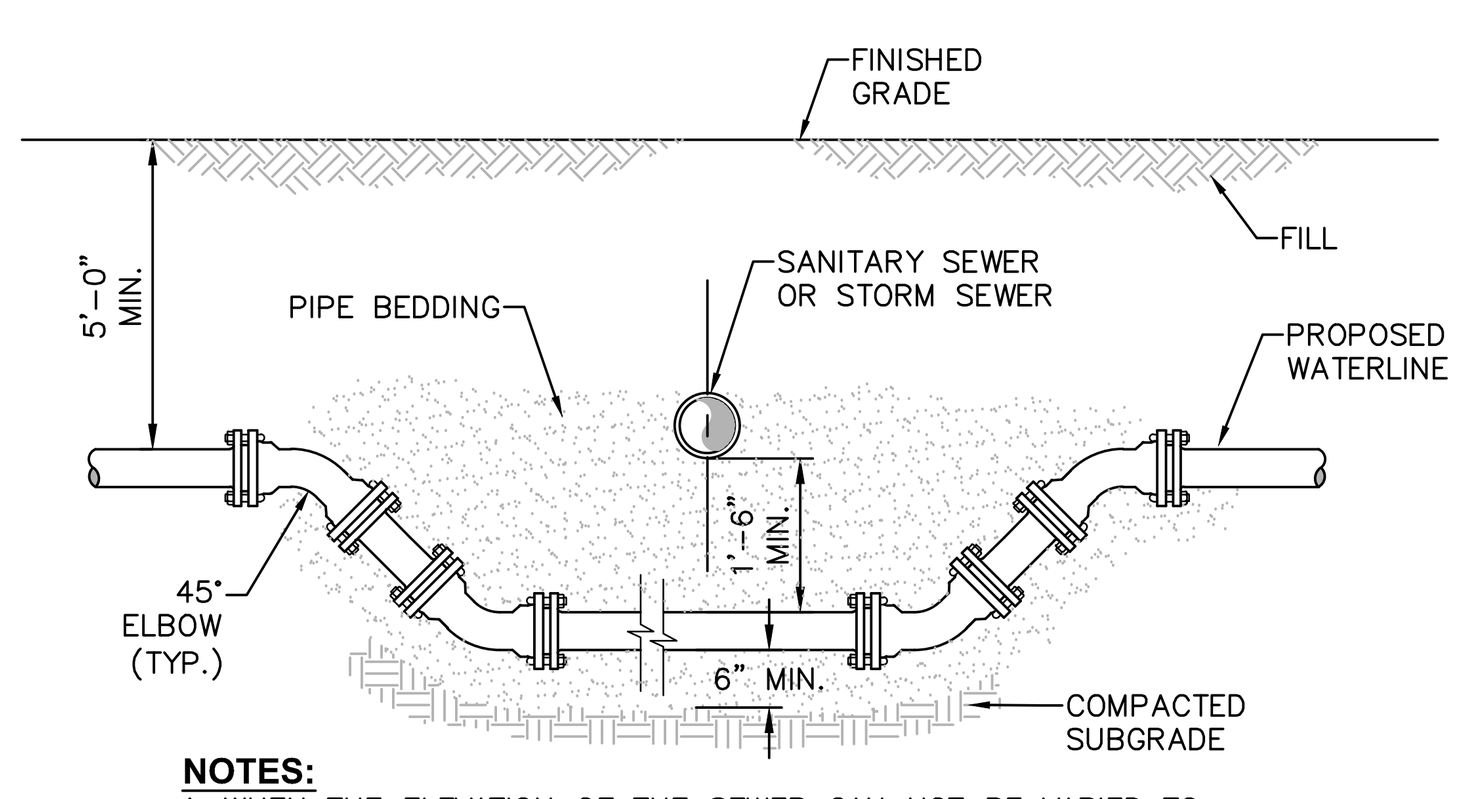

NOTES:

1. WHEN THE ELEVATION OF THE SEWER CAN NOT BE VARIED TO MEET THE ABOVE REQUIREMENTS, THE WATER MAIN SHALL BE RELOCATED TO PROVIDE THIS REQUIRED SEPARATION.
2. WHEN IT IS IMPOSSIBLE TO OBTAIN VERTICAL SEPARATION AS INDICATED ABOVE, BOTH THE WATER MAIN AND THE SEWER MAIN SHALL BE CONSTRUCTED OF MECHANICAL JOINT DUCTILE IRON PIPE OR PVC WATER WORKS GRADE PRESSURE PIPE FOR 10' EACH SIDE OF CROSSING AND SHALL BE PRESSURE TESTED TO **150psi** TO ASSURE WATER TIGHTNESS.

© 4 **WATERLINE OFFSET DETAIL**
SCALE: NOT TO SCALE

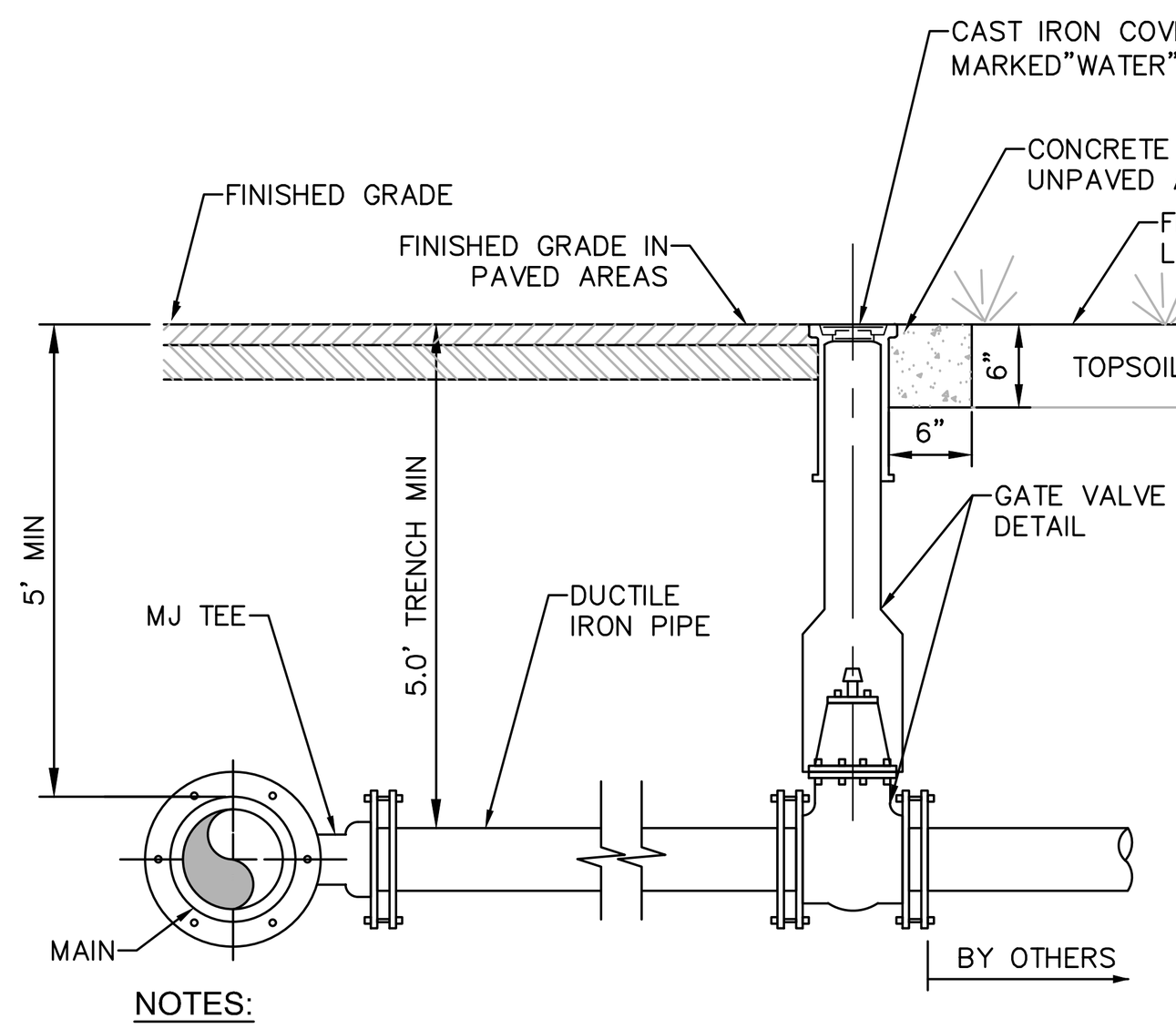

NOTES:

1. GATE VALVE & VALVE BOX SHALL BE IN ACCORDANCE WITH MUNICIPAL STANDARDS & AS MANUFACTURED BY **(MUELLER, CLOW OR WATEROUS)** OR APPROVED EQUIVALENT.

© 5 **DUCTILE IRON SERVICE PIPE**
SCALE: NOT TO SCALE

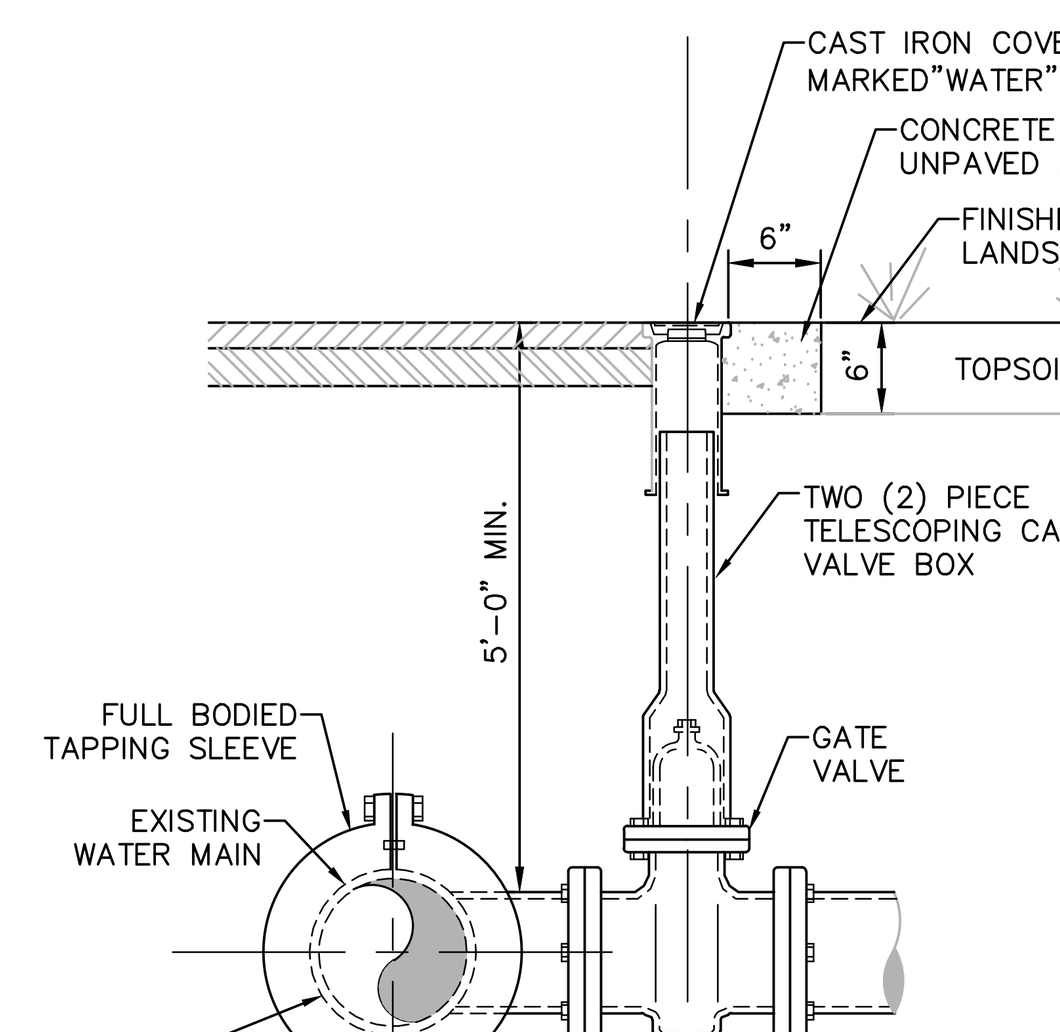

NOTES:

1. WET TAP OF PUBLIC WATER MAIN SHALL BE PERFORMED UNDER THE SUPERVISION OF THE ENGINEER, AND THE AUTHORITY HAVING JURISDICTION.
2. TAPPING SLEEVE AND VALVE SUPPORT SHALL BE COORDINATED WITH THE ENGINEER TO SUIT FIELD CONDITIONS.
3. MINIMUM DISTANCE TO JOINTS, FITTINGS, OR OTHER WET TAPS OR STOPS SHALL BE 3 FEET.
4. VALVE OPERATING DIRECTION SHALL BE **COUNTERCLOCKWISE** TO OPEN (TURNING LEFT).
5. TAPPING SLEEVE SHALL BE SELECTED TO FIT EXISTING PIPE MATERIAL (C.I., D.I., A.C.) AND OUTSIDE DIAMETERS.
6. THRUST BLOCK IS REQUIRED WHERE THE BRANCH OF THE TAPPING SLEEVE DOES NOT HAVE RESTRAINED JOINT.
7. TAPPING SLEEVE, VALVE & VALVE BOX SHALL BE IN ACCORDANCE WITH MUNICIPAL STANDARDS & AS MANUFACTURED BY **(MUELLER, CLOW OR WATEROUS)** OR APPROVED EQUIVALENT.

© 6 **TAPPING SLEEVE AND VALVE DETAIL**
SCALE: NOT TO SCALE

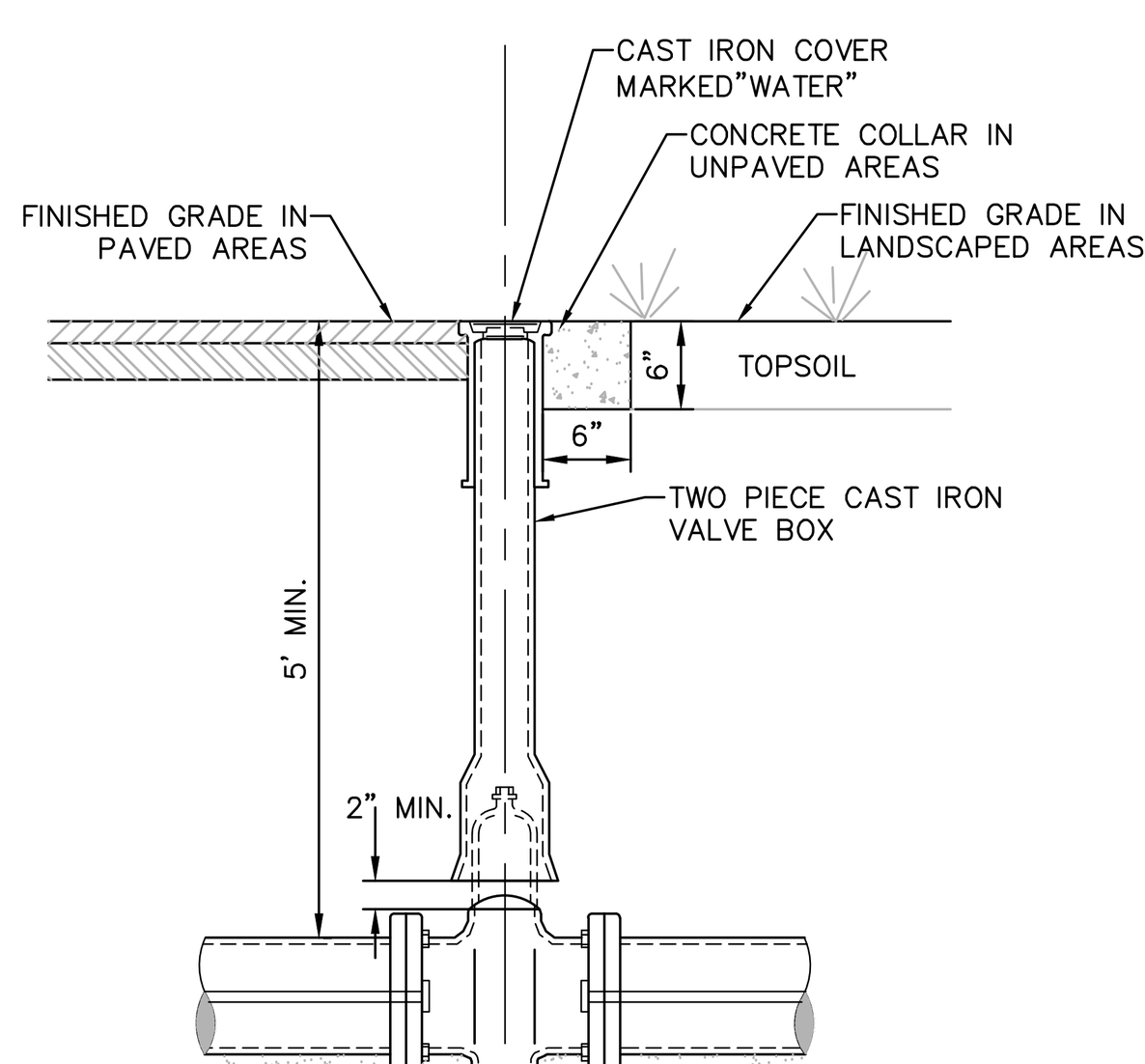

NOTES:

1. NON–RISING STEM GATE VALVE, OPERATING DIRECTION SHALL BE **COUNTERCLOCKWISE** TO OPEN.
2. MINIMUM DISTANCE TO JOINTS, FITTINGS, OR OTHER WET TAPS OR STOPS SHALL BE 3 FEET.
3. IF VALVE IS TO BE RODDED, PROVIDE VALVE WITH RODDING FLANGES OR EYEBOLTS. TWO (2) 3/4"ø GALVANIZED STEEL RODS WITH MALLEABLE IRON NUTS AT 180° SPACING SHALL BE USED FOR RODDING VALVES. FOR 12" DIA. PIPE OR LESS. FOR LARGER PIPE SIZES, SEE TABLE FOR NUMBER OF TIE RODS REQUIRED–"JOINT RESTRAINT OPTION DETAILS.)
4. GATE VALVE & VALVE BOX SHALL BE IN ACCORDANCE WITH MUNICIPAL STANDARDS & AS MANUFACTURED BY **(MUELLER, CLOW OR WATEROUS)** OR APPROVED EQUIVALENT.

© 7 **TYPICAL GATE VALVE DETAIL**
SCALE: NOT TO SCALE

SCHEDULE OF JOINT RESTRAINT BARE DIP (NOT POLYWRAPPED)
(LENGTH OF PIPE EACH SIDE OF FITTING TO BE RESTRAINED IN FEET "L")

PIPE SIZE (INCHES)	FITTING TYPE							REDUCER						
	90°	45°	22½°	11¼°	TEE	VALVE	DEAD END	6"	8"	10"	12"	16"	18"	24"
6"	43	18	8	4	29	31	31							
8"	56	23	11	5	38	41	41	17						
10"	68	28	14	7	48	50	50	31	17					
12"	81	34	16	8	57	59	59	43	31	17				
16"	106	44	21	10	76	78	78	66	57	46	33			
18"	119	49	24	12	85	88	88		69	59	48	18		
24"	156	65	31	15	116	116	116				86	63	50	
30"	192	80	38	19	142	144	144						91	50

NOTES:

1. THE LENGTH OF PIPE REQUIRING RESTRAINT IS BASED UPON THE FOLLOWING ASSUMPTIONS:
   A. BEDDING TYPE 2 – FLAT BOTTOM TRENCH, BACKFILL LIGHTLY CONSOLIDATED TO CENTER LINE OF PIPE.
   B. SOIL TYPE CLAY 1 – CLAY OF MEDIUM TO LOW PLASTICITY, LL<50, <25% COURSE PARTICLES [CL & CL–ML] :
      CL – INORGANIC CLAYS OF LOW TO MEDIUM PLASTICITY GRAVELY CLAYS, SANDY CLAYS, SILTY CLAYS. LEAN CLAYS
      ML – INORGANIC SILTS, VERY FINE SAND, ROCK FLOUR, SILTY OR CLAYEY FINE SANDS.
   C. PIPE IS BARE DUCTILE IRON PIPE (NOT POLYWRAPPED)
   D. DEPTH TO TOP OF PIPE 5'–0" MINIMUM
   E. MAXIMUM OPERATING PRESSURE OF 150 PSI
   F. FACTOR OF SAFETY OF 1.5
2. FOR END PLUGS, RESTRAIN PIPE LENGTH GIVEN FOR DEAD END FITTING.
3. THE LENGTH OF NEW PIPE TO BE RESTRAINED IS THE LENGTH FOR EACH SIDE OF THE FITTING.
4. THE ABOVE INFORMATION WAS PROVIDED USING THE THRUST RESTRAINT PROGRAM ISSUED BY THE DUCTILE IRON PIPE RESEARCH ASSOCIATION (DIPRA) AND IS BASED ON THE ASSUMPTIONS LISTED IN NOTE 1. RESTRAINED LENGTH REQUIREMENTS FOR FIELD CONDITIONS AND PIPE SIZES DIFFERING FROM THOSE LISTED ABOVE SHOULD BE EVALUATED SEPARATELY.
5. RESTRAINED JOINT PIPE AND FITTINGS SHALL BE USED ONLY AS ALLOWED BY THE PROJECT PLANS AND/OR SPECIFICATION.

© 10 **JOINT RESTRAINT SCHEDULE AND NOTES**
SCALE: NOT TO SCALE

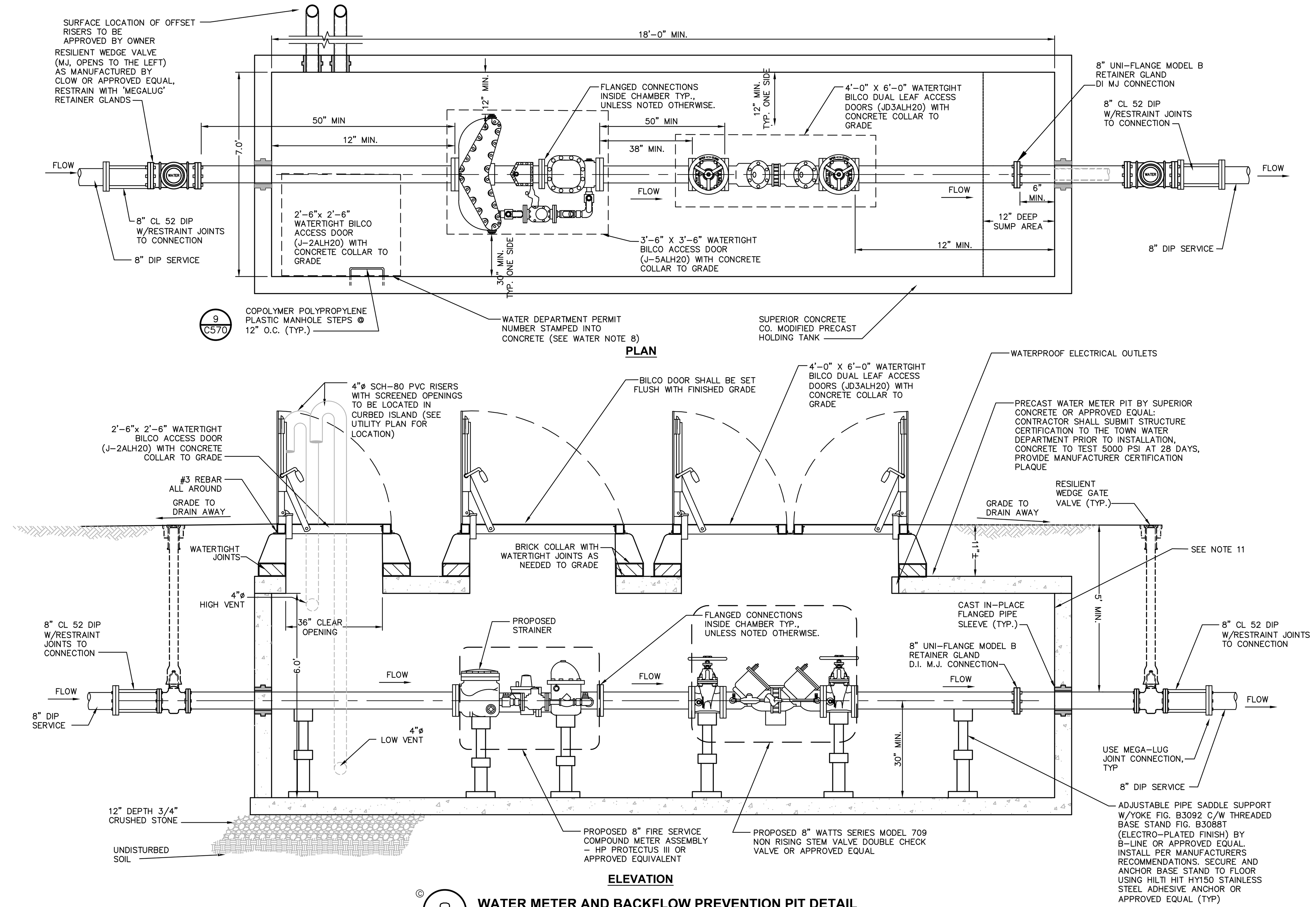

© 8 **WATER METER AND BACKFLOW PREVENTION PIT DETAIL**
SCALE: NOT TO SCALE

NOTES

1. WATER METER PIT AND ASSEMBLY SHALL BE SUBJECT TO REVIEW AND FINAL APPROVAL BY THE CITY OF POUGHKEEPSIE WATER DEPARTMENT. WATER METER SHALL BE A SENSUS OMNI OR APPROVED EQUAL.
2. WATER METER SHALL BE PROVIDED WITH A REMOTE READING SYSTEM WITH BRONZE WATERTIGHT ENCLOSURE. WATER PROOF REGISTERS SHALL BE PROVIDED. LOCATION SHALL BE APPROVED BY THE CITY OF POUGHKEEPSIE WATER DEPARTMENT PRIOR TO CONSTRUCTION.
3. AN ALUMINUM WARNING PLATE SHALL BE RIVETED OR OTHERWISE PERMANENTLY ATTACHED TO THE MANHOLE COVER. THE PLATE SHALL BE A MINIMUM OF 12"x12" AND SHALL BE ENGRAVED WITH THE FOLLOWING LANGUAGE: "WARNING: CONFINED SPACE – ENTRY PROHIBITED WITHOUT AUTHORIZATION – CALL OWNER FOR APPROVAL TO ACCESS". VENTILATION SHALL CONFORM TO EXISTING LOCAL AND/OR STATE CODES AND AS PER SECTION 6.2.5 OF "RECOMMENDED STANDARDS FOR WATER WORKS – 1997" (TEN STATES STANDARDS).
4. PREPARED SURFACE (I.E., BOTTOM) OF EXCAVATION FOR PLACEMENT OF WATER METER PIT SHALL CONSIST OF A MINIMUM 6" DEPTH OF 3/4" CRUSHED STONE, LEVELED AND LAID OVER STABLE NATIVE SOIL. IF EXCAVATION REVEALS UNSTABLE SOIL MATERIAL, THIS BEDDING REQUIREMENT SHALL BE MODIFIED BY THE PROJECT ENGINEER.
5. WHEN INSTALLING TURBO METERS WITH A STRAINER, A MINIMUM OF FIVE (5) PIPE DIAMETERS OF STRAIGHT RUN PIPE OR EQUIVALENT FULL OPEN COMPONENTS IS REQUIRED UPSTREAM OF THE METER INLET FLANGE. A MINIMUM OF THREE (3) PIPE DIAMETERS OF STRAIGHT PIPE OR EQUIVALENT IS REQUIRED DOWN STREAM OF THE METER.
6. DO NOT INSTALL ELBOWS, BENDS, NONCONCENTRIC REDUCERS, CHECK VALVES, BACK FLOW PREVENTORS AND/OR PERSSURE REDUCING DEVICES WITHIN TEN (10) PIPE DIAMETERS UPSTREAM OR FIVE (5) PIPE DIAMETERS DOWNSTREAM OF THE METER.
7. EXTERIOR OF METER PIT SHALL RECEIVE TWO COATS OF BITUMINOUS COATING.
8. WITHIN 30 DAYS OF INSTALLATION, THE BACKFLOW PREVENTION DEVICE SHALL BE TESTED BY A CERTIFIED TESTER. FOLLOWING TESTING, A NYS DOH–1013 REPORT MUST BE COMPLETED AND SUBMITTED TO THE CITY OF POUGHKEEPSIE, TOWN CLERK AND DUTCHESS COUNTY HEALTH DEPARTMENT TO CERTIFY THAT DEVICE WAS INSTALLED PER APPROVED PLANS.
9. ALL BACKFLOW PREVENTION DEVICES MUST BE TESTED AT LEAST ANNUALLY BY A NYS CERTIFIED TESTER WITH A COPY OF THE INSPECTION AND TEST REPORT (DOH–1013) FORWARDED TO CITY OF POUGHKEEPSIE, AND THE DUTCHESS COUNTY DEPARTMENT OF HEALTH.
10. REINFORCEMENT FOR MANHOLE COMPONENTS SHALL BE DESIGNED BY A LICENSED NEW YORK STATE PROFESSIONAL ENGINEER PRIOR TO CONSTRUCTION. SHOP DRAWINGS SHALL BE SUBMITTED FOR REVIEW. STRUCTURE SHALL BE DESIGNED FOR HS20–44 VEHICULAR LOADING PLUS 25% IMPACT.
11. PROVIDE WATERPROOF ELECTRIC OUTLET FOR SUMP PUMP IN THE EVENT WATER ACCUMULATES IN SUMP AREA.

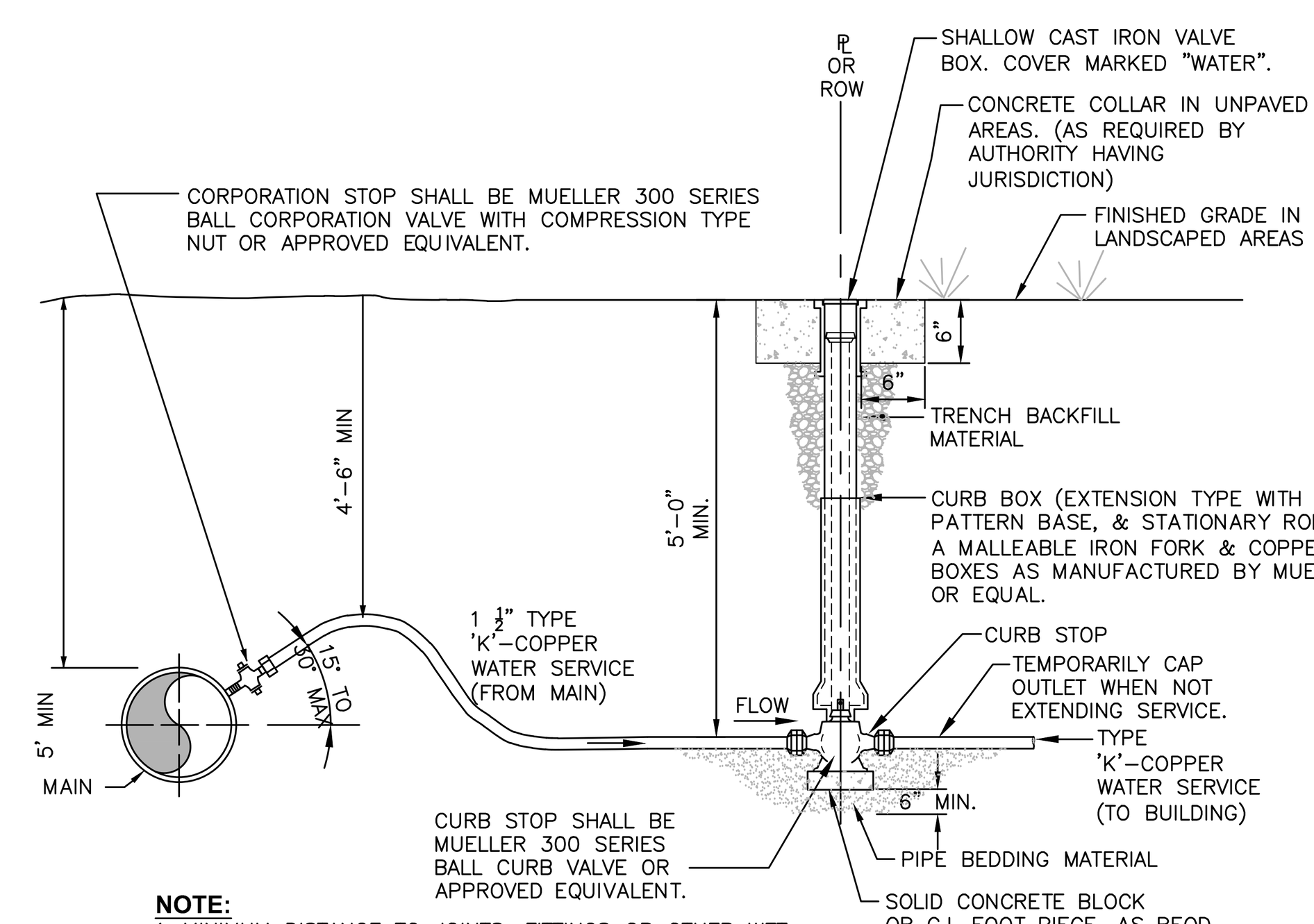

NOTE:

1. MINIMUM DISTANCE TO JOINTS, FITTINGS OR OTHER WET TAPS OR STOPS SHALL BE MAINTAINED IN ACCORDANCE WITH REGULATORY AGENCY.

© 9 **COPPER WATER SERVICE**
SCALE: NOT TO SCALE

LaBella
Powered by partnership.

21 Fox Street
Poughkeepsie, NY 12601
845-454-3980
labellapc.com

NOT FOR CONSTRUCTION
EXP: ##/##/20##
EXP: ##/##/20##

CERTIFICATE OF AUTHORIZATION NUMBER:
PROFESSIONAL ENGINEERING: 0021272
LAND SURVEYING: 0021271
GEOLOGICAL: 0021659

It is a violation of New York Education Law Art. 145 Sec. 7209 & Art. 147 Sec. 7307, for any person, unless acting under the direction of a licensed architect, professional engineer, or land surveyor, to alter an item in any way. If an item bearing the seal of an architect, engineer, or land surveyor is altered; the altering architect, engineer, or land surveyor shall affix to the item their seal and notation "altered by" followed by their signature and date of such alteration, and a specific description of the alteration.

© 2025 LaBella Associates

MASELO REALTY LLC
18 EASTVIEW ROAD
MONSEY, NY 10952

HIGHVIEW AT THE FALLKILL CREEK
CITY OF POUGHKEEPSIE
DUTCHESS COUNTY, NEW YORK

NO:	DATE:	DESCRIPTION:
Revisions		

PROJECT NUMBER: CZ81947.00
DRAWN BY: JRR
REVIEWED BY: KGA
ISSUED FOR: PLANNING BOARD REVIEW
DATE: 10/28/2025
DRAWING NAME:

WATER DETAILS 1

DRAWING NUMBER:

C560

Drawing Name: B:\GLOBAL\Legacy\Chazen\Projects\81900-81999\81947.00 - Highview II\DWG\01_C560_81747-00_WATRD.dwg
Xref's Attached: X-BORDER_81947-00_30x42
Date Printed: Oct 27, 2025, 4:26pm

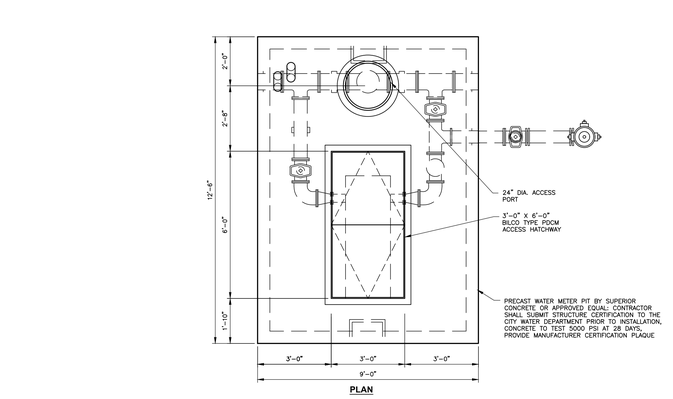

PLAN

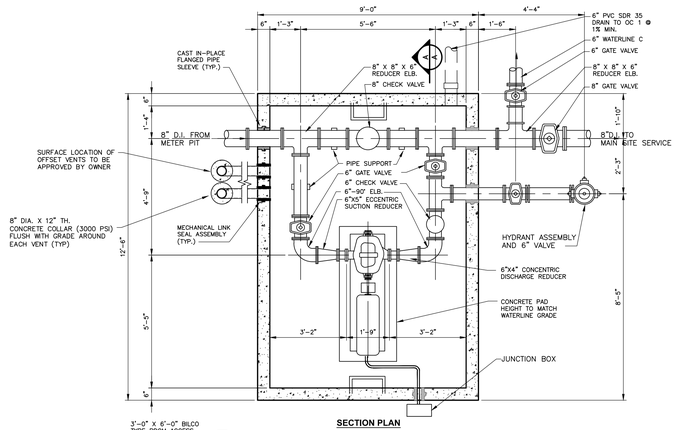

SECTION PLAN

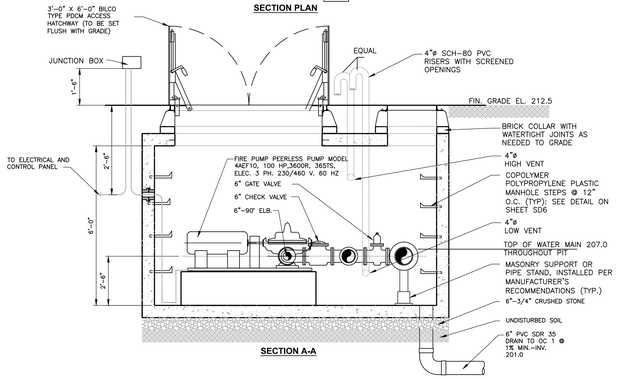

SECTION A-A

NOTES

1. PUMP CHAMBER AND ASSEMBLY AND SHOP DRAWINGS SHALL BE SUBJECT TO REVIEW AND FINAL APPROVAL BY THE CITY OF POUGHKEEPSIE ENGINEERING DEPARTMENT.
2. FIRE PUMP FURNISHED FOR FIRE PROTECTION SERVICE SHALL BE SUPPLIED WITH SPECIFIED DRIVERS, CONTROLS AND PUMP ACESSORIES AS DESCRIBED IN APPENDIX TO ENGINEERING REPORT
3. AN ALUMINUM WARNING PLATE SHALL BE RIVETED OR OTHERWISE PERMANENTLY ATTACHED TO THE MANHOLE COVER. THE PLATE SHALL BE A MINIMUM OF 12"x12" AND SHALL BE ENGRAVED WITH THE FOLLOWING LANGUAGE: "WARNING: CONFINED SPACE – ENTRY PROHIBITED WITHOUT AUTHORIZATION – CALL OWNER FOR APPROVAL TO ACCESS". VENTILATION SHALL CONFORM TO EXISTING LOCAL AND/OR STATE CODES AND AS PER SECTION 6.2.5 OF "RECOMMENDED STANDARDS FOR WATER WORKS – 1997" (TEN STATES STANDARDS).
4. PREPARED SURFACE (I.E., BOTTOM) OF EXCAVATION FOR PLACEMENT OF PUMP CHAMBER SHALL CONSIST OF A MINIMUM 9" DEPTH OF 3/4" CRUSHED STONE, LEVELED AND LAID OVER STABLE NATIVE SOIL. IF EXCAVATION REVEALS UNSTABLE SOIL MATERIAL, THIS BEDDING REQUIREMENT SHALL BE MODIFIED BY THE PROJECT ENGINEER.
5. FIRE PUMP PIT TO BE PROVIDED WITH STEPS.
6. ALL ELECTRICAL SHALL BE INSTALLED AS PER THE NATIONAL ELECTRIC CODE, LATEST EDITION.
7. INSTALLATION AND TESTING TO BE CERTIFIED COMPLETE BY A NYS LICENSED PROFESSIONAL ENGINEER.

1 PUMP CHAMBER DETAIL
SCALE: NOT TO SCALE

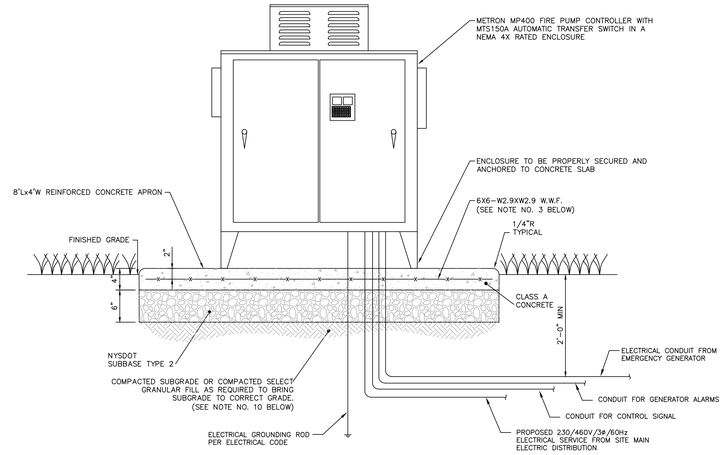

1. THE METRON COMBINATION FIRE PUMP CONTROLLER/TRANSFER SWITCH IS A METRON MODEL MP400 WITH INTEGRATED MTS150A AUTOMATIC TRANSFER SWITCH IN A NEMA 4X RATED ENCLOSURE. THE UNIT IS UNDERWRITER'S LABORATORIES (UL) AND FACTORY MUTUAL (FM) APPROVED AND MEETS ALL THE REQUIREMENTS OF NFPA FOR CENTRIFUGAL FIRE PUMPS.
2. THE CONTROLLER/TRANSFER SWITCH UNIT SHALL BE MANUFACTURED BY METRON, INC. AND BE EQUIPPED WITH ALL THE FEATURES DESCRIBED IN THE ENGINEER'S REPORT. THE UNIT PROVIDES OPERATION OF THE ELECTRIC FIRE PUMP MOTOR FROM AN ALTERNATE SOURCE WHEN THE NORMAL POWER SOURCE FAILS.
3. THE FIRE PUMP IS A PEERLESS HORIZONTAL SPLIT CASE SINGLE STAGE FIRE PUMP MODEL 4AEF10 EQUIPPED WITH A 3550 RPM, 3PH, 230/460V, 60 HZ ELECTRIC MOTOR; THE PUMP SHALL BE EQUIPPED WITH ALL ANCILLARY ACCESSORIES DESCRIBED IN THE ENGINEER'S REPORT.
4. THE EMERGENCY GENERATOR SET SHALL BE A KOHLER MODEL 230REOZJB, 230 KW, DIESEL UNIT WITH SOUND ATTENUATED ENCLOSURE AND DUAL-WALL SUB-BASE TANK, OR APPROVED EQUAL. THE GENETAROR IS TO BE EQUIPPED WITH ALL FEATURES DESCRIBED IN THE ENGINEER'S REPORT.
5. THIS DETAIL IS PROVIDED TO ILLUSTRATE THE INTENDED LAYOUT. THE CONTRACTOR SHALL PROVIDE SHOP DRAWINGS SHOWING THE ARRANGEMENT AND LOCATIONS OF ALL COMPONENTS, CONDUITS AND EQUIPMENT FOR THE FIRE PUMP CONTROLLER/AUTO TRANSFER SWITCH UNIT FOR A COMPLETE AND FUNCTIONAL INSTALLATION.
6. THE CONTRACTOR SHALL SUBMIT A COPY OF THE SHOP DRAWINGS TO THE CITY OF POUGHKEEPSIE ENGINEER FOR REVIEW.
7. THE INSTALLATION SHALL COMPLY WITH ALL LOCAL, STATE AND NEC ELECTRICAL CODE AND NFPA REQUIREMENTS.
8. INSTALL ALL WIRING IN RIGID GALV. STEEL CONDUITS.
9. ALL WIRING SHALL BE ADEQUATELY SIZED TO CARRY REQUIRED LOADS AS PER ELECTRICAL CODES.

2 ELECTRIC FIRE PUMP CONTROLLER AND AUTO-TRANSFER SWITCH
SCALE: NOT TO SCALE

CONCRETE NOTES:

1. MATERIAL AND METHODS OF CONSTRUCTION SHALL BE IN CONFORMANCE WITH THE NEW YORK STATE DEPARTMENT OF TRANSPORTATION (NYSDOT) STANDARD SPECIFICATIONS FOR CONSTRUCTION AND MATERIALS, DATED JANUARY 2, 2002, AND ALL ADDENDA THERETO; THE ONLY EXCEPTION BEING THAT THE WORK OF THIS CONTRACT SHALL BE MEASURED IN ENGLISH UNITS.
2. ALL CONCRETE SHALL BE CLASS A CONCRETE. CONCRETE MATERIALS, PLACEMENT, AND CONSTRUCTION SHALL CONFORM WITH SECTION 500 OF THE ABOVE REFERENCED NYSDOT STANDARD SPECIFICATIONS.
3. REINFORCING STEEL FOR CONCRETE SHALL CONFORM WITH SECTION 556 – REINFORCING STEEL FOR CONCRETE STRUCTURES OF THE ABOVE REFERENCED NYSDOT STANDARD SPECIFICATIONS AND AS SPECIFICALLY CALLED OUT IN THE DRAWINGS.
4. ALL EXPOSED SURFACED SHALL HAVE A BROOM TEXTURED FINISH.
5. EXPANSION JOINTS SHALL BE LOCATED A MAXIMUM OF 20'-0" ON CENTER, OR AS INDICATED ON PLANS.
6. JOINTS SHALL NOT BE SAW CUT.
7. EXPOSED CONCRETE SURFACES SHALL BE TREATED WITH "SUREBOND"/"SAFEBOND" SB-7000 INTENSIFIER BRIGHT PROTECTOR AND SIDEWALK SEALER, OR EQUAL. RATE AND METHOD OF APPLICATION SHALL BE IN ACCORDANCE WITH MANUFACTURE'S RECOMMENDATIONS.
8. SUBBASE MATERIAL SHALL CONFORM WITH SECTION 304 OF THE ABOVE REFERENCED NYSDOT STANDARD.
9. WHERE IT IS NECESSARY TO PLACE FILL FOR PURPOSE OF BRINGING THE SUBGRADE ELEVATION UP TO A SPECIFIED GRADE, THE FILL MATERIAL PLACED SHALL BE IN CONFORMATION WITH SECTION 203-EXCAVATION AND EMBANKMENT OF THE ABOVE REFERENCED NYSDOT STANDARD SPECIFICATIONS.
10. ALL WORK SHALL CONFORM WITH SECTION 608-SIDEWALK, DRIVEWAYS, AND BICYCLE PATHS OF THE ABOVE REFERENCED NYSDOT STANDARD SPECIFICATIONS.

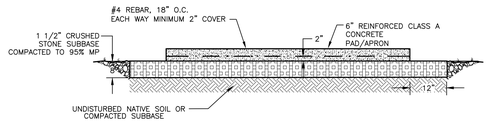

NOTES:

1. THE CONCRETE PAD DIMENSIONS SHALL BE 16'Lx10'W.
2. THE CONTRACTOR SHALL MAKE PROVISIONS TO PROVIDE ALL SLEEVES REQUIRED FOR THE PASSAGE OF ALL CONDUITS IN THE CONCRETE SLAB.

3 GENERATOR PAD DETAIL
SCALE: NOT TO SCALE

LaBella
Powered by partnership.

21 Fox Street
Poughkeepsie, NY 12601
845-454-3980

labellapc.com

NOT FOR CONSTRUCTION
EXP. ##/##/20##
EXP. ##/##/20##

CERTIFICATE OF AUTHORIZATION NUMBER:
PROFESSIONAL ENGINEERING: 0021272
LAND SURVEYING: 0021271
GEOLOGICAL: 0021659

It is a violation of New York Education Law Art. 145 Sec. 7209 & Art. 147 Sec. 7307, for any person, unless acting under the direction of a licensed architect, professional engineer, or land surveyor, to alter an item in any way. If an item bearing the seal of an architect, engineer, or land surveyor is altered; the altering architect, engineer, or land surveyor shall affix to the item their seal and notation "altered by" followed by their signature and date of such alteration, and a specific description of the alteration.

© 2025 LaBella Associates

MASELO REALTY LLC
18 EASTVIEW ROAD
MONSEY, NY 10952

HIGHVIEW AT THE FALLKILL CREEK
CITY OF POUGHKEEPSIE
DUTCHESS COUNTY, NEW YORK

NO:	DATE:	DESCRIPTION:
Revisions		

PROJECT NUMBER: CZ81947.00
DRAWN BY: JRR
REVIEWED BY: KGA
ISSUED FOR: PLANNING BOARD REVIEW
DATE: 10/28/2025
DRAWING NAME:

WATER DETAILS 2

DRAWING NUMBER:

C561

Drawing Name: B:\CLOBAL\Legacy\Chazen\Projects\81900-81999\81947.00 - Highview II\DWG\01_C561_81747-00_VIATRD.dwg
Xref's Attached: 1:ASCREER_81947-20_30x42
Date Printed: 10/27/2025 4:06pm

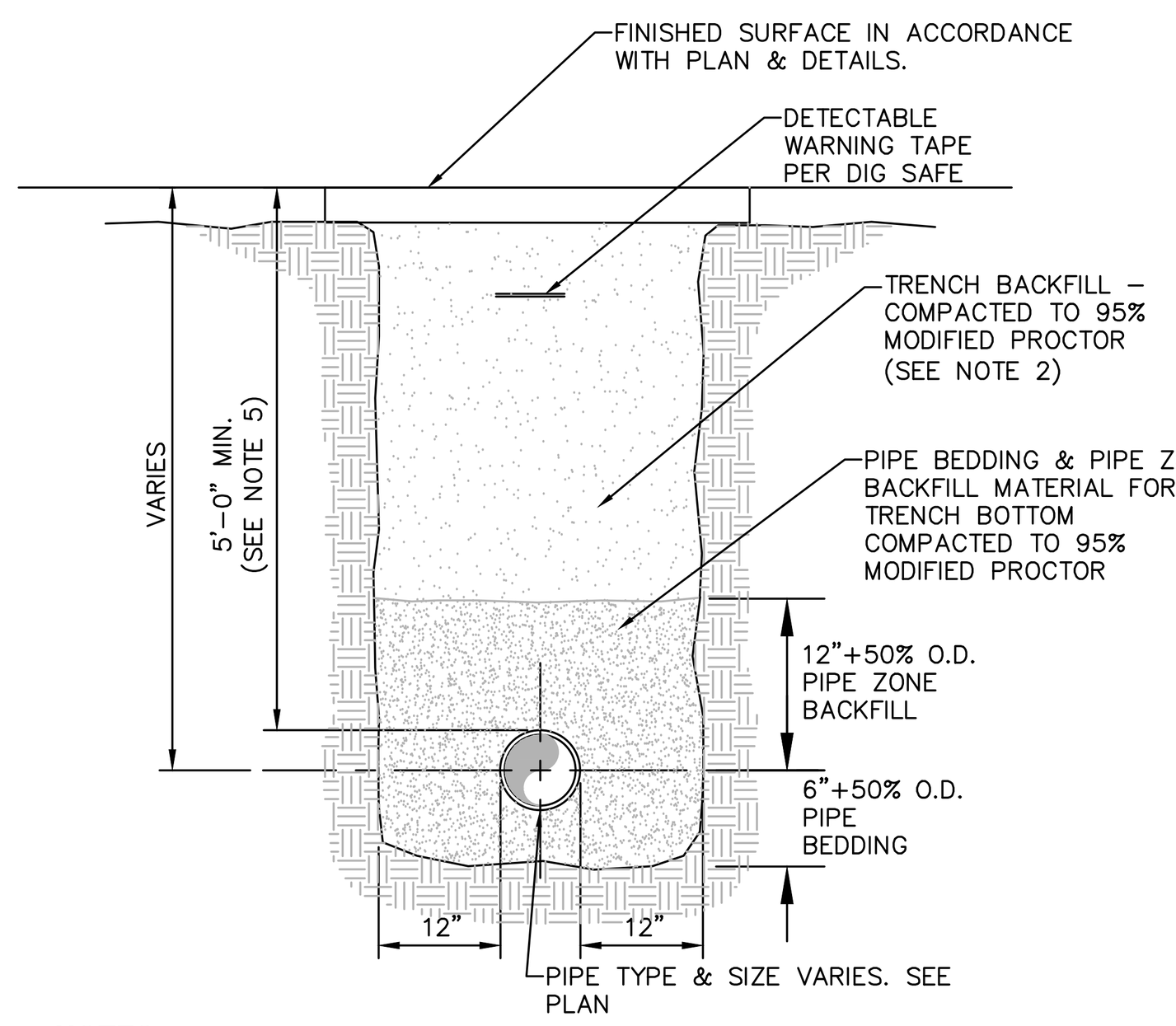

NOTES:

1. PIPE BEDDING & PIPE ZONE BACKFILL SHALL BE A NATURAL RUN–OF–BANK (R.O.B.) SAND OR A MIXTURE OF CRUSHED STONE AND GRAVEL, FREE OF SOFT, NONDURABLE PARTICLES, ORGANIC MATERIALS AND ELONGATED PARTICLES, AND SHALL BE WELL GRADED FROM FINE TO COARSE PARTICLES. BEDDING GRADATIONS SHALL BE APPROVED BY THE ENGINEER AND SHALL MEET THE FOLLOWING GRADATION REQUIREMENTS:

SIEVE DESIGNATION	% PASSING
3/4"	100%
NO. 40	0–70%
NO. 200	0–10%

2. TRENCH BACKFILL SHALL BE A NATURAL RUN–OF–BANK (R.O.B.) OR PROCESSED GRAVEL, OR EXCAVATED MATERIAL FREE OF SOFT, NONDURABLE PARTICLES, ORGANIC MATERIALS AND ELONGATED PARTICLES, AND SHALL BE WELL GRADED FROM FINE TO COARSE PARTICLES. TRENCH BACKFILL GRADATIONS SHALL BE APPROVED BY THE ENGINEER AND SHALL MEET THE FOLLOWING GRADATION REQUIREMENTS:

SIEVE DESIGNATION	% PASSING
4"	100%
NO. 40	0–70%
NO. 200	0–10%

IN NON–TRAFFIC UNPAVED AREAS TRENCH BACKFILL CAN BE MATERIALS EXCAVATED FROM THE TRENCH AS APPROVED BY THE ENGINEER AND COMPACTED TO 90% MODIFIED PROCTOR.

3. INSTALL CONTINUOUS DETECTABLE MARKING TAPE DURING BACKFILLING OF TRENCH FOR UNDERGROUND PIPING. LOCATE TAPE 12" BELOW FINISHED GRADE, DIRECTLY OVER PIPING, EXCEPT 6" BELOW SUBGRADE UNDER PAVEMENTS & SLAB.
4. TRENCHING SHALL BE IMPLEMENTED IN ACCORDANCE WITH O.S.H.A. STANDARDS.
5. 5'–0" MIN COVER SHALL BE APPLIED TO WATER MAIN OR SANITARY SEWER FORCE MAINS ONLY.

©
1 PIPE TRENCH DETAIL (TYPICAL)
SCALE: NOT TO SCALE

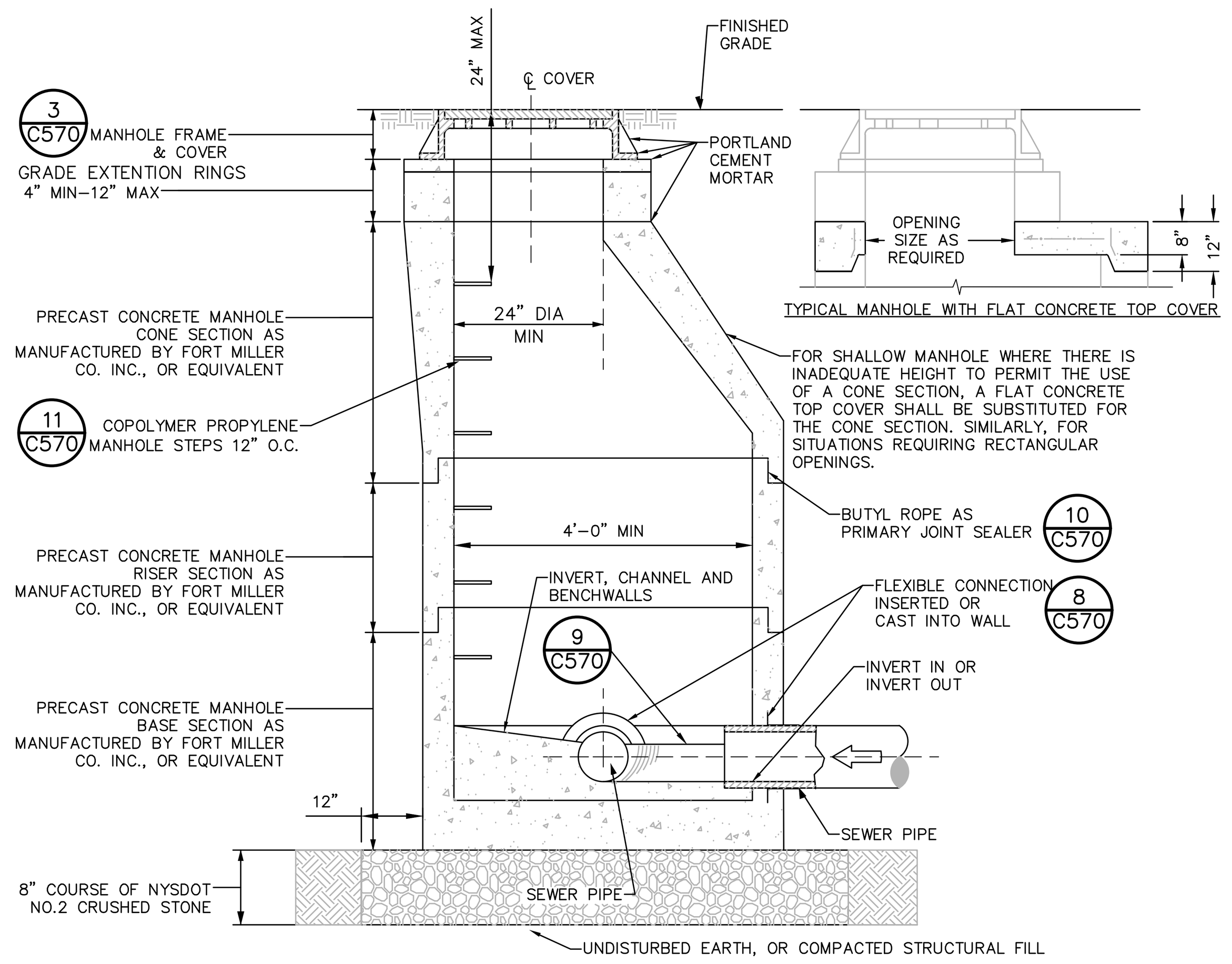

NOTES:

USE ONLY WET–CAST UNITS. DRY–CAST NOT ACCEPTABLE

1.

CONE DIMENSIONS	
DIAM. OPENING	HEIGHT
24"	24" OR 42"
30"	34"

2. INVERT SHALL BE FILLETED.
3. REINFORCEMENT FOR MANHOLE COMPONENTS SHALL BE DESIGNED BY A LICENSED NEW YORK STATE PROFESSIONAL ENGINEER PRIOR TO CONSTRUCTION. SHOP DRAWINGS SHALL BE SUBMITTED FOR REVIEW. STRUCTURE SHALL BE DESIGNED FOR HS20–44 VEHICULAR LOADING PLUS 25% IMPACT.
4. CONCRETE TO TEST **4,500 PSI** AT 28 DAYS IN CONFORMANCE WITH **A.S.T.M. C–478.**
5. BENCH SHALL BE BUILT FOR FLOW BETWEEN INLET AND OUTLET.
6. EACH MANHOLE EXTERIOR SHALL RECEIVE TWO BITUMINOUS COATS.

©
2 PRECAST CONCRETE MANHOLE
SCALE: NOT TO SCALE

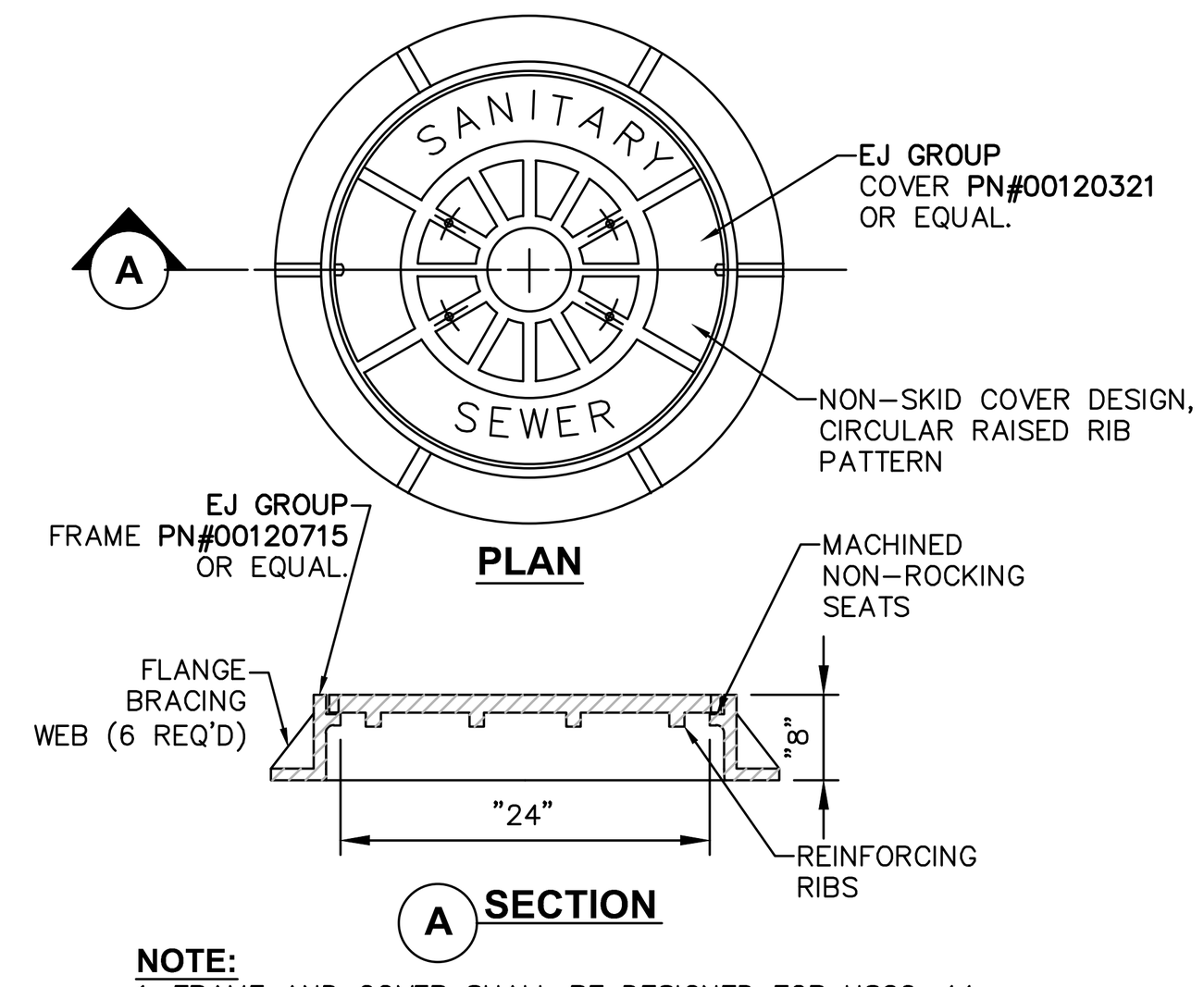

NOTE:
1. FRAME AND COVER SHALL BE DESIGNED FOR HS20–44 VEHICLE LOADING AND 25% IMPACT.

©
3 HEAVY DUTY STANDARD CAST IRON MH COVER
SCALE: NOT TO SCALE

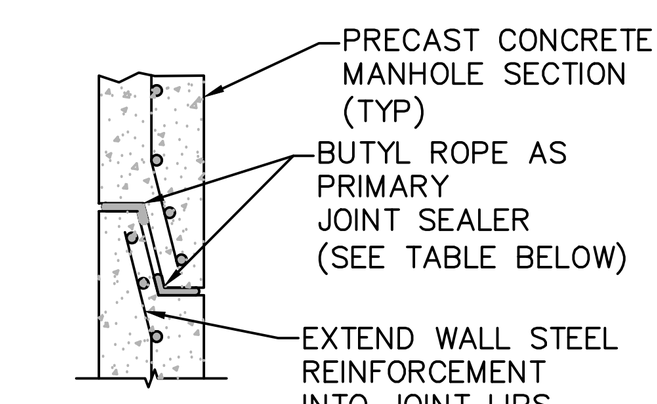

MANHOLE INSIDE DIAMETER	SIZE OF BUTYL ROPE JOINT SEALER
4'–0"	1"
5'–0" & LARGER	1 1/2"

©
4 MANHOLE JOINT
SCALE: NOT TO SCALE

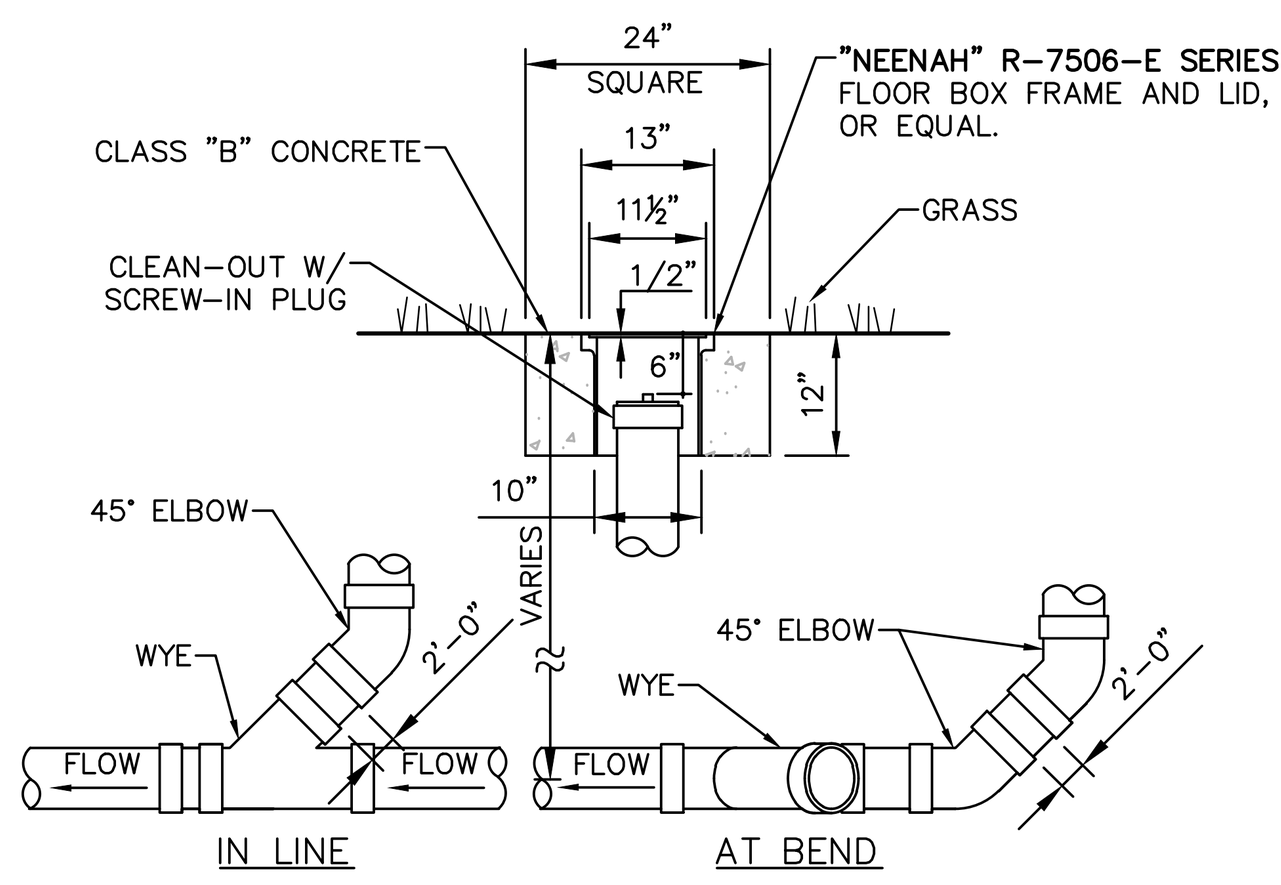

NOTES:
1. SEWER PIPE FITTINGS TO BE **ASTM D–3033 OR D–3034** SDR–35.
2. TO BE USED FOR GRAVITY PORTION OF SANITARY SYSTEM AS WELL AS THE STORM ROOF DRAINAGE SYSTEM.

©
5 CLEAN OUT - NON TRAFFIC AREAS
SCALE: NOT TO SCALE

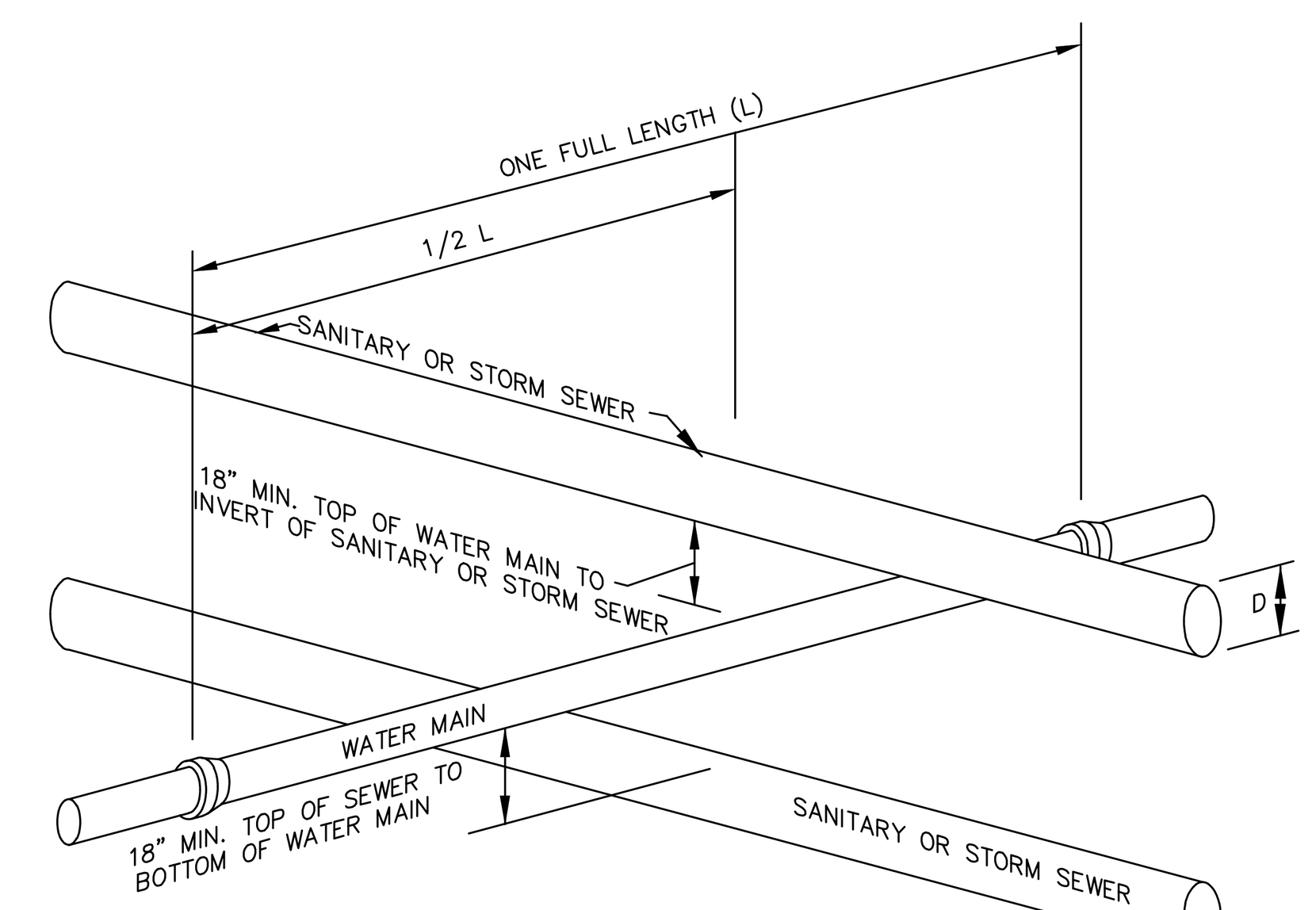

NOTES:
IF 18" VERTICAL SEPARATION CAN NOT BE ACHIEVED AT LOCATIONS OF WATER MAIN & SEWER CROSSINGS, CONTRACTOR SHALL CONSTRUCT EITHER OF THE FOLLOWING OPTIONS:
1. CONSTRUCT SEWER OF PVC WATERWORKS GRADE PRESSURE PIPE MATERIAL 10' ON EACH SIDE OF THE WATER MAIN AND TEST TO 150PSI TO ASSURE TIGHTNESS.
2. EITHER THE WATER MAIN OR THE SEWER LINE MAY BE ENCASED IN A WATER TIGHT CARRIER PIPE WHICH EXTENDS 10 FEET ON BOTH SIDES OF THE CROSSING. THE CARRIER PIPE SHALL BE OF MATERIAL APPROVED FOR THE USE IN WATER MAIN CONSTRUCTION.

©
6 SECTION WATER/SEWER SEPARATION REQUIREMENTS
SCALE: NOT TO SCALE

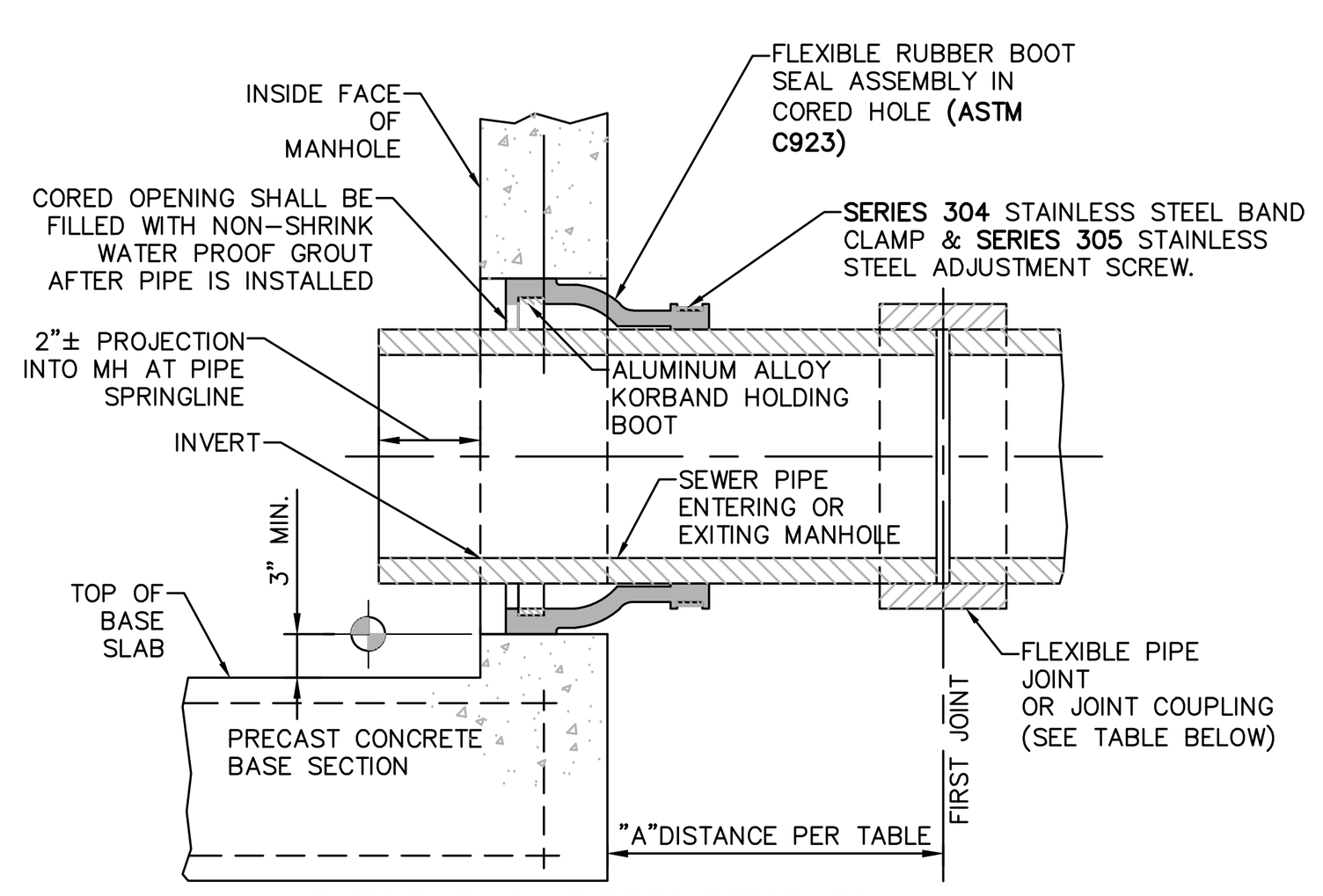

FLEXIBLE JOINT REQUIREMENTS

SEWER PIPE TYPE	FLEXIBLE JOINT TYPE IN & OUT	"A"DISTANCE (FEET)
DUCTILE IRON	STD RUBBER GASKET PIPE JOINT ONLY	10' MAX
PVC	STD RUBBER GASKET PIPE JOINT ONLY	3' MAX

NOTE:
REFERENCE MANHOLE DETAIL(S) FOR REQUIRED INVERT CHANNEL CONFIGURATION.

©
7 PIPE CONNECTION TO MANHOLE- PRECAST OR CORED HOLE W/ INSERTED FLEXIBLE BOOT
SCALE: NOT TO SCALE

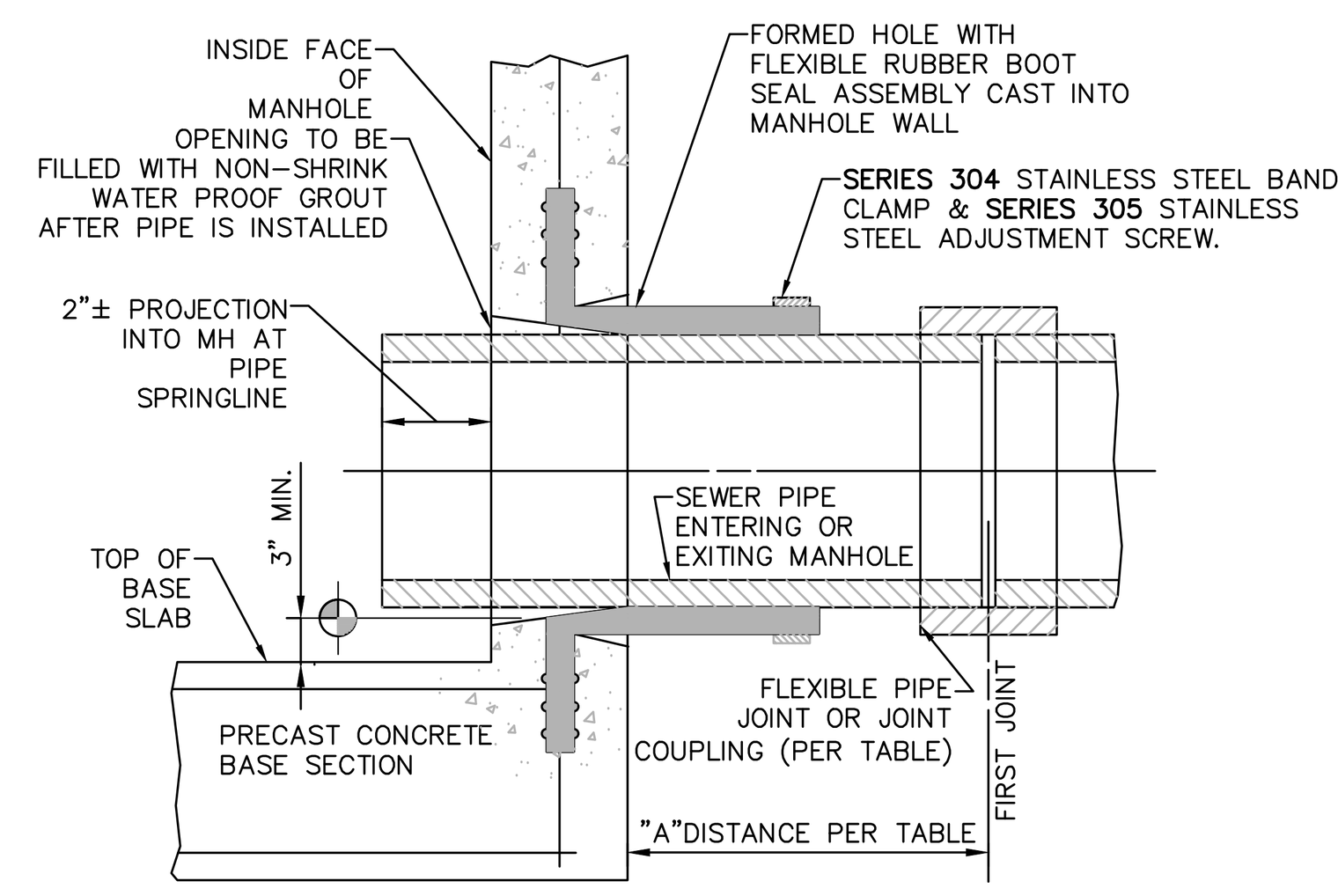

FLEXIBLE JOINT REQUIREMENTS

SEWER PIPE TYPE	FLEXIBLE JOINT TYPE IN & OUT	"A"DISTANCE (FEET)
DUCTILE IRON	STD RUBBER GASKET PIPE JOINT ONLY	10' MAX
PVC	STD RUBBER GASKET PIPE JOINT ONLY	3' MAX

NOTE:
REFERENCE MANHOLE DETAIL(S) FOR REQUIRED INVERT CHANNEL CONFIGURATION.

©
8 PIPE CONNECTION TO MANHOLE- FLEXIBLE RUBBER BOOT CAST INTO MANHOLE WALL
SCALE: NOT TO SCALE

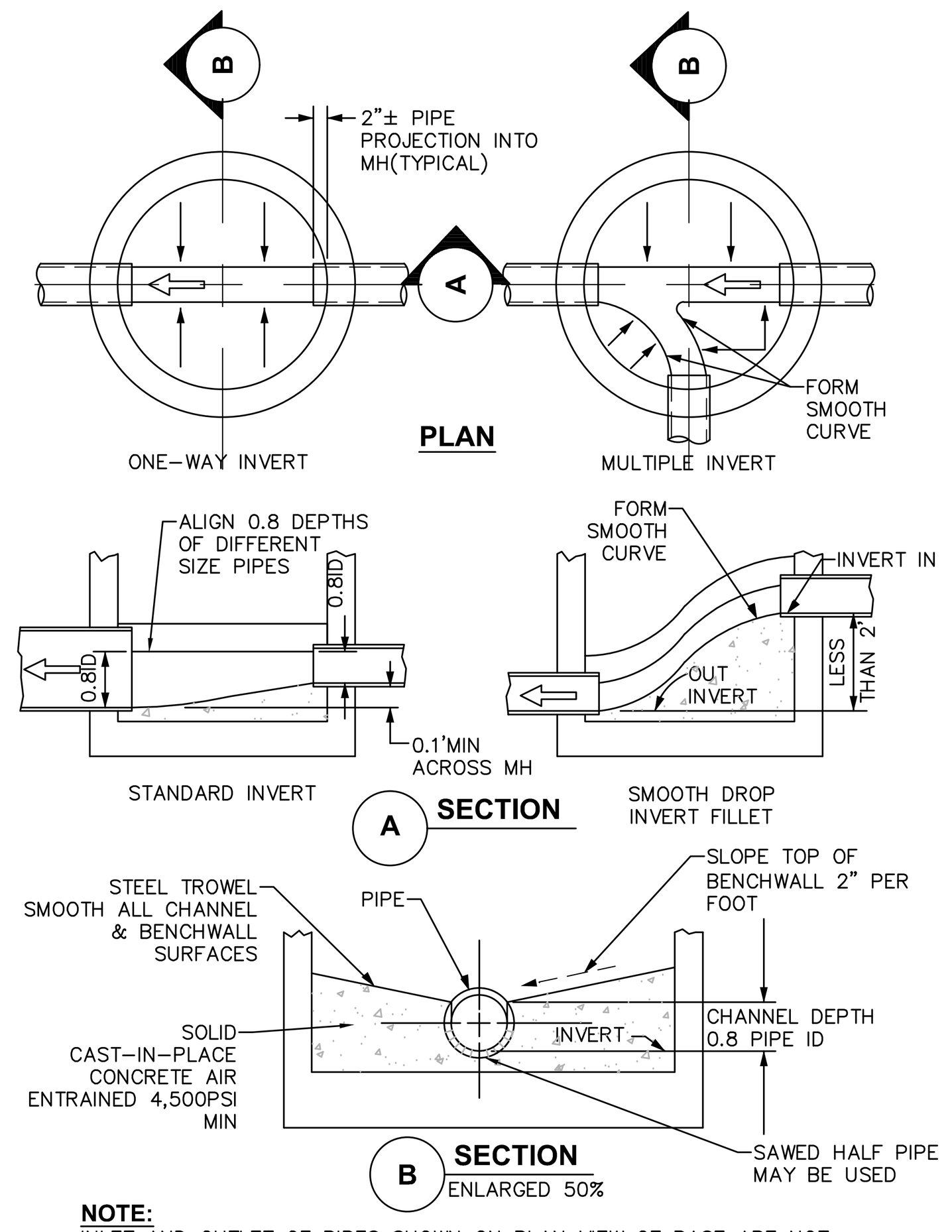

NOTE:
INLET AND OUTLET OF PIPES SHOWN ON PLAN VIEW OF BASE ARE NOT NECESSARILY TYPICAL OF ALL MANHOLES. REFER TO UTILITY PLAN FOR INLET AND OUTLET DIRECTIONS.

©
9 INVERT, CHANNEL AND BENCHWALLS
SCALE: NOT TO SCALE

ACCEPTABLE MANHOLE STEPS

MANUFACTURER	PATTERN NUMBER	"A" STEP WIDTH	"B" LEG LENGTH	"C" RUNG CLEAR	"D" EMBED–MENT	"E" RUNG CLEAR
M.A. INDUSTRIES INC*	PS2–PF	14 3/4	9 1/4	13 3/4	3 3/8	5 7/8
M.A. INDUSTRIES INC*	PS2–PFS	14 3/4	8 1/4	13 3/4	3 3/8	4 7/8

* OR EQUIVALENT

MH STEP DESIGN AND INSTALLATION SHALL COMPLY WITH ALL OSHA REGULATIONS

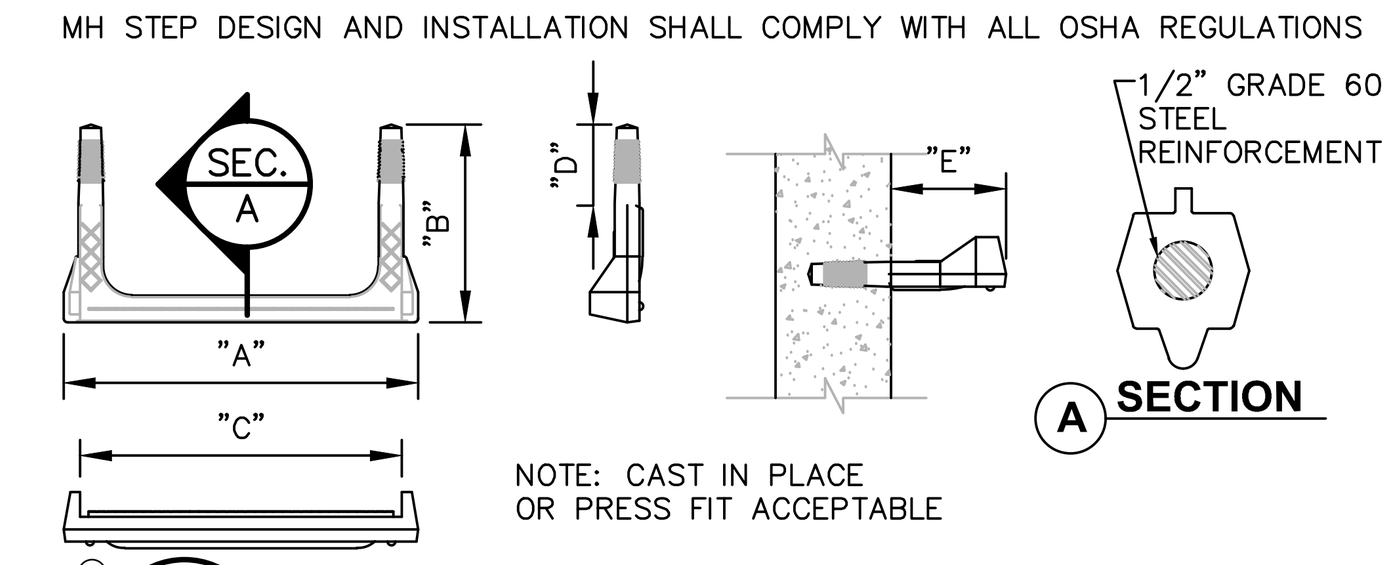

NOTE: CAST IN PLACE OR PRESS FIT ACCEPTABLE

©
10 COPOLYMER POLYPROPYLENE MH STEP
SCALE: NOT TO SCALE

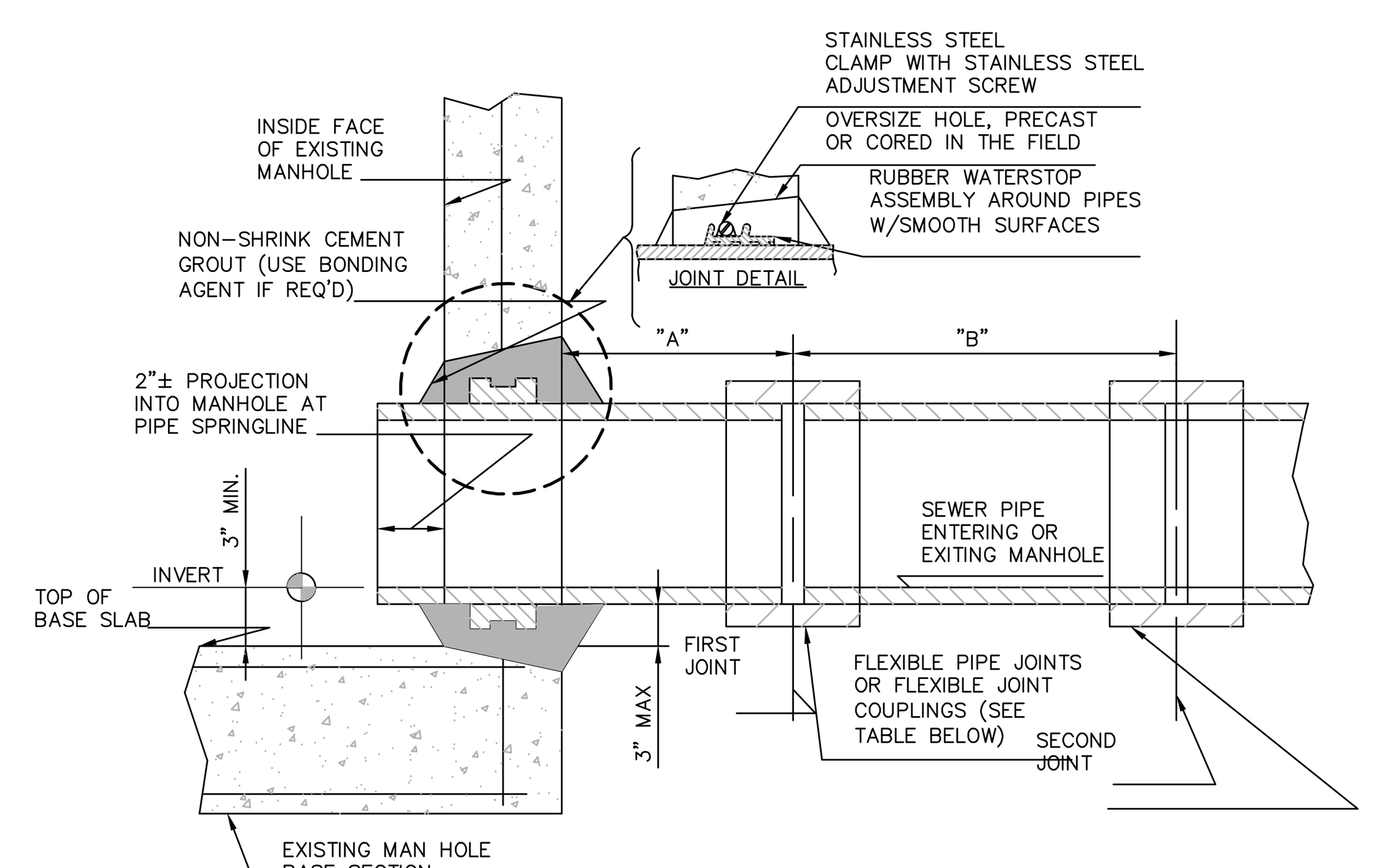

FLEXIBLE JOINT & WATERSTOP REQUIREMENTS

SEWER PIPE TYPE	FLEXIBLE JOINT TYPE IN & OUT	"A"DISTANCE (FEET)	"B"DISTANCE (FEET)	MH WATER STOP REQD
DUCTILE IRON	STD RUBBER GASKET PIPE JOINT ONLY	10'MAX	NO LIMIT	YES
PVC	SPECIAL FLEXIBLE JOINT COUPLING	1'MAX	3'MAX	YES

NOTES:
1. THIS DETAIL SHALL BE USED AT NO EXTRA COST IN PLACE OF EITHER OF THE PIPE–TO–MANHOLE CONNECTION DETAILS ONLY WHEN CONNECTING TO EXISTING MANHOLES THAT HAVE NO FLEXIBLE RUBBER BOOT PROVIDED.
2. REFERENCE MANHOLE DETAIL(S) FOR REQUIRED INVERT CHANNEL CONFIGURATION.

©
11 PIPE CONNECTION TO EXISTING MANHOLE- CEMENT GROUT SEAL WITH WATER STOP
SCALE: NOT TO SCALE

LaBella
Powered by partnership.
21 Fox Street
Poughkeepsie, NY 12601
845-454-3980
labellapc.com

NOT FOR CONSTRUCTION
EXP: ##/##/20## EXP: ##/##/20##

CERTIFICATE OF AUTHORIZATION NUMBER:
PROFESSIONAL ENGINEERING: 0021272
LAND SURVEYING: 0021271
GEOLOGICAL: 0021659

It is a violation of New York Education Law Art. 145 Sec. 7209 & Art. 147 Sec. 7307, for any person, unless acting under the direction of a licensed architect, professional engineer, or land surveyor, to alter an item in any way. If an item bearing the seal of an architect, engineer, or land surveyor is altered; the altering architect, engineer, or land surveyor shall affix to the item their seal and notation "altered by" followed by their signature and date of such alteration, and a specific description of the alteration.

© 2025 LaBella Associates

MASELO REALTY LLC
18 EASTVIEW ROAD
MONSEY, NY 10952

HIGHVIEW AT THE FALLKILL CREEK
CITY OF POUGHKEEPSIE
DUTCHESS COUNTY, NEW YORK

NO:	DATE:	DESCRIPTION:
Revisions		

PROJECT NUMBER: CZ81947.00
DRAWN BY: JRR
REVIEWED BY: KGA
ISSUED FOR: PLANNING BOARD REVIEW
DATE: 10/28/2025
DRAWING NAME:

SANITARY SEWER DETAILS

DRAWING NUMBER:

C570

Drawing Name: B:\GLOBAL\Legacy\Chazen\Projects\81900-81999\81947.00 - Highview II\DWG\01_C570_81747-00_SEWERD.DWG
Xref's Attached: X-BORDER_81947-00_30x42
Date Printed: Oct 27, 2025, 4:26pm

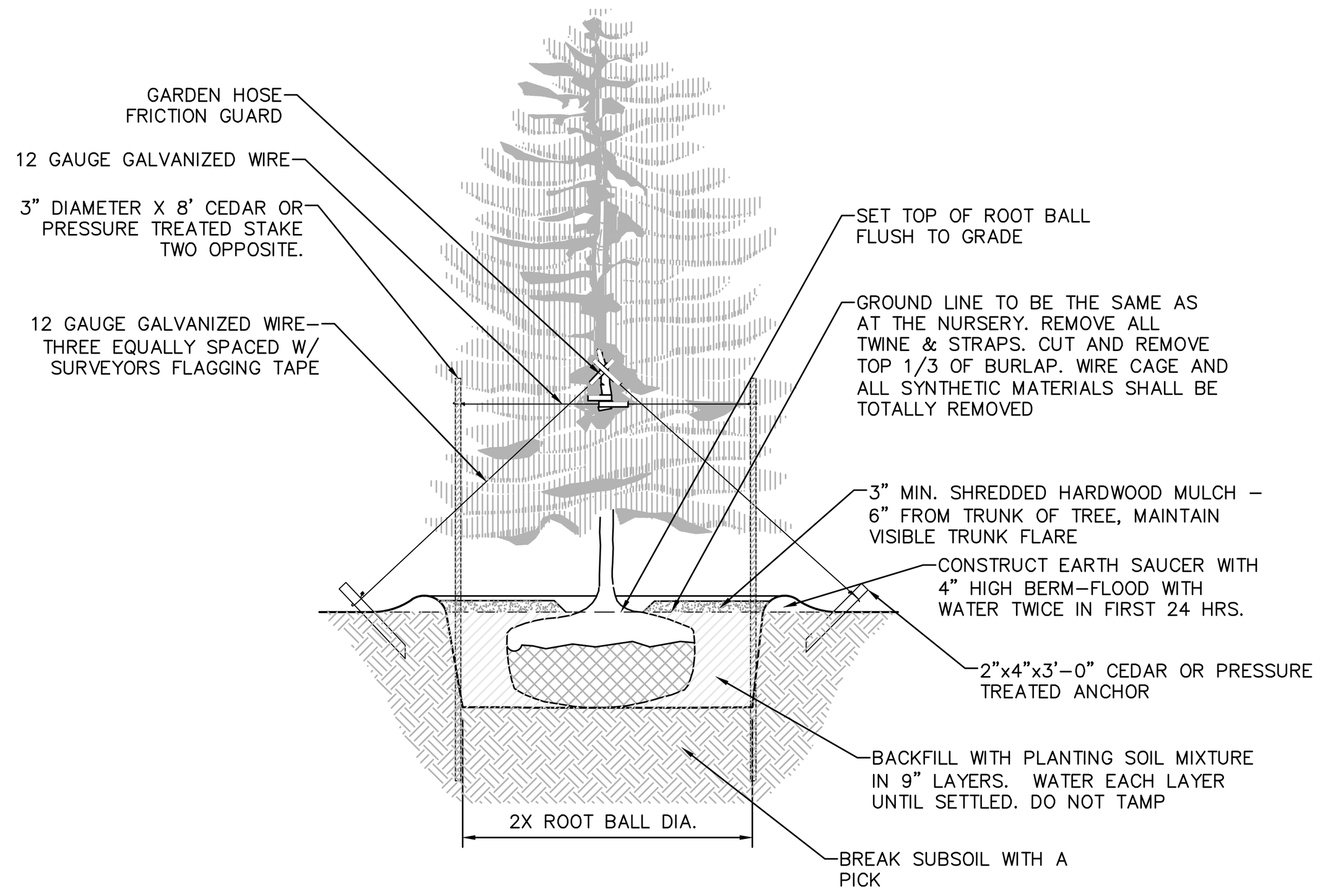

NOTES:
1. SPRAY WITH ANTIDESICCANT IN ACCORDANCE WITH MFG.'S RECOMMENDATIONS.
2. TREES LESS THAN 3" CALIPER SHALL BE STAKED.
3. TREES GREATER THAN 3" CALIPER AND UP SHALL BE GUYED AND ANCHORED.
4. STAKES SHALL BE REMOVED AT THE END OF THE FIRST GROWING SEASON AFTER PLANTING.

© 1 **EVERGREEN PLANTING DETAIL**
SCALE: NOT TO SCALE

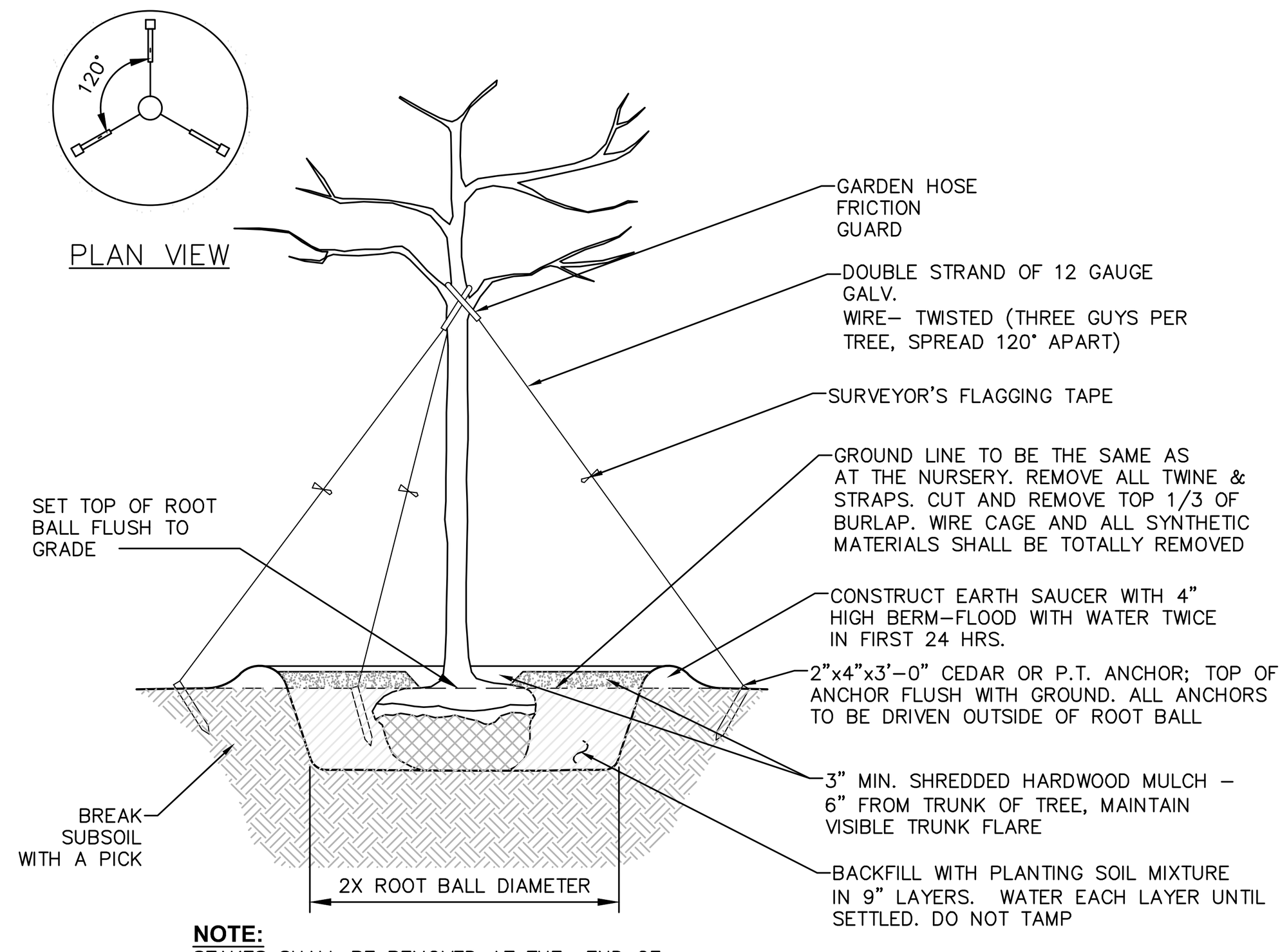

NOTE:
STAKES SHALL BE REMOVED AT THE END OF THE FIRST GROWING SEASON AFTER PLANTING

© 2 **PLANTING AND GUYING DETAIL BALLED AND BURLAPPED TREE**
SCALE: NOT TO SCALE

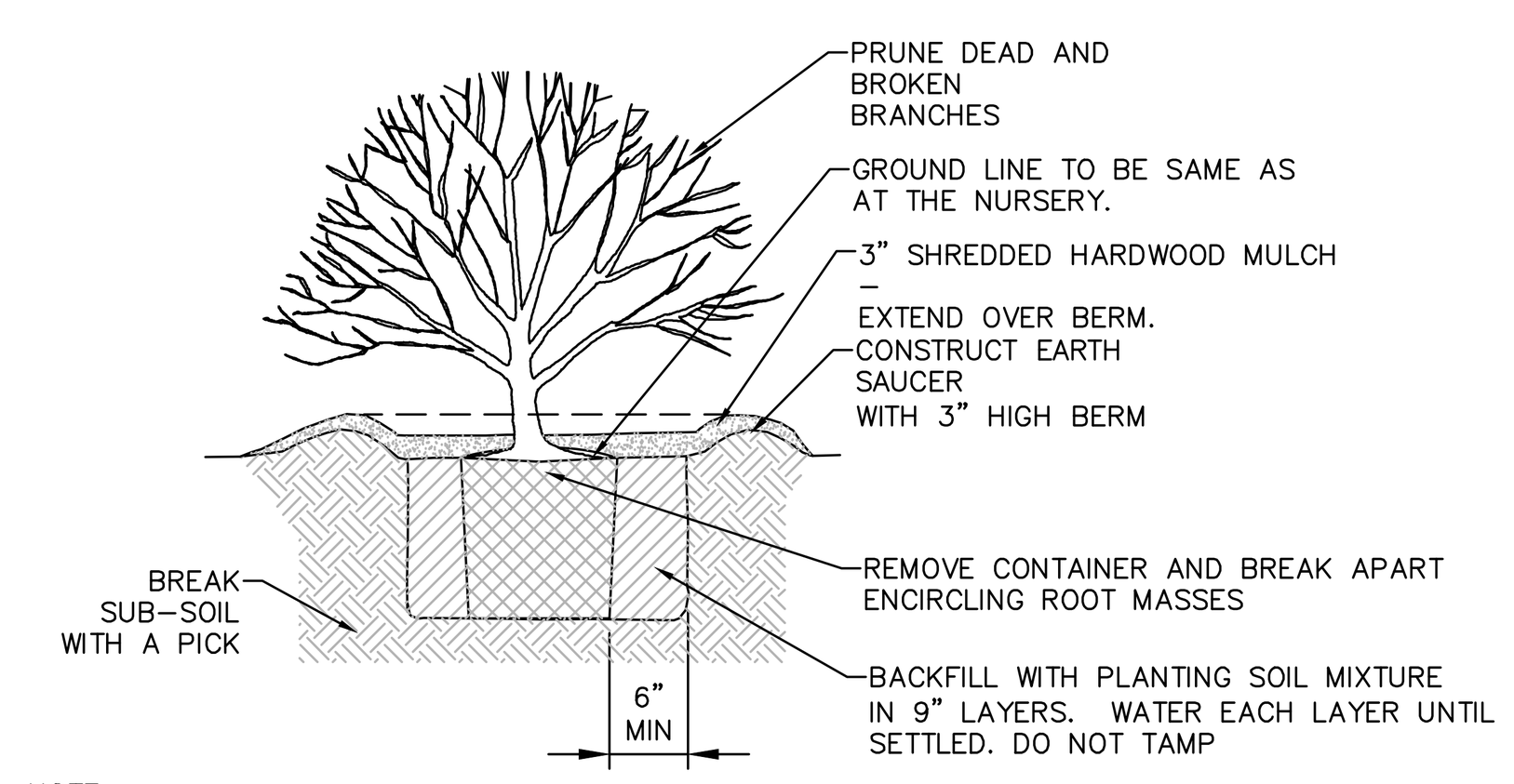

NOTE:
SPRAY WITH ANTI DESICCANT IN ACCORDANCE WITH MFG.'S RECOMMENDATIONS IF FOLIAGE IS PRESENT.

© 3 **SHRUB PLANTING DETAIL FOR CONTAINERIZED SHRUBS**
SCALE: NOT TO SCALE

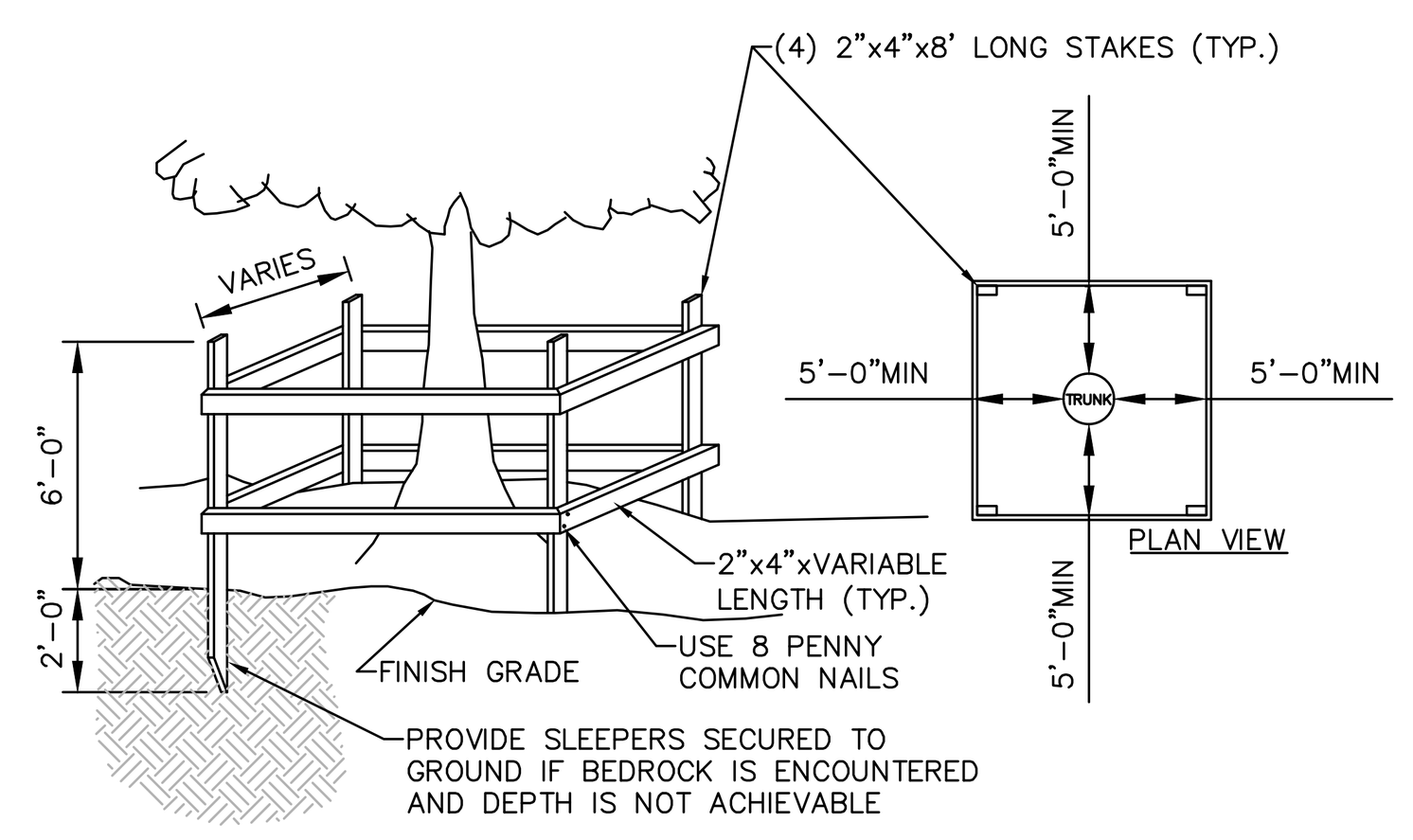

NOTE:
SEE LANDSCAPING PLAN FOR ADDITIONAL TREE PROTECTION NOTES.

© 4 **TEMPORARY TREE PROTECTION DETAIL**
SCALE: NOT TO SCALE

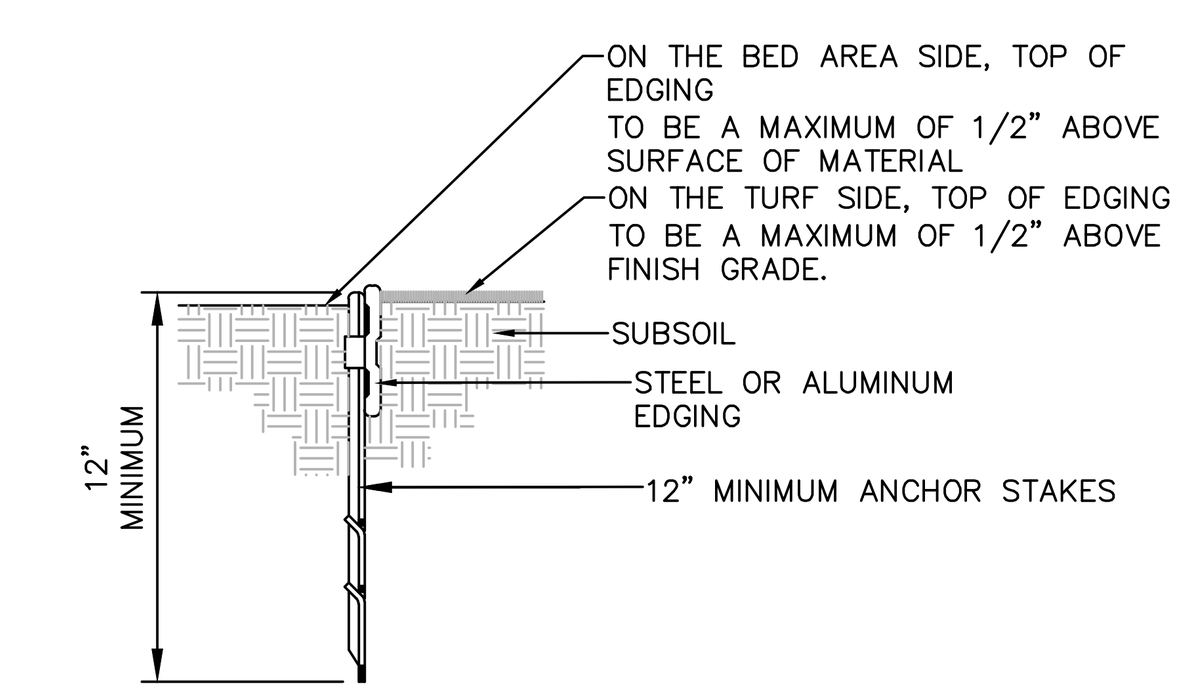

NOTES:
1. 16'–0" SECTIONS TO INCLUDE FIVE (5) 12" STAKES
2. 8'–0" SECTIONS TO INCLUDE THREE (3) 12" STAKES
3. COMPACT GRADES ADJACENT TO EDGING TO MINIMIZE SETTLING
4. CORNERS – CUT BASE OF EDGING HALF WAY AND FORM A CONTINUOUS CORNER.

© 5 **LANDSCAPE BED EDGING**
SCALE: NOT TO SCALE

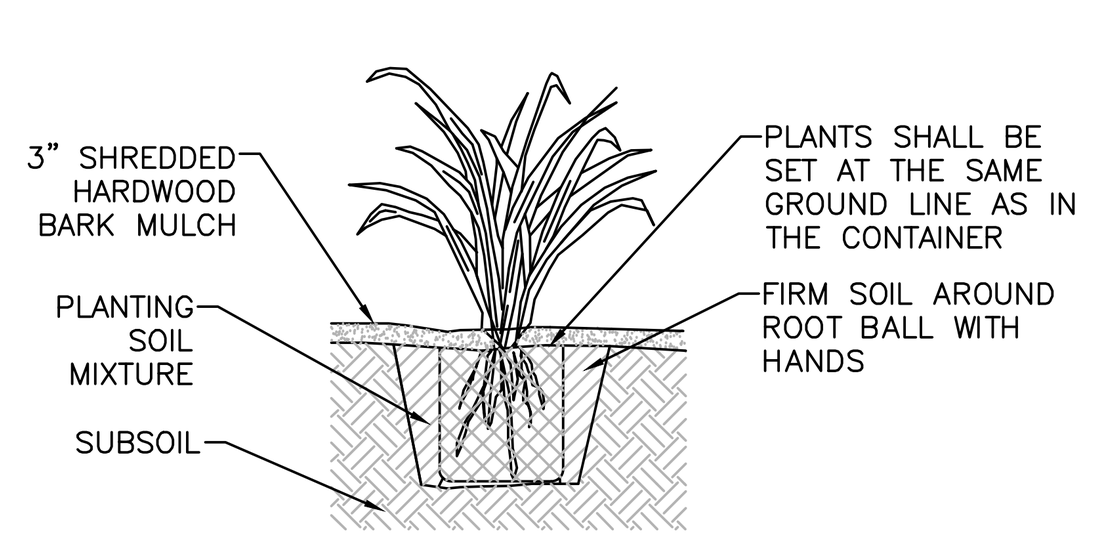

SECTIONAL ELEVATION

NOTES:
1. SPADED PLANTING SOIL MIX (4"–6" DEPTH), ADD FERTILIZER WHEN MIXING. DO NOT COMPACT AFTER PLANTING.
2. WATER THOROUGHLY AFTER PLANTING.
3. PROVIDE WELL DRAINING SUBSOIL WHEN SOIL IS HEAVY OR COMPACTED.
4. PLANTS SHALL BE REMOVED FROM ALL CONTAINERS WHEN PLANTED, UNLESS OTHERWISE STATED IN THE PLANT SCHEDULE.

© 6 **CONTAINERIZED PERENNIAL PLANTING**
SCALE: NOT TO SCALE

LANDSCAPING NOTES:

1. THE LANDSCAPE CONTRACTOR SHALL CAREFULLY COORDINATE CONSTRUCTION ACTIVITIES WITH THAT OF THE EARTHWORK CONTRACTOR AND OTHER SITE DEVELOPMENT.
2. THE CONTRACTOR SHALL VERIFY DRAWING DIMENSIONS WITH ACTUAL FIELD CONDITIONS AND INSPECT RELATED WORK AND ADJACENT SURFACES. THE CONTRACTOR SHALL VERIFY THE ACCURACY OF ALL FINISH GRADES WITHIN THE WORK AREA. THE CONTRACTOR SHALL REPORT TO THE LANDSCAPE ARCHITECT/ENGINEER AND OWNER ALL CONDITIONS WHICH PREVENT PROPER EXECUTION OF THIS WORK.
3. THE EXACT LOCATION OF ALL EXISTING UTILITIES, STRUCTURES AND UNDERGROUND UTILITIES, WHICH MAY NOT BE INDICATED ON THE DRAWINGS, SHALL BE DETERMINED BY THE CONTRACTOR. THE CONTRACTOR SHALL PROTECT EXISTING STRUCTURES AND UTILITY SERVICES AND IS RESPONSIBLE FOR THEIR REPLACEMENT IF DAMAGED.
4. THE CONTRACTOR SHALL KEEP THE PREMISES FREE FROM RUBBISH AND ALL DEBRIS AT ALL TIMES AND SHALL ARRANGE MATERIAL STORAGE SO AS NOT TO INTERFERE WITH THE OPERATION OF THE PROJECT. ALL UNUSED MATERIALS, RUBBISH AND DEBRIS SHALL BE REMOVED FROM THE SITE.
5. NO TREES OR SHRUBS SHALL BE PLANTED ON EXISTING OR PROPOSED UTILITY LINES.
6. QUALITY ASSURANCE:
   A. NOMENCLATURE: PLANT NAMES SHALL CONFORM TO THE LATEST EDITION OF "STANDARDIZED PLANT NAMES" AS ADOPTED BY THE AMERICAN JOINT COMMITTEE ON HORTICULTURAL NOMENCLATURE.

   B. SIZE AND GRADING: PLANT SIZES AND GRADING SHALL CONFORM TO THE LATEST EDITION OF "AMERICAN STANDARD FOR NURSERY STOCK" AS SPONSORED BY THE AMERICAN ASSOCIATION OF NURSERYMEN, INC (AAN), UNLESS OTHERWISE SPECIFIED.

   C. NURSERY SOURCE: OBTAIN FRESHLY DUG, HEALTHY, VIGOROUS PLANTS NURSERY GROWN UNDER CLIMACTIC CONDITIONS SIMILAR TO THOSE IN THE LOCALITY OF THE PROJECT FOR A MINIMUM OF 2 YEARS. PLANTS SHALL HAVE BEEN LINED OUT IN ROWS, ANNUALLY CULTIVATED, SPRAYED, PRUNED AND FERTILIZED IN ACCORDANCE WITH GOOD HORTICULTURAL PRACTICE. ALL PLANTS SHALL HAVE BEEN TRANSPLANTED OR ROOT PRUNED AT LEAST ONCE IN THE PAST 3 YEARS. BALLED AND BURLAPPED PLANTS MUST COME FROM SOIL WHICH WILL HOLD A FIRM ROOT BALL. HEELED IN PLANTS AND PLANTS FROM COLD STORAGE ARE NOT ACCEPTABLE.

   D. SUBSTITUTIONS: DO NOT MAKE SUBSTITUTIONS OF TREES AND/OR SHRUB MATERIALS. IF REQUIRED LANDSCAPE MATERIAL IS NOT OBTAINABLE, SUBMIT PROOF OF NON–AVAILABILITY AND PROPOSAL FOR USE OF EQUIVALENT MATERIAL. WHEN AUTHORIZED, ADJUSTMENTS OF CONTRACT AMOUNT (IF ANY) WILL BE MADE BY CHANGE ORDER.
7. SEEDING & PLANTING SEASONS AND TIMING CONDITIONS:
   A. UNLESS OTHERWISE DIRECTED IN WRITING, SEED LAWNS FROM MARCH 15 TO JUNE 15, AND FROM AUGUST 15 TO OCTOBER 15.

   B. UNLESS OTHERWISE DIRECTED IN WRITING PLANT TREES AND SHRUBS FROM MARCH 15 TO JUNE 1, AND FROM AUGUST 15 TO OCTOBER 30.

   C. AREAS UNDERGOING CLEARING OR GRADING AND ANY AREAS DISTURBED BY CONSTRUCTION ACTIVITIES WHERE LAWNS OR PLANTINGS ARE TO BE ESTABLISHED AND WORK IS COMPLETE, SHALL BE RESTORED WITH PERMANENT VEGETATIVE COVER AS SOON AS SITE AREAS ARE AVAILABLE AND WITHIN 14 DAYS AFTER WORK IS COMPLETE; WORK SHALL BE WITHIN THE SEASONAL LIMITATIONS FOR EACH KIND OF LANDSCAPE WORK REQUIRED. PROVIDE STABILIZATION WITH TEMPORARY VEGETATIVE COVER (TOPSOIL AND TEMPORARY COVER SEED MIX) WITHIN 14 DAYS AFTER WORK IS COMPLETE, FOR SEEDING OUTSIDE PERMITTED SEEDING PERIODS.
8. PRODUCTS:
   A. IMPORTED TOPSOIL: PROVIDE TOPSOIL CONFORMING TO THE FOLLOWING:

      i. LOAM TOPSOIL, WELL DRAINED HOMOGENEOUS TEXTURE AND OF UNIFORM GRADE, WITHOUT THE ADMIXTURE OF SUBSOIL MATERIAL AND FREE OF DENSE MATERIAL, HARDPAN, CLAY, STONES, SOD OR OTHER OBJECTIONABLE MATERIAL.

      ii. CONTAINING NOT LESS THAN 5% NOR MORE THAN 20% ORGANIC MATTER IN THAT PORTION OF A SAMPLING PASSING A 1/4" SIEVE WHEN DETERMINED BY THE WET COMBUSTION METHOD ON A SAMPLE DRIED AT 105°C.

      iii. CONTAINING A PH VALUE WITHIN THE RANGE OF 6.5 TO 7.5 ON THAT PORTION OF THE SAMPLE WHICH PASSES A 1/4" SIEVE.

      iv. CONTAINING THE FOLLOWING WASHED GRADATIONS:

SIEVE DESIGNATION	% PASSING
1"	100
1/4"	97–100
NO 200	20–60

   B. SEED MIXTURE:
   PROVIDE FRESH, CLEAN, NEW–CROP SEED MIXED IN THE PROPORTIONS SPECIFIED FOR SPECIES AND VARIETY, AND CONFORMING TO FEDERAL AND STATE STANDARDS. PROVIDE THE FOLLOWING MIXTURES:

      i. LAWN SEED MIX

SUN AND PARTIAL SHADE:

AMOUNT BY: WEIGHT	SPECIES OR VARIETY	MINIMUM % PURITY	GERMINATION
50%	KENTUCKY BLUE GRASS*	95%	80%
20%	PERENNIAL RYE	98%	90%
30%	CREEPING RED FESCUE	97%	85%
100%			

*MINIMUM 2 (EQUAL PROPORTIONS) VARIETIES AS LISTED IN CORNELL RECOMMENDATIONS FOR TURFGRASS.

SHADE:

AMOUNT BY: WEIGHT	SPECIES OR VARIETY	MINIMUM % PURITY	GERMINATION
25%	KENTUCKY BLUE GRASS**	95%	80%
20%	PERENNIAL RYE	98%	90%
35%	CREEPING RED FESCUE	97%	85%
20%	CHEWINGS RED FESCUE	97%	85%
100%			

**SHADE TOLERANT VARIETY

      ii TEMPORARY COVER SEED MIX

AMOUNT BY: WEIGHT	SPECIES OR VARIETY	MINIMUM % PURITY	GERMINATION
100%	ANNUAL RYEGRASS	98%	90%

   C. LIME: NATURAL LIMESTONE CONTAINING AT LEAST 85% OF TOTAL CARBONATES, GROUND TO SUCH FINENESS THAT AT LEAST 90% PASSES A 10–MESH SIEVE AND AT LEAST 50% PASSES A 100–MESH SIEVE.

   D. FERTILIZER:
      i. FOR STARTER FERTILIZING: COMMERCIAL STARTER FERTILIZER, GRANULAR, NONBURNING PRODUCT CONTAINING 5% NITROGEN, 10% AVAILABLE PHOSPHOROUS, AND 5% WATER SOLUABLE POTASH (5–10–5).

      ii. FOR FINAL FERTILIZING: IF APPLIED IN SPRING SEASON, SHALL BE A SLOW RELEASE COMMERCIAL FERTILIZER, GRANULAR, WITH 3–1–2 NPK. IF APPLIED IN FALL SEASON, SHALL BE AS SPECIFIED IN (8.D.i) ABOVE.

   E. TREES, SHRUBS, GROUND COVERS, PERENNIALS, ANNUALS:
      i. PLANTING SOIL MIXTURE: SHALL BE PREMIXED IN BULK, AND CONTAIN THE FOLLOWING BY VOLUME:
         30 PARTS TOPSOIL
         10 PARTS PEAT
         1 PART BONE MEAL

      ii. PEAT: BROWN TO BLACK IN COLOR, WEED AND SEED FREE. DRIED SPHAGNUM PEAT, CONTAINING NOT MORE THAN 9% MINERAL ON A DRY BASIS AND CONFORMING TO NYSDOT 713–15.

      iii. BONE MEAL: FINELY GROUND, RAW, MINIMUM 4% NITROGEN AND 20% PHOSPHORIC ACID. IT SHALL BE DELIVERED IN SEALED BAGS SHOWING THE MANUFACTURER'S GUARANTEED ANALYSIS.

   F. STAKES: 8 FEET LONG, 3 INCH DIA. CEDAR OR P.T. WOOD STAKES.

   G. HOSE: NEW, 2–PLY GARDEN HOSE NOT LESS THAN 1/2 INCH IN DIAMETER.

   H. WEED CONTROL FABRIC: SOIL CHECK AS MANUFACTURED BY BRIGHTON BYPRODUCTS CO. INC, NEW BRIGHTON, PA; MIRASCAPE OR MIRAFI GEOSYNTHETIC PRODUCTS, NORCROSS, PA, OR APPROVED EQUIVALENT.

   I. MULCH:
      i. LAWN AREAS
      OAT OR WHEAT STRAW, FREE OF WEEDS. AN ALTERNATIVE IS WOOD FIBER CELLULOSE IF HYDROSEEDING IS USED.

      ii. PLANT BED AREAS
      GROUND OR SHREDDED HARDWOOD BARK, UNCOLORED. NO PIECES OVER 2 INCHES GREATEST DIMENSION. FREE FROM SAWDUST.
9. EXECUTION:
   A. LANDSCAPE WORK SHALL BE UNDERTAKEN AS SOON AS SITE AREAS ARE AVAILABLE.

   B. TOPSOIL SHALL BE SPREAD NO LESS THAN 4" OVER SUB–GRADE MATERIAL. SOIL AMENDMENTS SHALL BE THOROUGHLY MIXED INTO THE TOP 4" OF TOPSOIL, FOLLOWING THE SPECIFICATIONS STATED BELOW.

   C. PERFORM FINE GRADING TO FINISHED ELEVATION ONLY IMMEDIATELY PRIOR TO PLANTING. PLANTING AREAS SHALL BE GRADED TO A SMOOTH, EVEN SURFACE, FREE OF DEPRESSIONS OR RIDGES WITH A UNIFORM LOOSE, FINE TEXTURE.

   D. FERTILIZING:
      i. THE SOIL SHALL BE TESTED FOR PH AND LIME ADDED AS NECESSARY. ALL AMENDMENTS SHALL BE CHECKED AND APPROVED BY LANDSCAPE ARCHITECT BEFORE AMENDMENTS ARE MADE.

      ii. APPLY FERTILIZER AT RATE OF 4 LBS/1000 SF FOR LAWN AREAS.

   E. LAWN:
      i. LAWN SEED MIX: SEED AT THE RATE OF 5 TO 6 LBS PER 1,000 SF.

      ii. TEMPORARY COVER SEED MIX: SEED AT THE RATE OF 3 TO 4 LBS PER 1,000 SF.

      iii. TEMPORARY COVER SEED MIX TO BE APPLIED ONLY FOR LATE FALL OR SUMMER SOIL STABILIZATION OUTSIDE ALLOWED SEEDING PERIODS.

   F. ALL SEEDED AREAS SHALL BE PROTECTED FROM EROSION BY ONE OF THE FOLLOWING METHODS:
      i. A UNIFORM BLANKET OF STRAW APPLIED AT A RATE OF 2 TONS/ACRE MIN, TO BE APPLIED ONCE SEEDING IS COMPLETE.

      ii. WOOD FIBER CELLULOSE APPLIED WITH SEED MIX BY A HYDROSEEDER AT A RATE OF 2,000 LBS/ACRE.

   G. ALL SEEDED SLOPES 3:1 OR GREATER SHALL BE PROTECTED FROM EROSION WITH JUTE MESH OR APPROVED EQUAL.

   H. ALL NEWLY PLANTED AREAS SHALL BE KEPT MOIST BY WATERING UNTIL GRASSES AND GROUND COVERS ARE WELL ESTABLISHED. THE LANDSCAPE CONTRACTOR MUST WATER PLANT MATERIAL WHEN NECESSARY FOR 60 DAYS AFTER INSTALLATION.

   I. LAWNS ARE TO BE WARRANTED UNTIL THEY BECOME ESTABLISHED, UNTIL FINAL ACCEPTANCE, AND NOT LESS THAN 60 DAYS AFTER COMPLETION OF ALL WORK. TREES, SHRUBS, GROUND COVERS, AND PERENNIALS SHALL BE WARRANTED AGAINST DEFECTS INCLUDING POOR GROWTH AND DEATH, EXCEPT WHEN RESULTING FROM OWNER NEGLECT, INCIDENTS THAT ARE BEYOND THE CONTROL OF THE LANDSCAPE INSTALLER AND DAMAGE OR ABUSE BY OTHERS, FOR AT LEAST ONE FULL YEAR AFTER PROJECT COMPLETION.

LaBella
Powered by partnership.
21 Fox Street
Poughkeepsie, NY 12601
845-454-3980
labellapc.com

NOT FOR CONSTRUCTION
EXP: ##/##/20## EXP: ##/##/20##

CERTIFICATE OF AUTHORIZATION NUMBER:
PROFESSIONAL ENGINEERING: 0021272
LAND SURVEYING: 0021271
GEOLOGICAL: 0021659

It is a violation of New York Education Law Art. 145 Sec. 7209 & Art. 147 Sec. 7307, for any person, unless acting under the direction of a licensed architect, professional engineer, or land surveyor, to alter an item in any way. If an item bearing the seal of an architect, engineer, or land surveyor is altered; the altering architect, engineer, or land surveyor shall affix to the item their seal and notation "altered by" followed by their signature and date of such alteration, and a specific description of the alteration.

© 2025 LaBella Associates

MASELO REALTY LLC
18 EASTVIEW ROAD
MONSEY, NY 10952

HIGHVIEW AT THE FALLKILL CREEK
CITY OF POUGHKEEPSIE
DUTCHESS COUNTY, NEW YORK

NO:	DATE:	DESCRIPTION:
Revisions		

PROJECT NUMBER: CZ81947.00
DRAWN BY: JRR
REVIEWED BY: KGA
ISSUED FOR: PLANNING BOARD REVIEW
DATE: 10/28/2025
DRAWING NAME: **LANDSCAPING DETAILS**
DRAWING NUMBER: **C580**

Drawing Name: B:\GLOBAL\Legacy\Chazen\Projects\81900-81999\81947.00 - Highview II\DWG\01_C580_81747-00_LANDSCD.DWG
Xref's Attached: X-BORDER_81947-00_30x42
Date Printed: Oct 27, 2025, 4:26pm

Full Environmental Assessment Form Part 1

Highview at the Fallkill Creek

Milton Street
City of Poughkeepsie
Dutchess County, New York



October 28, 2025

Prepared for:
Maselo Realty, LLC
18 Eastview Road
Monsey, NY, 10952

Prepared by:
LaBella Associates
21 Fox Street Suite 201
Poughkeepsie, NY 12601
845-454-3980

Project No. 81947.00

TABLE OF CONTENTS

PROJECT NARRATIVE

1.0 PROJECT DESCRIPTION 1
1.1 Introduction 1
1.2 Background 1
1.3 Site Description and Project Details 2
1.4 Anticipated List of Approvals 2
2.0 LAND USE, ZONING, AND PLANNING 3
2.1 Land Use and Zoning 3
2.2 Public Policy 4
3.0 COMMUNITY SERVICES 6
3.1 Emergency Services 6
4.0 SOILS AND WATER RESOURCES 6
4.1 Soils 6
4.2 Water Resources 8
4.3 Floodplain 9
5.0 UTILITIES 10
5.1 Water and Wastewater 10
5.2 Stormwater 10
6.0 TRAFFIC AND PARKING 11
6.1 Traffic 11
6.2 Parking 12
7.0 VEGETATION AND WILDLIFE 12
7.1 Endangered, Threatened, and Rare Species and Significant Habitat 12
8.0 HISTORIC AND ARCHEOLOGICAL RESOURCES 15

LIST OF TABLES

Table 1: Anticipated Approvals/Permits 2
Table 2: Residential Neighborhood A (RNA) - Permitted Uses 3
Table 3: Characteristics of Soil Types within Project Area 7
Table 4: Anticipated Water Usage/Wastewater Generation 10
Table 5: Estimated Traffic Generation 11
Table 7: Habitat Types on the Project Site 12
Table 8: Habitat Cover Types Identified on the Site 13

FULL ENVIRONMENTAL ASSESSMENT FORM PART 1 FORM

LIST OF FIGURES

Figure 1: USGS Location Map
Figure 2: Orthophoto Tax Map
Figure 3: Land Use Map
Figure 4: Zoning Map, Existing and Proposed
Figure 5: Soil Map
Figure 6: Wetland, Stream, and Floodplain Map
Figure 7: NYSDEC Environmental Resource Map
Figure 8: NYSOPRHP Cultural Resource Information System (CRIS) Map
Figure 9: Map of Publicly Accessible Federal, State, or Local Scenic of Aesthetic Resources

ATTACHMENTS

Attachment A: Councilwoman Flowers Letter of Support
Attachment B: Natural Resource Information

Note: Site Plan submitted separately.

PROJECT NARRATIVE

1.0 PROJECT DESCRIPTION

1.1 Introduction

The Applicant and Owner, Maselo Realty, LLC, is proposing the rezoning of an 8.713-acre tax parcel on Milton Street in the City of Poughkeepsie from Residential Neighborhood A (RNA) to Residential Neighborhood D (RND) for the construction of a 63-apartment unit clustered multifamily development within two buildings with one access off Milton Street. The parcel is identified as parcel number 131300-6162-73-623227 on the City of Poughkeepsie Tax Map. The Town of Poughkeepsie abuts the eastern edge of the property (see Figures 1 and 2).

The parcel is currently undeveloped and zoned for Residential Neighborhood A (RNA) within which multifamily (i.e. 5+ unit) residential development is not permitted. Therefore, to facilitate the proposed project, the Applicant is petitioning the City for a rezoning of the property from RNA to RND by the Common Council. Upon completion of the rezoning, the Applicant will seek site plan approval from the Planning Board.

1.2 Background

On April 25, 2006, the City of Poughkeepsie Planning Board granted site plan approval for the construction of a 120-unit condominium complex to be known as Highview at the Fallkill Creek, located on the north side of Milton Street. The Applicant was Phoenix Capital Partners, LLC. The parcel was zoned as Medium High-Density Residential (R-4) at that time, which would have permitted a maximum of 140 dwelling units based on the R-4 requirements and lot size. The original project was never undertaken, and site plan approvals lapsed. The site was subsequently rezoned to Medium Low-Density Residence District (R-2) in October 2010.

When the Applicant decided to pursue the project again in 2019, the parcel was zoned for Medium Low-Density Residential (R-2) within which multifamily development was not permitted. Therefore, to facilitate the proposed project, the Applicant petitioned the City for a rezoning of the property from R-2 to PRD by the Common Council. The Planning Board as lead agency determined that the action was an unlisted action and upon examination of the Full Environmental Assessment Form (FEAF) and 6 N.Y.C.R.R Section 617.7 of the State Environmental Quality Review Act (SEQRA), adopted a negative declaration on January 20, 2021. The rezoning approval was granted by the Common Council on February 16, 2021 (Common Council Ordinance 0-21-01).

The Common Council and City's Mayor approved the amendment to the Zoning Map on February 18, 2021. On May 25, 2021, the owner filed an application for site plan approval from the Planning Board for the project under the PRD regulations. After filing an area variance application to the Zoning Board of Appeals on June 6, 2021, the Applicant received approval for three area variances on September 14, 2021 to enable the proposed development.

Since then, the application has been on numerous agendas of the Planning Board and multiple extensions have been granted for the rezoning petitions. In addition to Planning Board meetings, the project underwent two community meetings in 2019 and has received support from Councilwoman Flowers, see Attachment A for a letter of support.

On September 6, 2024, a Municipal Consent to Form a Sewage-Works Corporation was approved by the Common Council and the Mayor. On November 4, 2024 the property was rezoned to RNA as part of the Common Council's adoption of the City of Poughkeepsie Zoning Ordinance, along with entire neighborhood of primarily single-family dwellings to the north (which provides the only access to the property).

Accordingly, the Applicant seeks a rezoning to the RND Zoning District to permit the proposed the 63-unit development. The project remains as proposed previously, with no changes to unit count or access.

1.3 Site Description and Project Details

The project parcel is located in the northeast quadrant of the city, along the city/town border, with access to the site on Milton Street by way of Fitchett Street and West Arnold Road. The project site consists of vacant wooded land. Fallkill Creek runs along the western property line and within the property for approximately 200 linear feet. The development proposal, referenced as Highview at the Fallkill Creek – Milton Street, includes 63 multifamily dwelling units clustered within two buildings in the southeast portion of the project parcel. The unit breakdown is anticipated to include approximately 31 one-bedroom and 32 two-bedroom units.

The development will be located away from Milton Street (approximately 209 feet) with a substantial natural buffer. The finished floor of the southern building's (Building 100 on Sheet C130) ground floor will be approximately 18 ft lower than Milton Street. The development will not directly impact wetlands or the Fallkill Creek and is approximately 128.5 – 145.7 feet away from the Creek. The development will occupy approximately 60% of the 8.713-acre property allowing for approximately 40% of the site to remain undisturbed including 373 trees or approximately 67.5% of trees currently found on the site.

1.4 Anticipated List of Approvals

Table 1 provides a list of the approvals/permits that are anticipated for the project.

Table 1: Anticipated Approvals/Permits

AGENCY	APPROVAL/PERMIT
City of Poughkeepsie Common Council	Rezoning from RNA to RND
City of Poughkeepsie Planning Board	Site plan approval
City of Poughkeepsie – Engineering Department	Curb cut approval
City of Poughkeepsie – Zoning Administrator	Floodplain development permit
Dutchess County Department of Planning and Development	GML 239m referral
Dutchess County Department of Health	Water and Sewer Connections

AGENCY	APPROVAL/PERMIT
New York State Department of Environmental Conservation (NYSDEC)	GP-0-25-001 SPDES General Permit for Discharges during Construction Activities; Article 24 Adjacent Area for grading (pending)

2.0 LAND USE, ZONING, AND PLANNING

2.1 Land Use and Zoning

The parcel is currently undeveloped and zoned for Residential Neighborhood A (RNA). To the north and west, the property is abutted by Residential Neighborhood C (RNC) and Industrial Mixed (IM) zoning districts, which house a range of uses including multi-family housing (Highridge Garden Apartments), a junkyard, the City's Department of Public Works complex, and manufacturing uses. The southern portion of the lot abuts more RNA district properties, comprised primarily of single-family residences (Figures 3 and 4). To the east, in the Town of Poughkeepsie, the property is abutted by a parcel zoned for Multifamily Residence (Town of Poughkeepsie) which contains a large apartment complex, Mountain Brook Apartments.

The purpose of the RNA District is to support the development of neighborhoods with single family dwellings on individual lots, as well as to provide for low-impact facilities and uses that benefit from a low-density residential environment, which is similar to that of the previous zoning on this lot (R-2). Table 2 shows the uses that are permitted in this district. multifamily dwellings are not permitted in RNA Districts. Therefore, the Applicant is petitioning the City for a rezoning of the property from RNA to Residential Neighborhood D (RND) by the Common Council to facilitate the development of a 63-unit multifamily residential development.

The rezoning of the property to the RND district, which will permit multifamily residential development and the proposed site design is anticipated to result in a more environmentally sensitive development of the property than that of a traditional single-family home development. Just as was the requirement for the R-2 District, the minimum lot area requirement in the RNA District is 6,000 SF for each single family home; therefore, a maximum of 63 dwellings could theoretically be developed on the site according to the RNA zoning requirements. Under the existing RNA zoning, a cluster development allows for flexibility with site design, but the residential uses permitted in a cluster development are limited to the residential uses permitted in the underlying zoning district. In the RNA District, the residential use is single family detached dwellings, which would preclude apartment development.

Table 2: Residential Neighborhood A (RNA) - Permitted Uses

	Permitted as-of-right
RNA Zoning District	Single-family detached dwellings
	Professional office in a residence
	Short-term rental (§19-5.47)
	Park or recreation facility

	Places of worship (§19-5.40)
	Public or quasi-public community facility
	Community Garden (§19-5.12)
	Day-care center / home
	Membership Club (§19-5.30)
	Permitted by Planning Board Special Permit
	Cluster development (§19-5.10)
	Professional office in a residence
	Golf, tennis, or swimming club (§19-5.20)
	Public, private schools, parochial schools and preschools (§19-5.43)

The Applicant proposes to rezone the property to RND to allow multifamily development within a development that conforms to the parcel's unique environmental character. The property is identified in the 2018 City of Poughkeepsie Natural Resource Inventory by Hudsonia Ltd. as one of the last remaining areas within the City of Poughkeepsie where the Fallkill is not channeled and is permitted to flood naturally. Approximately one-third of the property falls within the City's flood area boundary and contains both upland hardwood forest and upland shrubland habitat. These characteristics make the site ideally suited to the clustering of development away from the creek, which will retain existing habitat. Therefore, rezoning the property to RND is an appropriate alternative given the RND's stated purpose and its innate flexibility that is intended to encourage context-specific housing that responds to the characteristics of a site and the character of the surrounding neighborhood.

The purpose of the RND district zoning is "to provide areas for a broad range of housing types with the opportunity for appropriate nonresidential uses at a fairly high density commensurate with the scale and characteristics of the city's older neighborhoods. These are areas with access to major transportation arteries and a range of community services."[1] The proposed site development meets this purpose as it would provide rental property options in the City.

2.2 Public Policy

City of Poughkeepsie Comprehensive Plan, 2022

The City updated its Comprehensive Plan in 2022 with a focus on three areas: Main Street, the Cottage Street Business District, and the Waterfront. These areas were identified as being critically important to the City's future growth. Other areas of interest updated in the Plan included neighborhood planning issues, the City's Zoning Code, and recreational resources. The Plan outlines the following priorities:

- Improve residential quality of life
- Expand access to good and affordable housing opportunities

[1] City of Poughkeepsie Zoning Code, pg. 26.
https://cityofpoughkeepsie.com/DocumentCenter/View/3627/Zoning-Code

- Strengthen civic life and commercial vitality

According to Part 4 Step 2 of the Plan, "Guidance for Block Selection and Strategy Development," the project parcel is a Type 2 residential block within District B, which calls for "the rehab or inclusive redevelopment of blighted properties … to both preserve city assets while improving access to good housing. At the same time, lower land prices in this part of the city present opportunities for homeownership expansion through rehab of smaller existing properties or sensitive infill."[2]

The proposed rezoning would allow multifamily development within a development that conforms to the parcel's unique environmental character and one that fits with the community's character. Pending the rezoning, the proposed project would bring infill development to a developed part of the City that is comprised of a diverse mix of land uses. The rezoning is anticipated to be consistent with the City's Comprehensive Plan as it would utilize existing zoning regulations to develop a unique site with a development that is consistent with local land uses and zoning.

Dutchess County Hudson River Valley Greenway Compact Plan, 2000

Dutchess County is one of 13 counties that make up the Hudson River Valley Greenway, which was established by the State by the Hudson River Valley Greenway Act of 1991. In March 2000, the Hudson River Valley Greenway Council approved the Dutchess County Greenway Compact Plan, "Greenway Connections: Greenway Compact Program and Guides for Dutchess County Communities." The Greenway was created to facilitate the development of a voluntary regional strategy for preserving scenic, natural, historic, cultural and recreational resources while encouraging compatible economic development and maintaining the tradition of home rule for land use decision-making. By Local Law Number 1 of 2002, the City became a participating community in the Greenway Compact, and adopted a statement of land use policies, principles and guides entitled, "Greenway Connections: Greenway Compact Program and Guides for Dutchess County Communities." The City requires that consideration of the Greenway Compact Plan policies, principles and guides be used to supplement other established land use policies in the City where discretionary decisions are made.

The proposed action to rezone the property from RNA to RND to facilitate the construction of a 63-apartment unit clustered multifamily development will bring infill development to an irregularly shaped parcel that is bound by a mix of land uses, including the Fallkill Creek. The proposed development is anticipated to adhere to the purpose of the RND District as it will provide multifamily housing within a site design that encourages conservation of natural resources. Therefore, the proposed action is consistent with the Greenway Compact Plan as it is anticipated to comply with zoning and is consistent with the Greenway Guide and Comprehensive Plan.

Fallkill Watershed Management Plan, October 2006

The Fallkill Watershed covers 19.5 square miles, including portions of the City of Poughkeepsie. The Fallkill is approximately 38 miles long, and where it travels through the City it has been channelized and is contained by stone walls before it charges into the Hudson

[2] Pk4Keeps Comprehensive Plan, August 2022, pg. 79, https://app.box.com/s/c08qe8jxalq2pvtb1542gb8kz0hd16o7

River. The Fallkill has been evaluated and has been found to contain various chemicals and bacteria, with deterioration being most prevalent within the City. The Plan makes several recommendations to improve the Fallkill, including removal of stone walls channelizing the creek and greater oversight on trash dumping. The vision for this section of the creek is articulated as, "The creek and its immediate environs should be transformed into an attractive community resource that is valued for its aesthetic, recreational, and biological attributes as well as its cultural role in the development and history of the City of Poughkeepsie."[3]

The project site abuts and includes some portions of the Fallkill Creek. No impacts to the Creek, associated wetlands are proposed to occur as part of the proposed project. Pending the approval of the rezoning, a floodplain development permit would be sought for work within the floodplain area, if applicable. The project would be constructed according to a Stormwater Pollution Prevention Plan and proposes connection to the City's storm sewer and sewer systems; therefore, the proposed action will not negatively impact the objectives of the Management Plan.

3.0 COMMUNITY SERVICES

3.1 Emergency Services

Fire emergency/ambulance service is provided by the City of Poughkeepsie. According to the City website, the Fire Department is a 66-man career-staffed department that protects 32,000 people living in an area of 5.72 square miles. It operates three fire stations that respond to over 5,000 calls per year. The City's apparatus includes three engines, two ladder trucks, and a shift commander's vehicle 24/7. The city also has two reserve engines, one ladder truck, one rescue truck, one utility truck, and two river marine units that can be put in service as needed. Water for fire protection is obtained from the City of Poughkeepsie water supply. A truck turning radius plan will be submitted during the site plan review. It is anticipated that there is sufficient firefighting capability to meet the minimal increase in demand related to the proposed 63 new residential units.

Police protection is provided by the City of Poughkeepsie Police Department, with support from Dutchess County Sheriff's Department and NYS Police.

4.0 SOILS AND WATER RESOURCES

4.1 Soils

Figure 5 shows the soil types that are expected to be present on the project site, and Table 3 provides characteristics of these soil types, according to the Dutchess County Soil Survey information available in GIS and the Natural Resource Conservation Service website.

[3] Fall Kill Watershed Management Plan, October 2006, Page 5.

Table 3: Characteristics of Soil Types within Project Area

% of SITE	SOIL SYMBOL	SOIL TYPE	SLOPES	DRAINAGE	DEPTH TO WATER TABLE (FEET)	DEPTH TO BEDROCK (INCHES)
87.4	DwC	Dutchess-Cardigan complex, rolling, rocky	5 to 16%	well	>6	
		Dutchess (40%)		well	>6	>60
		Cardigan (30%)		well	>6	20 to 40
8.3	DxC	Dutchess-Cardigan-Urban Land complex, rolling, rocky	5 to 16%			
		Dutchess (25%)		well	>6	>60
		Cardigan (25%)		well	>6	20 to 40
		Urban Land (25%)		well	>2	>10
4.3	Ud	Udorthents, smoothed	mostly 0 to 8% but 8 to 25% on sides of excavations & along highways	somewhat excessively to moderately well	>3.0 Nov-Jun	>60

Most of the site contains the Dutchess-Cardigan complex, rolling, rocky soil series (DwC). An area of the Dutchess-Cardigan-Urban Land complex soil series (DxC) exists along Milton Street, and an area of Udorthents soil series (Ud) exists in the southwest corner of the project parcel. The Dutchess soils and the Cardigan soils are well drained soils. The Udorthents soil series is a somewhat excessively to moderately well drained soil. Urban Land is described as areas covered by buildings, streets, parking lots and other impervious surfaces, which obscure soil identification, so that the actual identification of the soil is not determined for some portions of the site. The Dutchess soil series, the Cardigan soil series, and the Udorthents soil series all have a depth to water table of greater than 6 feet. Urban Land is described as areas covered by buildings, streets, parking lots and other impervious surfaces which obscure soil identification, so that the actual identification of the soil is not determined for some portions of the site. Therefore, the depth to water table for these areas is unknown and is assumed to be greater than 2 feet according to the Soil Survey.

According to the City of Poughkeepsie's Natural Resources Inventory (NRI) Report, the project site's bedrock geology is Graywacke and shale, which is considered less permeable than other types of bedrock found in the City of Poughkeepsie. The surficial geology of the site features bedrock outcrops. These rock outcrop areas are shown on the concept plan.

According to a geotechnical engineering report by Chazen for the previously approved site plan, groundwater was encountered in only one of eight borings.[4] These borings ranged in depth from 5.5 feet to 15.8 feet due to refusal at bedrock, with the exception of the northernmost boring in which refusal occurred at 2.5 feet. Thus, groundwater was generally deeper than 5.5 feet throughout most of the site. The report states that, "groundwater seepage into open excavations is not anticipated at this time, but that the contractor should be prepared to lower the groundwater table two feet below the base of excavations to provide a stable subgrade for construction activities and to maintain the integrity of the natural bearing soils."

If water is encountered above three feet below the surface, footings and footing drains will be designed in accordance with accepted construction practices to alleviate any problems associated with a high water table. With this practice, no significant impacts due to the presence of water above three feet below the surface are anticipated.

Rock encountered during the construction of the proposed residential development will be removed by mechanical methods (ripping), when possible. If blasting is determined to be necessary, all blasting operations will adhere to New York State and local ordinances governing the use of explosives. Proper program guidelines will be established between New York State, the City of Poughkeepsie and the blasting contractor prior to undertaking this activity. If blasting is required, it will be performed in accordance with New York State Department of Transportation (NYSDOT) Geotechnical Engineering Manual #22 "Procedures for Blasting" latest edition.

Based on this information, the proposed project will not result in any significant adverse impacts related to soils.

4.2 Water Resources

According to NYSDEC wetland and stream information available through GIS (Figure 6), the EAF Mapper, and Environmental Resource Map (Figure 7), there is a NYSDEC Class C stream, Fallkill Creek (Regulation 862-393) that travels along the western edge of the property, with approximately 200 linear feet located within the property boundary. Class C streams are not regulated by the NYSDEC. There is a National Wetland Inventory (NWI) freshwater forested/shrub wetland (PFO1E) located on the western part of the site adjoining the area where the Fallkill Creek flows. The NWI identifies the Fallkill Creek as riverine (R3UBH). NYSDEC Environmental Resource Mapper indicates that there is a DEC informational wetland within this NWI wetland area as well.

Ecological Solutions conducted a site visit on October 15, 2020 to conduct a wetland delineation and habitat assessment. There are 0.788 acres of wetland (associated with the Fallkill Creek) located along the western site boundary. These wetlands are characterized as forested floodplain. Previously, these wetlands were identified as federally regulated. Pending confirmation from the NYSDEC, an Article 24 permit for disturbance in the regulated buffer may be required to allow grading, stormwater, and connection to the existing sewer main. Given that the proposed stormwater will provide water quality treatment and that the

[4] Geotechnical Engineering Report, The Chazen Companies, September 14, 2005.

sewer infrastructure is existing, there are no anticipated significant adverse impacts related to disturbance within the regulated buffer.

The Fall Kill is identified in the Natural Resources Inventory for the City of Poughkeepsie (referred to herein as the NRI Report) as a natural resource that supports or contributes to beautification, habitat, flood control, history, recreation and climate resilience. The project site is discussed throughout the document as a parcel, "that is undeveloped and contains streamside forests and wetlands within the floodplain. Due to the lack of channelization, this area floods readily without harming buildings or roads. It is an important flood mitigation area as it is the only segment of the creek in the City of Poughkeepsie where flooding can naturally occur."[5] The Fall Kill is identified as a conservation priority in the NRI Report because it, "provides streamside habitats, helps to reduce and filter surface runoff, provides shading vegetation, and provides organic material that supports the food web and habitat structure of the stream."[6] Based on this rationale a priority conservation zone of 160 feet from the stream edge is recommended to increase habitat area and improve in-stream conditions.

Per Zoning Section 19-5.17, any structure or use of land for other than parking, recreation or open space shall be located not nearer than 30 feet to the top of the banks of the Fall Kill Creek. The project complies with this requirement as an approximately 128.5 FT buffer is provided from the stream edge, which preserves the existing habitat without fragmentation. The proposed project will not directly impact wetlands and the development area is located approximately 128.5 – 145.7 feet away from the Creek. Furthermore, with the implementation of the Stormwater Pollution Prevention Plan (SWPPP) no significant adverse impacts to wetlands or to the NYSDEC Fallkill Creek will occur as part of the proposed action.

4.3 Floodplain

The property is identified in the NRI Report as one of the last remaining areas within the City of Poughkeepsie where the Fall Kill is not channelized and is permitted to flood naturally. This section of the Fall Kill is identified as a significant habitat area that provides important flood retention due to the undeveloped forested riparian buffer. The NRI Report explains that during flood events the Fall Kill may overflow into these wetlands, which are located within the flood hazard area or 100-year floodplain. According to the NRI Report, "flooding helps to slow down water, recharge groundwater and increase water quality by letting particulates settle out instead of being carried downstream."[7] According to FEMA Community Panel Number 36027C0358E information (effective 5/12/2012) available through GIS (Figure 6), an area abutting the Fallkill Creek is located within Zone AE (100-year floodplain) or special flood hazard area. The floodplain area is identified on the site plan. Some grading (no construction) may occur within the 100-year floodplain; therefore, a floodplain development permit will be sought. There will be a substantial buffer and distance between the proposed development and the Fall Kill and the implementation of the SWPPP will ensure that no significant adverse impacts to the floodplain will occur.

[5] The Environmental Cooperative at Vassar Barns. Natural Resources Inventory for the City of Poughkeepsie. 2019. Page 10.
[6] The Environmental Cooperative at Vassar Barns. Natural Resources Inventory for the City of Poughkeepsie. 2019. Page 73.
[7] The Environmental Cooperative at Vassar Barns. *Natural Resources Inventory for the City of Poughkeepsie*. 2019. Page 46.

5.0 UTILITIES

5.1 Water and Wastewater

Municipal water and sewer service currently serve the project site. According to the New York State Department of Environmental Conservation (NYSDEC) Design Standards for Intermediate Sized Wastewater Treatment Systems, March 2014, the proposed project is expected to require water usage of 11,410± gallons per day. It is anticipated that the City's municipal water system has capacity to serve the proposed use. The Grading and Utility plan (C140) shows a proposed water tap at the 8" water main available at Milton Street. The previous analysis, submitted for the previously proposed 120-unit project approved in 2006, indicated that sufficient pressure and capacity exists to serve the proposed 63-unit project. The Engineer's Report for the water system will be updated to identify current system conditions with regards to static and residual pressure. Sprinkler pressures and flow rates will be identified to assess flow capabilities at the proposed hydrants. Consultation with the Fire Chief will be undertaken at that time as well.

The Grading and Utility plan (C140) shows a sanitary sewer connection to the existing sanitary sewer main that passes through the site. The previous analysis, submitted for the previously proposed 120-unit project approved in 2006, indicated that sufficient capacity exists to serve the proposed 63-unit project. The Engineer's Report for the sanitary sewer will be updated to identify the conditions of the existing sewer main and its capacity during peak flow from the proposed connection point downstream along the Fallkill Creek through to Mansion Street.

Table 4: Anticipated Water Usage/Wastewater Generation

Type of Use	Units	Gallons per Day	Anticipated Use/Generation
Apartment	Per bedroom	110	31 one-bedroom = 3,410 gpd 32 two-bedroom units = 7,040 gpd
Pool	Per swimmer[1]	10	Approximately 720 SF pool = 48 swimmers 48 swimmers x 10 = 480 gpd
Pool House	Per swimmer	10	48 swimmers x 10 = 480 gpd
Total = 11,410 gpd			

[1] Based on NYS Sanitary Code Subpart 6-1, which requires a minimum of 15 SF of pool surface area per swimmer for a shallow pool.

5.2 Stormwater

The proposed project will require greater than one acre of disturbance and will require coverage under the State Pollutant Discharge Elimination System (SPDES) General Permit for Stormwater Discharges from Construction Activity. A SWPPP will be prepared in conformance with the most current New York State Stormwater Management Design Manual and New York State Standards and Specifications for Erosion and Sediment Control. The Grading and Utility Plan (C140) shows the stormwater being conveyed via swales and

subsurface piping to an on-site stormwater bioretention basin. The treated water will outflow to the Fallkill Creek. Therefore, the proposed project is not expected to result in any adverse impacts in regard to stormwater.

6.0 TRAFFIC AND PARKING

6.1 Traffic

The project would feature one, two-way access drive across along Milton Street, between Fitchett Street and West Arnold Road. Site traffic will then use Mansion Street to disperse travel to the north, south, east, and west. Other local roads likely to be used by site traffic include Corlies Avenue, Pershing Avenue, Innis Avenue, and Smith Street.

Dutchess County's PRL Bus Line is conveniently routed through the neighboring Mountain Brook Apartments. Several routes including the B, E and F travel along the East West Arterial, approximately ½ mile south of the site.

The Trip Generation Manual, 11th Edition published by the Institute of Transportation Engineers (ITE) is the industry-standard resource for estimating the traffic generated by various types of land uses and it was used to estimate the site generated trips for this project. Based on data for Multifamily Housing-Mid Rise (Land Use Code 221), the proposed project will generate approximately 26 total trips in the weekday morning and 36 total trips in the evening peak periods, See Table 5. This is a minimum amount of traffic that will be added to the surrounding roadway network, representing about 1 trip every 2 to 3 minutes for the entering and exiting movements.

Table 5: Estimated Traffic Generation

Land Use	**AM Peak Hour Trips Entering the Site**	**AM Peak Hour Trips Exiting the Site**	**Total AM Peak Trips added to Adjacent Street Traffic**	**PM Peak Hour Trips Entering the Site**	**PM Peak Hour Trips Exiting the Site**	**Total PM Peak Trips added to Adjacent Street Traffic**
Multifamily Housing (Mid-Rise) Land Use Code 221	7	19	26	22	14	36

Note: Analysis uses 63 dwelling units and the fitted curve equation in the ITE Manual to determine the AM and PM peak hour trip generation.

A traffic impact study was completed in 2005 for this project. At that time, the project consisted of 163 units and was estimated to generate 76 and 90 total trips for the weekday morning and afternoon peak periods. The traffic study concluded that the project at 163 units would have minimal impact as the studied intersections would continue to operate at acceptable levels of service. Therefore, at the currently proposed 63-units with reduced volumes this project will also have minimal traffic impacts. No improvements are needed.

Additionally, historic traffic volumes collected on roadways in the vicinity of the site were reviewed using NYSDOT's Traffic Data Viewer. The data shows that volumes for Mansion Street, Corlies Avenue, Innis Avenue, and Smith Street have decreased between 2012 and 2019 on the order of 1% to 15%. This is further indication that the surrounding roadways expected to serve the proposed project have the capacity available to accommodate the site traffic.

6.2 Parking

The proposed project is required to provide 79 parking spaces (i.e. 1.25 parking spaces per dwelling unit, 63 units) per Section 19 Article 6 of the City's 2024 Zoning and Land Use Regulations. The proposed project will provide 124 parking spaces; therefore, this requirement will be met.

7.0 VEGETATION AND WILDLIFE

7.1 Endangered, Threatened, and Rare Species and Significant Habitat

According to the NRI Report, the project site is home to several habitats, including upland shrubland, upland hardwood forest, upland mixed forest and hardwood swamp in addition to wetland and stream areas. Table 7 presents a brief description of these habitats based on information found in the report.

Table 6: Habitat Types on the Project Site

Specific Habitat Type	Brief Description
Upland Shrubland	Open (nonforested) area with shrubs making up >20% of ground cover
Upland Hardwood Forest	Non-wetland forest dominated by hardwood trees (conifers make up 25% of canopy)
Upland Mixed Forest	Non-wetland forest with a mix of hardwoods and conifers (conifers make up 25-75% of canopy)
Hardwood Swamp	Wetland (identified by predominance of hydrophytic vegetation) dominated by trees and/or shrubs

According to the NRI Report, "the Fall Kill is highly impacted by channelization and pollution, nonetheless it continues to serve as an important habitat for migratory fish species such as the American eel and river herring." The Upland Hardwood Forest, which currently dominates the site, is described as a habitat that is also important for cooling derived from shade, carbon sequestration, reducing stormwater runoff, and improvement of air quality. According to the NYSDEC Environmental Resource Map (Figure 7), there are known occurrences of the Blanding's Turtle (State listed threatened species) on or in the vicinity of the project site. In a January 21, 2020 letter the NYSDEC stated that they have no records of rare or state-listed

animals or plants, or significant natural communities at the project site. The letter also explained that within 0.8 mile of the project site is a documented location of Blanding's Turtle (Emydoidea blandingii, state listed as Threatened). The turtles may travel 0.8 mile or more from documented locations. An analysis to assess potential adverse impacts to Blandings Turtle was completed and received sign off from the NYSDEC. This information has been submitted separately. There is no NYSDEC Significant Natural Community identified on the project site.

According to the US Fish & Wildlife Service (USFWS) Information for Planning and Consultation[8] (Attachment B), there is potential for the Indiana Bat (endangered), Northern Long-eared Bat (endangered), and Tricolored Bat (proposed endangered) on or in the vicinity of the project site.

The project site is identified in Map 4.4, "Habitat Envelopes and Potential Corridors" within the NRI Report as a Significant Habitat Area. The Report states that, "if new development in these areas cannot be avoided, it should be concentrated near the edges and near existing roads and other development so that as much habitat area as possible is preserved without fragmentation."[9]

Ecological Solutions, LLC completed a threatened and endangered species habitat suitability assessment on October 15, 2020 to assess the existing habitat on site, potential impacts, and possible mitigation for impacts and conservation of the listed species (see Attachment B). Table 8 identifies the habitat that was observed on the site:

Table 7: Habitat Cover Types Identified on the Site

Description	Coverage (acres)	Disturbance (acres)
Fall Kill Creek	1.0	0
Rich Mesophytic Forest	4.7	2.5
Upland Meadow	2.8	0

Rich Mesophytic Forest: The site slopes generally contain rich mesophytic forest upslope of the Fallkill Creek. The dominant trees include a mixture of the following: red maple (Acer rubrum), white ash Fraxinus americana), red oak (Quercus rubra), and black oak (Q. velutina). There is a subcanopy stratum of small trees and tall shrubs dominated by flowering dogwood (Cornus florida), red maple, and black cherry (Prunus serotina). The overstory trees are generally large in the 12 to 24+ inch range with several larger oaks and other tree species on the site. Debris/trash is located in areas throughout the forest.

Fallkill Creek: The Fallkill Creek and associated wetland fringe is located along and is part of the western site boundary. The wetland fringe associated with the Creek is forested floodplain.

Upland Meadow: Within the forested area are openings or pockets upland meadow.

[8] Note there is no federal action involved so a formal consultation under Section 7 is not required.
[9] The Environmental Cooperative at Vassar Barns. Natural Resources Inventory for the City of Poughkeepsie. 2019. Page 221 or page 85 of Appendix A.

Blanding's Turtle

Blanding's turtles are a mobile species that utilize a variety of wetland and upland habitats for nesting, foraging, overwintering, and drought refuges. Characteristics that indicate core habitat are: shrubby pools/ponds with permanent or intermittent hydroperiod with little flow through; high water depths of 0.5–4.0 feet; tree canopy open or absent; tree fringe present; and a dense cover of shrubs, forbs, lemnids or nymphaeids, with coarse and fine organic debris. In addition to core wetlands it is known that Blanding's turtles use a complex of habitat types during different periods in their life cycle. According to the NYSDEC it is a semi-aquatic species that uses a variety of wetland and upland habitats. Wetland habitat usage by Blanding's turtles includes different types of freshwater systems such as emergent marshes, woodland pools, red maple swamps, buttonbush kettle-holes, ponds including excavated ponds, lakes, rivers, and streams. Juvenile Blanding's are normally associated with shallower water and more densely vegetated habitats as compared to that of adults. Open meadows especially with Hoosic gravelly soils are preferred nesting habitats. Upland forest area provides shade during turtle travel and migration.

Based on information gathered during the Habitat Assessment, there is no core habitat on/or immediately adjacent to the site. There are no mapped Hoosic soils on the site. Hoosic soils are associated with turtle nesting when covered by low growing sparsely vegetated upland meadow/agriculture area. The Fallkill Creek may have been utilized in the distant past by this species in some capacity for travel and dispersal but today is unlikely due to the extensive development in this area of the City of Poughkeepsie and lack of potential habitat as a destination. There are no impacts to this species since there is no potential habitat on the site or in the vicinity of the site. As stated above, an analysis to assess potential adverse impacts to Blandings Turtle was completed and received sign off from the NYSDEC. This information has been submitted separately.

Indiana Bat, Northern Long-eared Bat, Tricolored Bat

The bats typically hibernate in caves/mines in the winter and roosts under bark or in tree crevices in the spring, summer, and fall. The hibernacula - Williams Lake Complex is about 10 miles from the site. Suitable potential summer roosting habitat is characterized by trees (dead, dying, or alive) or snags with exfoliating or defoliating bark, or containing cracks or crevices that could potentially be used by Indiana bats as a roost. The minimum diameter of roost trees observed to date is 2.5 inches for males and 4.3 inches for females. However, maternity colonies generally use trees greater than or equal to 9 inches dbh. Overall, roost tree structure appears to be more important to Indiana bats than a particular tree species or habitat type. Females appear to be more habitat specific than males presumably because of the warmer temperature requirements associated with gestation and rearing of young. As a result, they are generally found at lower elevations than males may be found. Roosts are warmed by direct exposure to solar radiation, thus trees exposed to extended periods of direct sunlight are preferred over those in shaded areas. However, shaded roosts may be preferred in very hot conditions. As larger trees afford a greater thermal mass for heat retention, they appear to be preferred over smaller trees. Streams associated with floodplain forests, and impounded water bodies (ponds, wetlands, reservoirs, etc.) where abundant supplies of flying insects are likely found provide preferred foraging habitat for Indiana bats, some of which may fly up to 2-5 miles from upland roosts on a regular basis. Indiana bats also forage within the canopy of upland forests, over clearings with early successional vegetation

(e.g., old fields), along the borders of croplands, along wooded fencerows, and over farm ponds in pastures. While Indiana Bats appear to forage in a wide variety of habitats, they seem to tend to stay fairly close to tree cover. The rich mesophytic forest described in Table 8 occupies about 4.7 acres of the 8.7 acres site. This forested area contains many large trees in the 24+ inch dbh range with some containing holes and crevices that could provide foraging habitat for this species.

Construction of the project will occur over a 6-month – 1-year period. Activities during construction will include grading and earth-moving, building construction, addition of electric lights, increasing impervious surface area and altering site drainage will occur. The project may result in direct and indirect effects on Indiana bats by altering the quality and quantity of their summer habitat including removing trees, generating noise during construction, and creating visual disturbances. There will be an increase in vehicular traffic, parking, and maintenance activities which are anticipated effects from construction and operation of the project to bats.

Since the USFWS list of species for the site indicated that the site is within the range of the threatened/endangered bat, the Applicant will incorporate the following conservation measures to ensure no impact occurs to this species.

Effects from Tree Clearing: Clearing activities could have an adverse impact on foraging and roosting activities. Such impacts will be avoided by conducting all clearing during winter months when bats will be in hibernation off site. Proposed clearing for the project will remove ±2.5 acres of forested habitat. The project will avoid impacts by:

- Implementing tree clearing for site activities during timeframes when bats are not resident on the site October 1 – to March 31 or unless approved by the NYSDEC outside this timeframe, and

- Prior to clearing, the limits of proposed clearing will be clearly demarcated on the site with orange construction fencing (or similar) to prevent inadvertent overclearing of the site since about 2.3 acres of forested habitat will remain.

Effects from Lighting: Site lighting is anticipated after development of the site. To avoid impacts to foraging or roosting bats street lighting on the site will use City of Poughkeepsie Planning Board approved light fixtures that have tops that direct light down to minimize light pollution and not interfere with potential bat foraging activities. These measures will result in minimizing potential adverse effects to Indiana bats so that adverse effects to this species are deemed unlikely.

As explained in earlier sections, a large buffer (131 feet) and distance (146 – 160 feet away) will separate the Fall Kill Creek from the proposed development. Based on the information provided above, no significant adverse impacts will occur to vegetation and wildlife. This information will be provided to NYSDEC.

8.0 HISTORIC AND ARCHEOLOGICAL RESOURCES

According to the NYS Office of Parks, Recreation, and Historic Preservation (NYSOPRHP) Cultural Resource Information System (CRIS) mapping (Figure 8), the project site does not

contain and is not adjacent to any National or State Historic Register sites or any sites that were determined to be eligible for listing on the National or State Historic Register. The Applicant received a Letter of No Effect from the NYSOPRHP State Historic Preservation Office on December 17, 2020.

FULL ENVIRONMENTAL ASSESSMENT FORM (FEAF) PART 1 FORM

Instructions for Completing Part 1

Part 1 is to be completed by the applicant or project sponsor. Responses become part of the application for approval or funding, are subject to public review, and may be subject to further verification.

Complete Part 1 based on information currently available. If additional research or investigation would be needed to fully respond to any item, please answer as thoroughly as possible based on current information; indicate whether missing information does not exist, or is not reasonably available to the sponsor; and, when possible, generally describe work or studies which would be necessary to update or fully develop that information.

Applicants/sponsors must complete all items in Sections A & B. In Sections C, D & E, most items contain an initial question that must be answered either "Yes" or "No". If the answer to the initial question is "Yes", complete the sub-questions that follow. If the answer to the initial question is "No", proceed to the next question. Section F allows the project sponsor to identify and attach any additional information. Section G requires the name and signature of the applicant or project sponsor to verify that the information contained in Part 1is accurate and complete.

A. Project and Applicant/Sponsor Information.

Name of Action or Project: Highview at the Fallkill Creek		
Project Location (describe, and attach a general location map): Milton Street, City of Poughkeepsie, Dutchess County, New York		
Brief Description of Proposed Action (include purpose or need): The Applicant and Owner, Maselo Realty, LLC, is proposing the rezoning of an 8.713-acre tax parcel on Milton Street in the City of Poughkeepsie from Residential Neighborhood A (RNA) to Residential Neighborhood D (RND) for the construction of a 63-apartment unit clustered multifamily development within two buildings with access off Milton Street. The parcel is identified as parcel number 131300-6162-73-623227 on the City of Poughkeepsie Tax Map. The Town of Poughkeepsie abuts the eastern edge of the property (see Figures 1 and 2). The parcel is currently undeveloped and zoned for Residential Neighborhood A (RNA) within which multifamily (i.e. 5+ unit) residential development is not permitted. Therefore, to facilitate the proposed project, the Applicant is petitioning the City for a rezoning of the property from RNA to RND by the Common Council. Upon completion of the rezoning, the Applicant will seek site plan approval from the Planning Board.		
Name of Applicant/Sponsor: Maselo Realty, LLC (Simon Abikhzer)	Telephone: 845-341-7395 E-Mail: simonabikzer@gmail.com	
Address: 18 Eastview Road		
City/PO: Monsey	State: NY	Zip Code: 10952
Project Contact (if not same as sponsor; give name and title/role):	Telephone: E-Mail:	
Address:		
City/PO:	State:	Zip Code:
Property Owner (if not same as sponsor):	Telephone: E-Mail:	
Address:		
City/PO:	State:	Zip Code:

B. Government Approvals

B. Government Approvals, Funding, or Sponsorship. ("Funding" includes grants, loans, tax relief, and any other forms of financial assistance.)		
Government Entity	**If Yes: Identify Agency and Approval(s) Required**	**Application Date (Actual or projected)**
a. City Counsel, Town Board, or Village Board of Trustees ☑Yes ☐No	City of Poughkeepsie Common Council - Rezoning to RND	Fall/Winter 2025
b. City, Town or Village Planning Board or Commission ☑Yes ☐No	City of Poughkeepsie Planning Board - Site Plan Approval	Fall/Winter 2025
c. City, Town or Village Zoning Board of Appeals ☐Yes ☑No		
d. Other local agencies ☑Yes ☐No	City Engineering Dept. - Curb Cut approval; City Zoning Administrator - Floodplain development	Winter/Spring 2026
e. County agencies ☑Yes ☐No	Dutchess County Planning Department - GML 239m Referral; Health Department - Utility Conn.	Fall/Winter 2025
f. Regional agencies ☐Yes ☑No		
g. State agencies ☑Yes ☐No	NYS Department of Environmental Conservation: GP-0-25-001, Article 24 Adjacent Area for grading	Summer/Fall 2026
h. Federal agencies ☐Yes ☑No		

i. Coastal Resources.
i. Is the project site within a Coastal Area, or the waterfront area of a Designated Inland Waterway? ☐Yes ☑No

ii. Is the project site located in a community with an approved Local Waterfront Revitalization Program? ☐Yes ☑No

iii. Is the project site within a Coastal Erosion Hazard Area? ☐Yes ☑No

C. Planning and Zoning

C.1. Planning and zoning actions.

Will administrative or legislative adoption, or amendment of a plan, local law, ordinance, rule or regulation be the only approval(s) which must be granted to enable the proposed action to proceed? ☐Yes ☑No

- **If Yes,** complete sections C, F and G.
- **If No,** proceed to question C.2 and complete all remaining sections and questions in Part 1

C.2. Adopted land use plans.

a. Do any municipally- adopted (city, town, village or county) comprehensive land use plan(s) include the site where the proposed action would be located? ☑Yes ☐No

If Yes, does the comprehensive plan include specific recommendations for the site where the proposed action would be located? ☐Yes ☑No

b. Is the site of the proposed action within any local or regional special planning district (for example: Greenway; Brownfield Opportunity Area (BOA); designated State or Federal heritage area; watershed management plan; or other?) ☑Yes ☐No

If Yes, identify the plan(s):

Hudson River National Heritage Area; Fall Kill Watershed Management Plan, October 2006; Dutchess County Hudson River Valley Greenway Compact Plan, 2000

c. Is the proposed action located wholly or partially within an area listed in an adopted municipal open space plan, or an adopted municipal farmland protection plan? ☐Yes ☑No

If Yes, identify the plan(s):

C.3. Zoning

a. Is the site of the proposed action located in a municipality with an adopted zoning law or ordinance. ☑ Yes ☐ No
If Yes, what is the zoning classification(s) including any applicable overlay district?
Residential Neighborhood A (RNA). See Sections 1.2 and 2.1 for more details.

b. Is the use permitted or allowed by a special or conditional use permit? ☑ Yes ☐ No

c. Is a zoning change requested as part of the proposed action? ☑ Yes ☐ No
If Yes,
i. What is the proposed new zoning for the site? Residential Neighborhood D (RND).

C.4. Existing community services.

a. In what school district is the project site located? Poughkeepsie City School District

b. What police or other public protection forces serve the project site?
City of Poughkeepsie Police Department with support from Dutchess County Sheriff's Department and NYS Police

c. Which fire protection and emergency medical services serve the project site?
City of Poughkeepsie Fire Department

d. What parks serve the project site?
Mansion Square Park

D. Project Details

D.1. Proposed and Potential Development

a. What is the general nature of the proposed action (e.g., residential, industrial, commercial, recreational; if mixed, include all components)? Residential apartments

b. a. Total acreage of the site of the proposed action? 8.713 acres
b. Total acreage to be physically disturbed? 5.26 acres
c. Total acreage (project site and any contiguous properties) owned or controlled by the applicant or project sponsor? 8.713 acres

c. Is the proposed action an expansion of an existing project or use? ☐ Yes ☑ No
i. If Yes, what is the approximate percentage of the proposed expansion and identify the units (e.g., acres, miles, housing units, square feet)? % _____ Units: _____

d. Is the proposed action a subdivision, or does it include a subdivision? ☐ Yes ☑ No
If Yes,
i. Purpose or type of subdivision? (e.g., residential, industrial, commercial; if mixed, specify types)
ii. Is a cluster/conservation layout proposed? ☐ Yes ☐ No
iii. Number of lots proposed? _____
iv. Minimum and maximum proposed lot sizes? Minimum _____ Maximum _____

e. Will the proposed action be constructed in multiple phases? ☐ Yes ☑ No
i. If No, anticipated period of construction: 12 months
ii. If Yes:
- Total number of phases anticipated _____
- Anticipated commencement date of phase 1 (including demolition) _____ month _____ year
- Anticipated completion date of final phase _____ month _____ year
- Generally describe connections or relationships among phases, including any contingencies where progress of one phase may determine timing or duration of future phases: _____

f. Does the project include new residential uses? ☑ Yes ☐ No

If Yes, show numbers of units proposed.

	One Family	Two Family	Three Family	Multiple Family (four or more)
Initial Phase				63 apartments
At completion of all phases				

g. Does the proposed action include new non-residential construction (including expansions)? ☐ Yes ☑ No

If Yes,

i. Total number of structures _____

ii. Dimensions (in feet) of largest proposed structure: _____ height; _____ width; and _____ length

iii. Approximate extent of building space to be heated or cooled: _____ square feet

h. Does the proposed action include construction or other activities that will result in the impoundment of any liquids, such as creation of a water supply, reservoir, pond, lake, waste lagoon or other storage? ☐ Yes ☑ No

If Yes,

i. Purpose of the impoundment: _____

ii. If a water impoundment, the principal source of the water: ☐ Ground water ☐ Surface water streams ☐ Other specify:

_____

iii. If other than water, identify the type of impounded/contained liquids and their source.

_____

iv. Approximate size of the proposed impoundment. Volume: _____ million gallons; surface area: _____ acres

v. Dimensions of the proposed dam or impounding structure: _____ height; _____ length

vi. Construction method/materials for the proposed dam or impounding structure (e.g., earth fill, rock, wood, concrete):

_____

D.2. Project Operations

a. Does the proposed action include any excavation, mining, or dredging, during construction, operations, or both? (Not including general site preparation, grading or installation of utilities or foundations where all excavated materials will remain onsite) ☐ Yes ☑ No

If Yes:

i .What is the purpose of the excavation or dredging? _____

ii. How much material (including rock, earth, sediments, etc.) is proposed to be removed from the site?

- Volume (specify tons or cubic yards): _____
- Over what duration of time? _____

iii. Describe nature and characteristics of materials to be excavated or dredged, and plans to use, manage or dispose of them.

_____

_____

iv. Will there be onsite dewatering or processing of excavated materials? ☐ Yes ☐ No

If yes, describe. _____

_____

v. What is the total area to be dredged or excavated? _____ acres

vi. What is the maximum area to be worked at any one time? _____ acres

vii. What would be the maximum depth of excavation or dredging? _____ feet

viii. Will the excavation require blasting? ☐ Yes ☐ No

ix. Summarize site reclamation goals and plan: _____

_____

_____

b. Would the proposed action cause or result in alteration of, increase or decrease in size of, or encroachment into any existing wetland, waterbody, shoreline, beach or adjacent area? ☐ Yes ☑ No

If Yes:

i. Identify the wetland or waterbody which would be affected (by name, water index number, wetland map number or geographic description): _____

_____

ii. Describe how the proposed action would affect that waterbody or wetland, e.g. excavation, fill, placement of structures, or alteration of channels, banks and shorelines. Indicate extent of activities, alterations and additions in square feet or acres:

iii. Will the proposed action cause or result in disturbance to bottom sediments? ☐Yes ☐No
If Yes, describe:

iv. Will the proposed action cause or result in the destruction or removal of aquatic vegetation? ☐Yes ☐No
If Yes:

- acres of aquatic vegetation proposed to be removed:
- expected acreage of aquatic vegetation remaining after project completion:
- purpose of proposed removal (e.g. beach clearing, invasive species control, boat access):
- proposed method of plant removal:
- if chemical/herbicide treatment will be used, specify product(s):

v. Describe any proposed reclamation/mitigation following disturbance:

c. Will the proposed action use, or create a new demand for water? ☑Yes ☐No
If Yes:

i. Total anticipated water usage/demand per day: 11,410 gallons/day

ii. Will the proposed action obtain water from an existing public water supply? ☑Yes ☐No
If Yes:

- Name of district or service area: City of Poughkeepsie
- Does the existing public water supply have capacity to serve the proposal? ☑Yes ☐No
- Is the project site in the existing district? ☑Yes ☐No
- Is expansion of the district needed? ☐Yes ☑No
- Do existing lines serve the project site? ☑Yes ☐No

iii. Will line extension within an existing district be necessary to supply the project? ☐Yes ☑No
If Yes:

- Describe extensions or capacity expansions proposed to serve this project:
- Source(s) of supply for the district:

iv. Is a new water supply district or service area proposed to be formed to serve the project site? ☐ Yes ☑No
If, Yes:

- Applicant/sponsor for new district:
- Date application submitted or anticipated:
- Proposed source(s) of supply for new district:

v. If a public water supply will not be used, describe plans to provide water supply for the project:

vi. If water supply will be from wells (public or private), what is the maximum pumping capacity: _____ gallons/minute.

d. Will the proposed action generate liquid wastes? ☑Yes ☐No
If Yes:

i. Total anticipated liquid waste generation per day: 11,410 gallons/day

ii. Nature of liquid wastes to be generated (e.g., sanitary wastewater, industrial; if combination, describe all components and approximate volumes or proportions of each):
Sanitary wastewater

iii. Will the proposed action use any existing public wastewater treatment facilities? ☑Yes ☐No
If Yes:

- Name of wastewater treatment plant to be used: City of Poughkeepsie Sewage Treatment Plant
- Name of district: City of Poughkeepsie
- Does the existing wastewater treatment plant have capacity to serve the project? ☑Yes ☐No
- Is the project site in the existing district? ☑Yes ☐No
- Is expansion of the district needed? ☐Yes ☑No

- Do existing sewer lines serve the project site? ☑ Yes ☐ No
- Will a line extension within an existing district be necessary to serve the project? ☐ Yes ☑ No

If Yes:

- Describe extensions or capacity expansions proposed to serve this project: _____

iv. Will a new wastewater (sewage) treatment district be formed to serve the project site? ☐ Yes ☑ No

If Yes:

- Applicant/sponsor for new district: _____
- Date application submitted or anticipated: _____
- What is the receiving water for the wastewater discharge? _____

v. If public facilities will not be used, describe plans to provide wastewater treatment for the project, including specifying proposed receiving water (name and classification if surface discharge or describe subsurface disposal plans):

vi. Describe any plans or designs to capture, recycle or reuse liquid waste: _____

e. Will the proposed action disturb more than one acre and create stormwater runoff, either from new point sources (i.e. ditches, pipes, swales, curbs, gutters or other concentrated flows of stormwater) or non-point source (i.e. sheet flow) during construction or post construction? ☑ Yes ☐ No

If Yes:

i. How much impervious surface will the project create in relation to total size of project parcel?

_____ Square feet or 1.84 acres (impervious surface)

_____ Square feet or 8.713 acres (parcel size)

ii. Describe types of new point sources. Subsurface piping and outflow.

iii. Where will the stormwater runoff be directed (i.e. on-site stormwater management facility/structures, adjacent properties, groundwater, on-site surface water or off-site surface waters)?

Stormwater will be conveyed via swales and subsurface piping to an on-site stormwater bioretention basin. The treated water will outflow to the Fallkill Creek.

- If to surface waters, identify receiving water bodies or wetlands: Fallkill Creek
- Will stormwater runoff flow to adjacent properties? ☐ Yes ☑ No

iv. Does the proposed plan minimize impervious surfaces, use pervious materials or collect and re-use stormwater? ☑ Yes ☐ No

f. Does the proposed action include, or will it use on-site, one or more sources of air emissions, including fuel combustion, waste incineration, or other processes or operations? ☑ Yes ☐ No

If Yes, identify:

i. Mobile sources during project operations (e.g., heavy equipment, fleet or delivery vehicles)

ii. Stationary sources during construction (e.g., power generation, structural heating, batch plant, crushers)

Temporary impacts during construction.

iii. Stationary sources during operations (e.g., process emissions, large boilers, electric generation)

Natural gas, boilers

g. Will any air emission sources named in D.2.f (above), require a NY State Air Registration, Air Facility Permit, or Federal Clean Air Act Title IV or Title V Permit? ☐ Yes ☑ No

If Yes:

i. Is the project site located in an Air quality non-attainment area? (Area routinely or periodically fails to meet ambient air quality standards for all or some parts of the year) ☐ Yes ☐ No

ii. In addition to emissions as calculated in the application, the project will generate:

- _____Tons/year (short tons) of Carbon Dioxide (CO_2)
- _____Tons/year (short tons) of Nitrous Oxide (N_2O)
- _____Tons/year (short tons) of Perfluorocarbons (PFCs)
- _____Tons/year (short tons) of Sulfur Hexafluoride (SF_6)
- _____Tons/year (short tons) of Carbon Dioxide equivalent of Hydroflourocarbons (HFCs)
- _____Tons/year (short tons) of Hazardous Air Pollutants (HAPs)

h. Will the proposed action generate or emit methane (including, but not limited to, sewage treatment plants, landfills, composting facilities)? ☐Yes ☑No

If Yes:

i. Estimate methane generation in tons/year (metric): _____

ii. Describe any methane capture, control or elimination measures included in project design (e.g., combustion to generate heat or electricity, flaring): _____

i. Will the proposed action result in the release of air pollutants from open-air operations or processes, such as quarry or landfill operations? ☐Yes ☑No

If Yes: Describe operations and nature of emissions (e.g., diesel exhaust, rock particulates/dust):

j. Will the proposed action result in a substantial increase in traffic above present levels or generate substantial new demand for transportation facilities or services? ☑Yes ☐No

See Section 6 for details.

If Yes:

i. When is the peak traffic expected (Check all that apply): ☑ Morning ☑ Evening ☐Weekend ☐ Randomly between hours of _____ to _____.

ii. For commercial activities only, projected number of truck trips/day and type (e.g., semi trailers and dump trucks): _____

iii. Parking spaces: Existing 0 Proposed 124 Net increase/decrease +124

iv. Does the proposed action include any shared use parking? ☐Yes ☑No

v. If the proposed action includes any modification of existing roads, creation of new roads or change in existing access, describe:

Access will be provided off Milton Street in a one-way access pattern.

vi. Are public/private transportation service(s) or facilities available within ½ mile of the proposed site? ☑Yes ☐No

vii Will the proposed action include access to public transportation or accommodations for use of hybrid, electric or other alternative fueled vehicles? ☐Yes ☑No

viii. Will the proposed action include plans for pedestrian or bicycle accommodations for connections to existing pedestrian or bicycle routes? ☑Yes ☐No

k. Will the proposed action (for commercial or industrial projects only) generate new or additional demand for energy? ☐Yes ☑No

If Yes:

i. Estimate annual electricity demand during operation of the proposed action: _____

ii. Anticipated sources/suppliers of electricity for the project (e.g., on-site combustion, on-site renewable, via grid/local utility, or other):

iii. Will the proposed action require a new, or an upgrade, to an existing substation? ☐Yes ☐No

l. Hours of operation. Answer all items which apply.

i. During Construction:

- Monday - Friday: Approximately 6:30 AM to 9:00 PM
- Saturday: Approximately 6:30 AM to 9:00 PM
- Sunday: None
- Holidays: None

ii. During Operations:

- Monday - Friday: 24 hours
- Saturday: 24 hours
- Sunday: 24 hours
- Holidays: 24 hours

m. Will the proposed action produce noise that will exceed existing ambient noise levels during construction, operation, or both? ☑ Yes ☐ No

If yes:

i. Provide details including sources, time of day and duration:

Temporary noise generated during construction activities will be limited to weekdays 6:30 AM to 9 PM.

ii. Will the proposed action remove existing natural barriers that could act as a noise barrier or screen? ☑ Yes ☐ No

Describe: The majority of the site is undeveloped wooded area. Approximately 2.246 acres will be cleared; Landscaping pursuant to Zoning Ordinance requirements will be implemented.

n. Will the proposed action have outdoor lighting? ☑ Yes ☐ No

If yes:

i. Describe source(s), location(s), height of fixture(s), direction/aim, and proximity to nearest occupied structures:

To be determined

ii. Will proposed action remove existing natural barriers that could act as a light barrier or screen? ☑ Yes ☐ No

Describe: The majority of the site is undeveloped wooded area. Approximately 2.246 acres will be cleared; Lighting pursuant to Zoning Ordinance requirements will be implemented.

o. Does the proposed action have the potential to produce odors for more than one hour per day? ☐ Yes ☑ No

If Yes, describe possible sources, potential frequency and duration of odor emissions, and proximity to nearest occupied structures: _____

p. Will the proposed action include any bulk storage of petroleum (combined capacity of over 1,100 gallons) or chemical products 185 gallons in above ground storage or any amount in underground storage? ☐ Yes ☑ No

If Yes:

i. Product(s) to be stored _____

ii. Volume(s) _____ per unit time _____ (e.g., month, year)

iii. Generally, describe the proposed storage facilities: _____

q. Will the proposed action (commercial, industrial and recreational projects only) use pesticides (i.e., herbicides, insecticides) during construction or operation? ☐ Yes ☑ No

If Yes:

i. Describe proposed treatment(s):

ii. Will the proposed action use Integrated Pest Management Practices? ☐ Yes ☐ No

r. Will the proposed action (commercial or industrial projects only) involve or require the management or disposal of solid waste (excluding hazardous materials)? ☐ Yes ☑ No

If Yes:

i. Describe any solid waste(s) to be generated during construction or operation of the facility:

- Construction: _____ tons per _____ (unit of time)
- Operation : _____ tons per _____ (unit of time)

ii. Describe any proposals for on-site minimization, recycling or reuse of materials to avoid disposal as solid waste:

- Construction: _____
- Operation: _____

iii. Proposed disposal methods/facilities for solid waste generated on-site:

- Construction: _____
- Operation: _____

s. Does the proposed action include construction or modification of a solid waste management facility? ☐ Yes ☑ No

If Yes:

i. Type of management or handling of waste proposed for the site (e.g., recycling or transfer station, composting, landfill, or other disposal activities): _____

ii. Anticipated rate of disposal/processing:

- _____ Tons/month, if transfer or other non-combustion/thermal treatment, or
- _____ Tons/hour, if combustion or thermal treatment

iii. If landfill, anticipated site life: _____ years

t. Will the proposed action at the site involve the commercial generation, treatment, storage, or disposal of hazardous waste? ☐ Yes ☑ No

If Yes:

i. Name(s) of all hazardous wastes or constituents to be generated, handled or managed at facility: _____

ii. Generally describe processes or activities involving hazardous wastes or constituents: _____

iii. Specify amount to be handled or generated _____ tons/month

iv. Describe any proposals for on-site minimization, recycling or reuse of hazardous constituents: _____

v. Will any hazardous wastes be disposed at an existing offsite hazardous waste facility? ☐ Yes ☐ No

If Yes: provide name and location of facility: _____

If No: describe proposed management of any hazardous wastes which will not be sent to a hazardous waste facility:

E. Site and Setting of Proposed Action

E.1. Land uses on and surrounding the project site

a. Existing land uses.

i. Check all uses that occur on, adjoining and near the project site.

☑ Urban ☑ Industrial ☑ Commercial ☑ Residential (suburban) ☐ Rural (non-farm)
☐ Forest ☐ Agriculture ☑ Aquatic ☑ Other (specify): public services

ii. If mix of uses, generally describe:

b. Land uses and covertypes on the project site.

Land use or Covertype	Current Acreage	Acreage After Project Completion	Change (Acres +/-)
• Roads, buildings, and other paved or impervious surfaces	0.000	1.84	+1.84
• Forested	7.755	3.306	-4.449
• Meadows, grasslands or brushlands (non-agricultural, including abandoned agricultural)	0	2.609	+2.609
• Agricultural (includes active orchards, field, greenhouse etc.)	0	0	0
• Surface water features (lakes, ponds, streams, rivers, etc.)	0	0	0
• Wetlands (freshwater or tidal)	0.788	0.778	0
• Non-vegetated (bare rock, earth or fill)	0.17	0.17	0
• Other Describe: _____			

c. Is the project site presently used by members of the community for public recreation? ☐ Yes ☑ No

i. If Yes: explain: _____

d. Are there any facilities serving children, the elderly, people with disabilities (e.g., schools, hospitals, licensed day care centers, or group homes) within 1500 feet of the project site? ☐ Yes ☑ No

If Yes,

i. Identify Facilities:

_____

_____

e. Does the project site contain an existing dam? ☐ Yes ☑ No

If Yes:

i. Dimensions of the dam and impoundment:

- Dam height: _____ feet
- Dam length: _____ feet
- Surface area: _____ acres
- Volume impounded: _____ gallons OR acre-feet

ii. Dam's existing hazard classification: _____

iii. Provide date and summarize results of last inspection:

_____

_____

f. Has the project site ever been used as a municipal, commercial or industrial solid waste management facility, or does the project site adjoin property which is now, or was at one time, used as a solid waste management facility? ☐ Yes ☑ No

If Yes:

i. Has the facility been formally closed? ☐ Yes ☐ No

- If yes, cite sources/documentation: _____

ii. Describe the location of the project site relative to the boundaries of the solid waste management facility:

_____

_____

iii. Describe any development constraints due to the prior solid waste activities: _____

_____

g. Have hazardous wastes been generated, treated and/or disposed of at the site, or does the project site adjoin property which is now or was at one time used to commercially treat, store and/or dispose of hazardous waste? ☐ Yes ☑ No

If Yes:

i. Describe waste(s) handled and waste management activities, including approximate time when activities occurred:

_____

_____

h. Potential contamination history. Has there been a reported spill at the proposed project site, or have any remedial actions been conducted at or adjacent to the proposed site? ☐ Yes ☐ No

If Yes:

i. Is any portion of the site listed on the NYSDEC Spills Incidents database or Environmental Site Remediation database? Check all that apply: ☐ Yes ☐ No

☐ Yes – Spills Incidents database Provide DEC ID number(s): _____

☐ Yes – Environmental Site Remediation database Provide DEC ID number(s): _____

☐ Neither database

ii. If site has been subject of RCRA corrective activities, describe control measures: _____

_____

_____

iii. Is the project within 2000 feet of any site in the NYSDEC Environmental Site Remediation database? ☑ Yes ☐ No

If yes, provide DEC ID number(s): 314136

iv. If yes to (i), (ii) or (iii) above, describe current status of site(s):

DEC Spill database indicates that there are no spills on site. Therefore, this spill must be off-site.

_____

v. Is the project site subject to an institutional control limiting property uses? ☐ Yes ☑ No

- If yes, DEC site ID number: _____
- Describe the type of institutional control (e.g., deed restriction or easement): _____
- Describe any use limitations: _____
- Describe any engineering controls: _____
- Will the project affect the institutional or engineering controls in place? ☐ Yes ☐ No
- Explain: _____

E.2. Natural Resources On or Near Project Site

a. What is the average depth to bedrock on the project site? <1 ft to > 5 feet

b. Are there bedrock outcroppings on the project site? ☐ Yes ☐ No
If Yes, what proportion of the site is comprised of bedrock outcroppings? 1 %

c. Predominant soil type(s) present on project site:

Dutchess Cardigan Complex (DwC)	87.4 %
Dutchess Cardigan Urban (DxC)	8.3 %
Udorthents	4.3 %

d. What is the average depth to the water table on the project site? Average: > 2 ft to > 6 feet

e. Drainage status of project site soils:

☑	Well Drained:	99 % of site
☑	Moderately Well Drained:	1 % of site
☐	Poorly Drained	% of site

f. Approximate proportion of proposed action site with slopes:

☑	0-10%:	note % of site
☑	10-15%:	note % of site
☑	15% or greater:	note % of site

Note: See Section 4.

g. Are there any unique geologic features on the project site? ☐ Yes ☑ No
If Yes, describe: _____

h. Surface water features.

i. Does any portion of the project site contain wetlands or other waterbodies (including streams, rivers, ponds or lakes)? ☑ Yes ☐ No

ii. Do any wetlands or other waterbodies adjoin the project site? See Section 4 for details. ☑ Yes ☐ No

If Yes to either *i* or *ii*, continue. If No, skip to E.2.i.

iii. Are any of the wetlands or waterbodies within or adjoining the project site regulated by any federal, state or local agency? ☑ Yes ☐ No

iv. For each identified regulated wetland and waterbody on the project site, provide the following information:

- Streams: Name 862-393 Classification C
- Lakes or Ponds: Name _____ Classification _____
- Wetlands: Name Federal Waters, Federal Waters, Federal Waters,... Approximate Size 0.788 acres
- Wetland No. (if regulated by DEC) _____

v. Are any of the above water bodies listed in the most recent compilation of NYS water quality-impaired waterbodies? ☑ Yes ☐ No

If yes, name of impaired water body/bodies and basis for listing as impaired: _____
Name - Pollutants - Uses:Fall Kill and tribs - Total Phosphorus

i. Is the project site in a designated Floodway? ☐ Yes ☑ No

j. Is the project site in the 100-year Floodplain? ☑ Yes ☐ No

k. Is the project site in the 500-year Floodplain? ☐ Yes ☑ No

l. Is the project site located over, or immediately adjoining, a primary, principal or sole source aquifer? ☐ Yes ☑ No
If Yes:

i. Name of aquifer: _____

m. Identify the predominant wildlife species that occupy or use the project site:
Common Dutchess County species

n. Does the project site contain a designated significant natural community? ☐ Yes ☑ No
If Yes:
i. Describe the habitat/community (composition, function, and basis for designation):
ii. Source(s) of description or evaluation:
iii. Extent of community/habitat:
- Currently: acres
- Following completion of project as proposed: acres
- Gain or loss (indicate + or -): acres

o. Does project site contain any species of plant or animal that is listed by the federal government or NYS as endangered or threatened, or does it contain any areas identified as habitat for an endangered or threatened species? ☑ Yes ☐ No
If Yes:
i. Species and listing (endangered or threatened):
Blanding's Turtle (NYSDEC) Indiana Bat (USFWS)

p. Does the project site contain any species of plant or animal that is listed by NYS as rare, or as a species of special concern? ☐ Yes ☑ No
If Yes:
i. Species and listing:

q. Is the project site or adjoining area currently used for hunting, trapping, fishing or shell fishing? ☐ Yes ☑ No
If yes, give a brief description of how the proposed action may affect that use:

E.3. Designated Public Resources On or Near Project Site

a. Is the project site, or any portion of it, located in a designated agricultural district certified pursuant to Agriculture and Markets Law, Article 25-AA, Section 303 and 304? ☐ Yes ☑ No
If Yes, provide county plus district name/number:

b. Are agricultural lands consisting of highly productive soils present? ☐ Yes ☑ No
i. If Yes: acreage(s) on project site?
ii. Source(s) of soil rating(s):

c. Does the project site contain all or part of, or is it substantially contiguous to, a registered National Natural Landmark? ☐ Yes ☑ No
If Yes:
i. Nature of the natural landmark: ☐ Biological Community ☐ Geological Feature
ii. Provide brief description of landmark, including values behind designation and approximate size/extent:

d. Is the project site located in or does it adjoin a state listed Critical Environmental Area? ☐ Yes ☑ No
If Yes:
i. CEA name:
ii. Basis for designation:
iii. Designating agency and date:

e. Does the project site contain, or is it substantially contiguous to, a building, archaeological site, or district which is listed on the National or State Register of Historic Places, or that has been determined by the Commissioner of the NYS Office of Parks, Recreation and Historic Preservation to be eligible for listing on the State Register of Historic Places? ☐ Yes ☑ No

If Yes: See Section 8 for details.

i. Nature of historic/archaeological resource: ☐ Archaeological Site ☐ Historic Building or District

ii. Name: _____

iii. Brief description of attributes on which listing is based:

_____

f. Is the project site, or any portion of it, located in or adjacent to an area designated as sensitive for archaeological sites on the NY State Historic Preservation Office (SHPO) archaeological site inventory? ☐ Yes ☑ No

g. Have additional archaeological or historic site(s) or resources been identified on the project site? ☐ Yes ☑ No

If Yes:

i. Describe possible resource(s): _____

ii. Basis for identification: _____

h. Is the project site within fives miles of any officially designated and publicly accessible federal, state, or local scenic or aesthetic resource? ☑ Yes ☐ No

If Yes:

i. Identify resource: (See Figure 9)

ii. Nature of, or basis for, designation (e.g., established highway overlook, state or local park, state historic trail or scenic byway, etc.): (See Figure 9)

iii. Distance between project and resource: (See Figure 9) miles.

i. Is the project site located within a designated river corridor under the Wild, Scenic and Recreational Rivers Program 6 NYCRR 666? ☐ Yes ☑ No

If Yes:

i. Identify the name of the river and its designation: _____

ii. Is the activity consistent with development restrictions contained in 6NYCRR Part 666? ☐ Yes ☐ No

F. Additional Information

Attach any additional information which may be needed to clarify your project.

If you have identified any adverse impacts which could be associated with your proposal, please describe those impacts plus any measures which you propose to avoid or minimize them.

G. Verification

I certify that the information provided is true to the best of my knowledge.

Applicant/Sponsor Name Maselo Realty, LLC (Simon Abikhzer) Date October 28, 2025

Signature Danielle Stark Danielle Stark, Agent for Applicant Title Planner / Project Manager, LaBella Associates

PRINT FORM

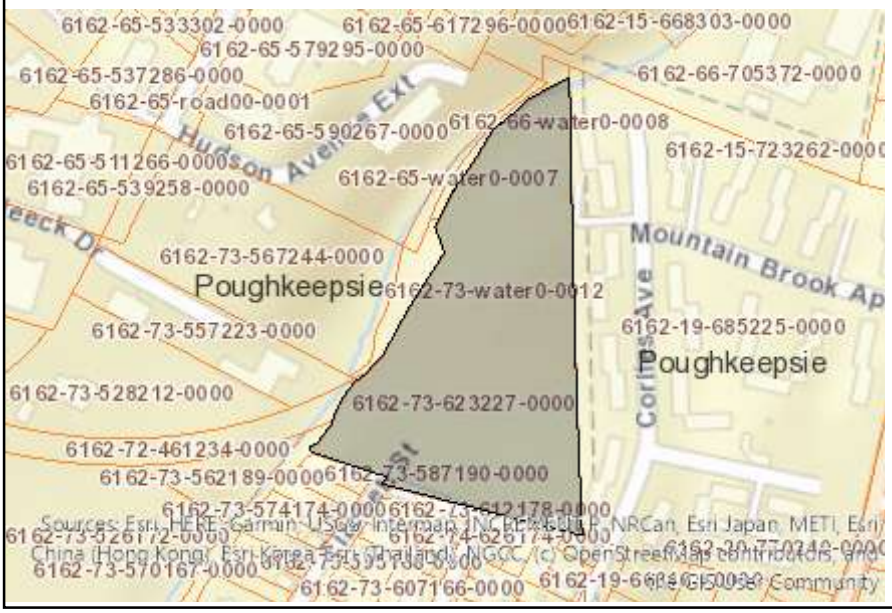

Disclaimer: The EAF Mapper is a screening tool intended to assist project sponsors and reviewing agencies in preparing an environmental assessment form (EAF). Not all questions asked in the EAF are answered by the EAF Mapper. Additional information on any EAF question can be obtained by consulting the EAF Workbooks. Although the EAF Mapper provides the most up-to-date digital data available to DEC, you may also need to contact local or other data sources to confirm data provided by the Mapper or to obtain data not provided by the Mapper.



B.i.i [Coastal or Waterfront Area]	No
B.i.ii [Local Waterfront Revitalization Area]	No
C.2.b. [Special Planning District]	Digital mapping data are not available or are incomplete. Refer to EAF Workbook.
E.1.h [DEC Spills or Remediation Site - Potential Contamination History]	Digital mapping data are not available or are incomplete. Refer to EAF Workbook.
E.1.h.i [DEC Spills or Remediation Site - Listed]	Digital mapping data are not available or are incomplete. Refer to EAF Workbook.
E.1.h.i [DEC Spills or Remediation Site - Environmental Site Remediation Database]	Digital mapping data are not available or are incomplete. Refer to EAF Workbook.
E.1.h.iii [Within 2,000' of DEC Remediation Site]	Yes
E.1.h.iii [Within 2,000' of DEC Remediation Site - DEC ID]	314136
E.2.g [Unique Geologic Features]	No
E.2.h.i [Surface Water Features]	Yes - Digital mapping information on local, New York State, and federal wetlands and waterbodies is known to be incomplete. Refer to the EAF Workbook.
E.2.h.ii [Surface Water Features]	Yes - Digital mapping information on local, New York State, and federal wetlands and waterbodies is known to be incomplete. Refer to the EAF Workbook.
E.2.h.iii [Surface Water Features]	Yes - Digital mapping information on local, New York State, and federal wetlands and waterbodies is known to be incomplete. Refer to the EAF Workbook.
E.2.h.iv [Surface Water Features - Stream Name]	862-393
E.2.h.iv [Surface Water Features - Stream Classification]	C

E.2.h.iv [Surface Water Features - Wetlands Name]	Federal Waters
E.2.h.v [Impaired Water Bodies]	Yes
E.2.h.v [Impaired Water Bodies - Name and Basis for Listing]	Name - Pollutants - Uses:Fall Kill and tribs - Total Phosphorus
E.2.i. [Floodway]	No
E.2.j. [100 Year Floodplain]	Yes
E.2.k. [500 Year Floodplain]	No
E.2.l. [Aquifers]	No
E.2.n. [Natural Communities]	No
E.2.o. [Endangered or Threatened Species]	Yes
E.2.o. [Endangered or Threatened Species - Name]	Blanding's Turtle
E.2.p. [Rare Plants or Animals]	No
E.3.a. [Agricultural District]	No
E.3.c. [National Natural Landmark]	No
E.3.d [Critical Environmental Area]	No
E.3.e. [National or State Register of Historic Places or State Eligible Sites]	Digital mapping data are not available or are incomplete. Refer to EAF Workbook.
E.3.f. [Archeological Sites]	No
E.3.i. [Designated River Corridor]	No

FIGURES

Figure 1: USGS Location Map

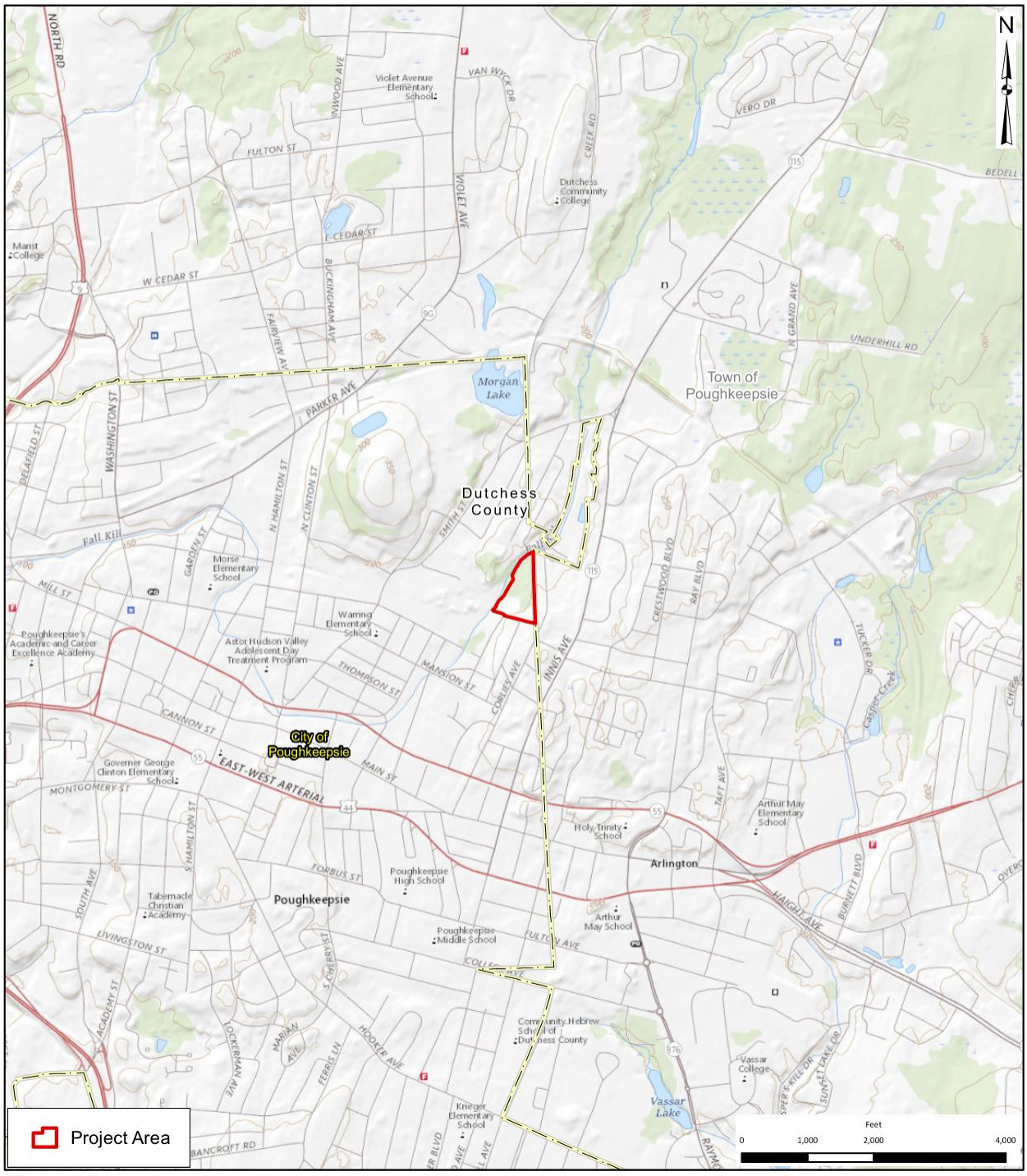

Figure 2: Orthophoto Tax Map



Figure 3: Land Use Map

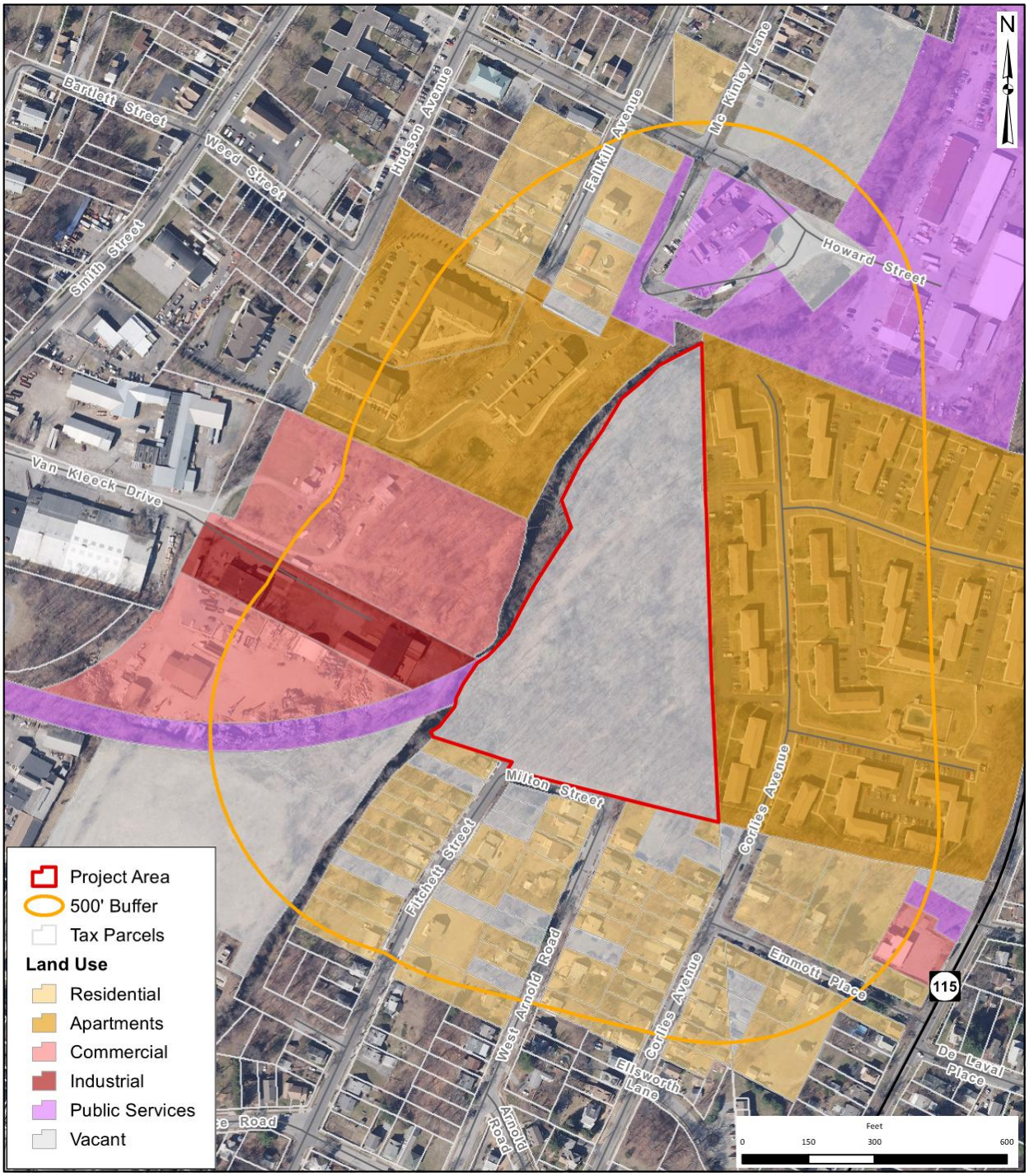

Figure 4: Zoning Map, Existing and Proposed

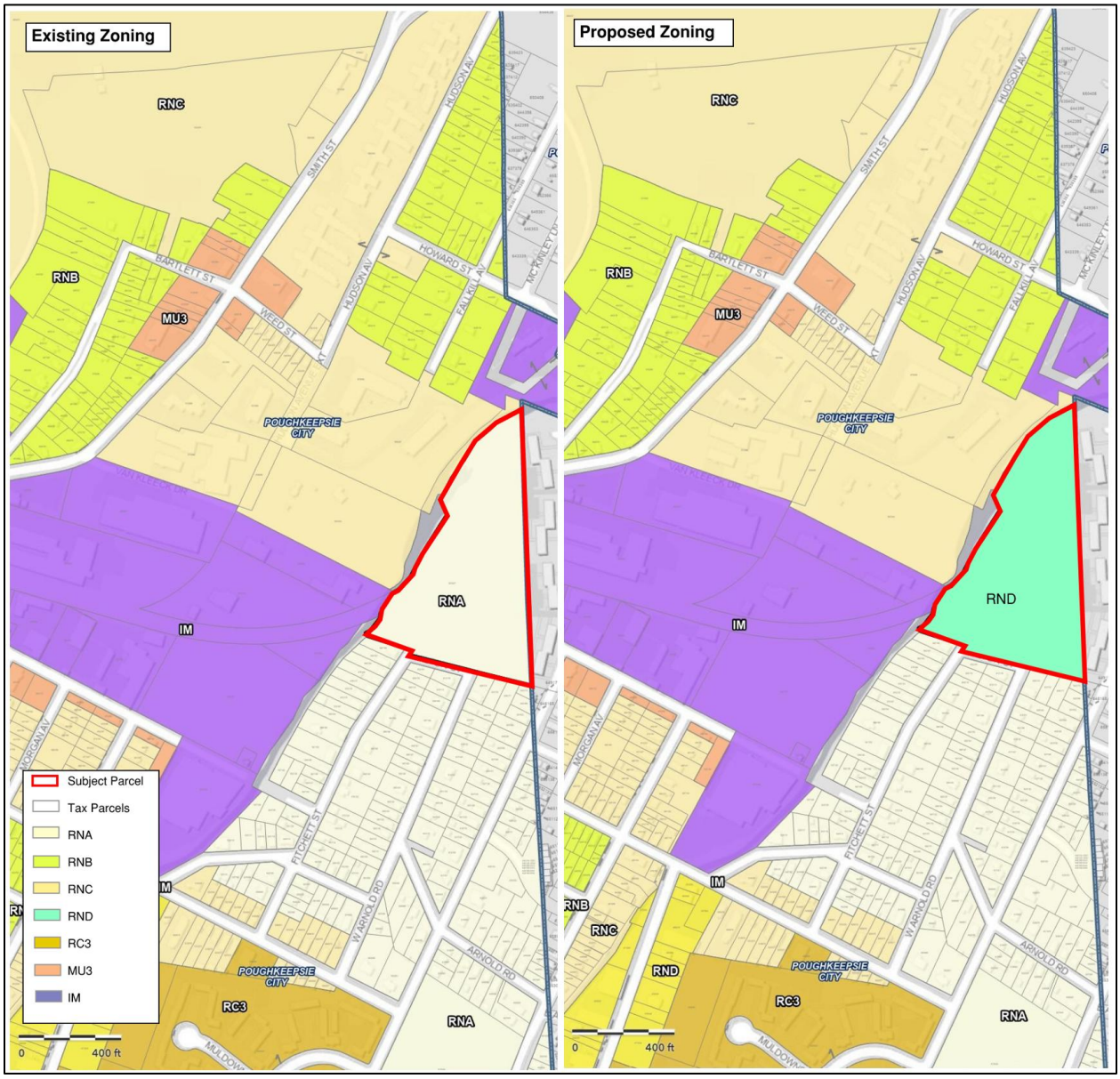

Figure 5: Soil Map



Figure 6: Wetland, Stream and Floodplain Map

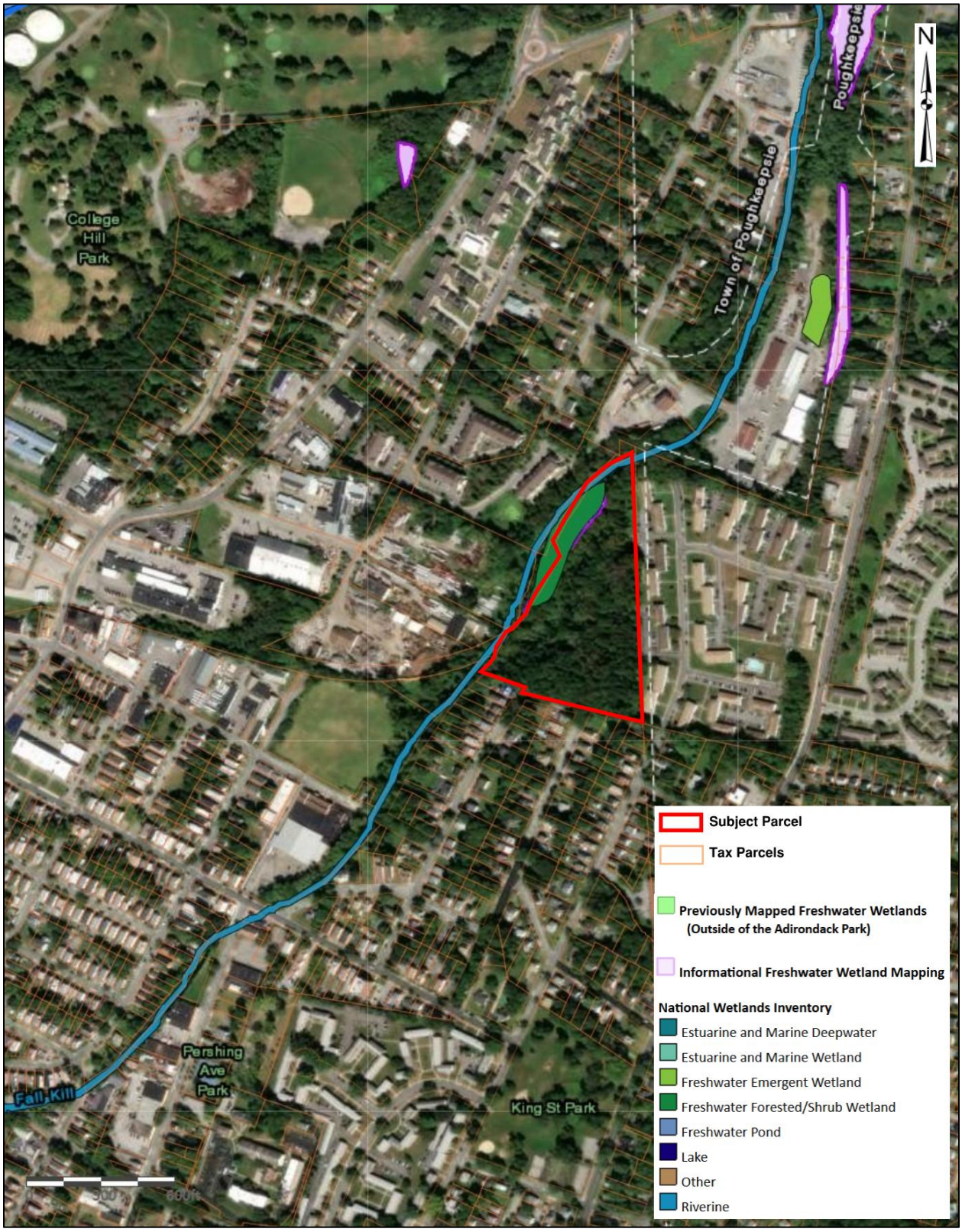

Figure 7: NYSDEC Environmental Resource Map

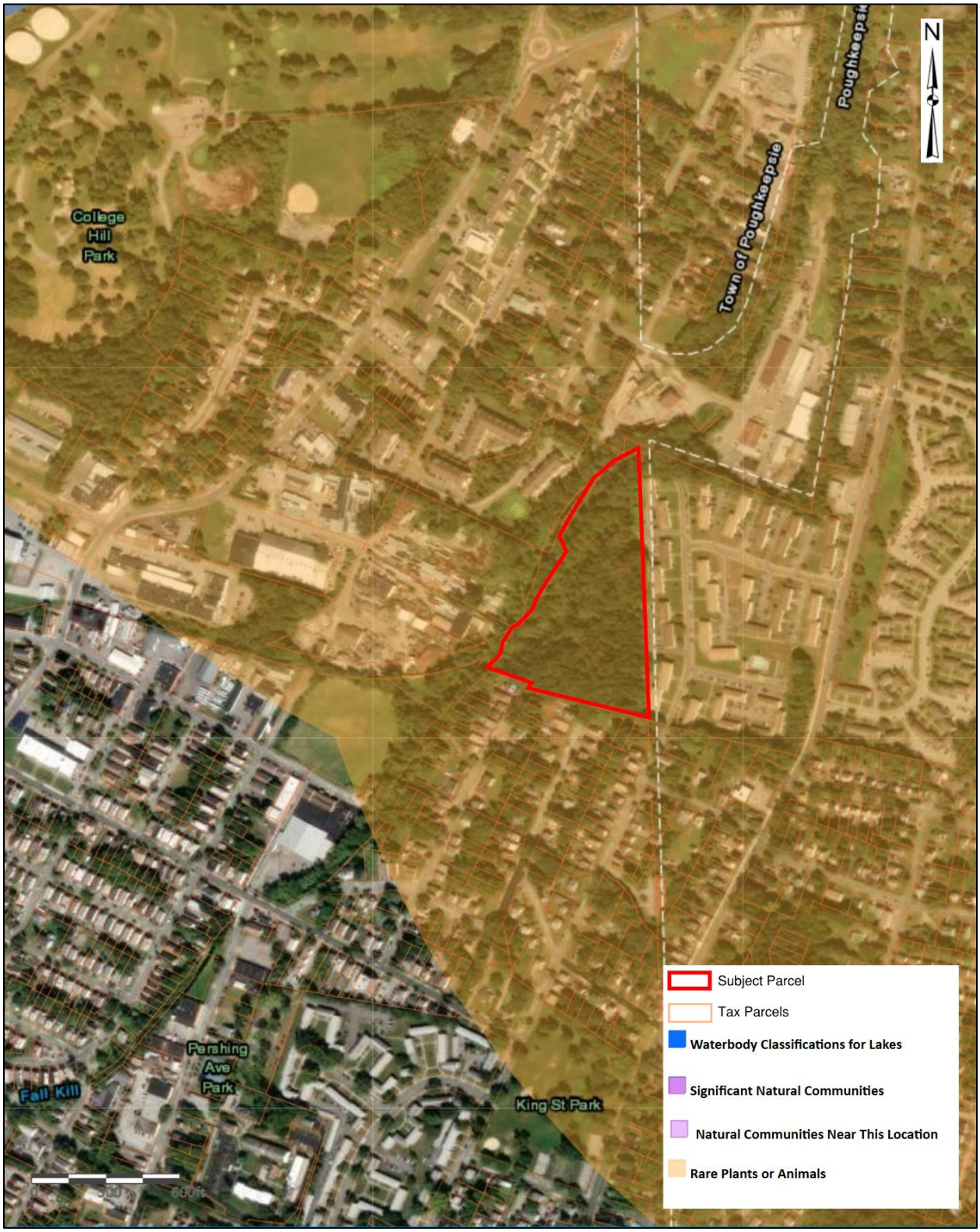

Figure 8: NYSOPRHP Cultural Resource Information System (CRIS) Map

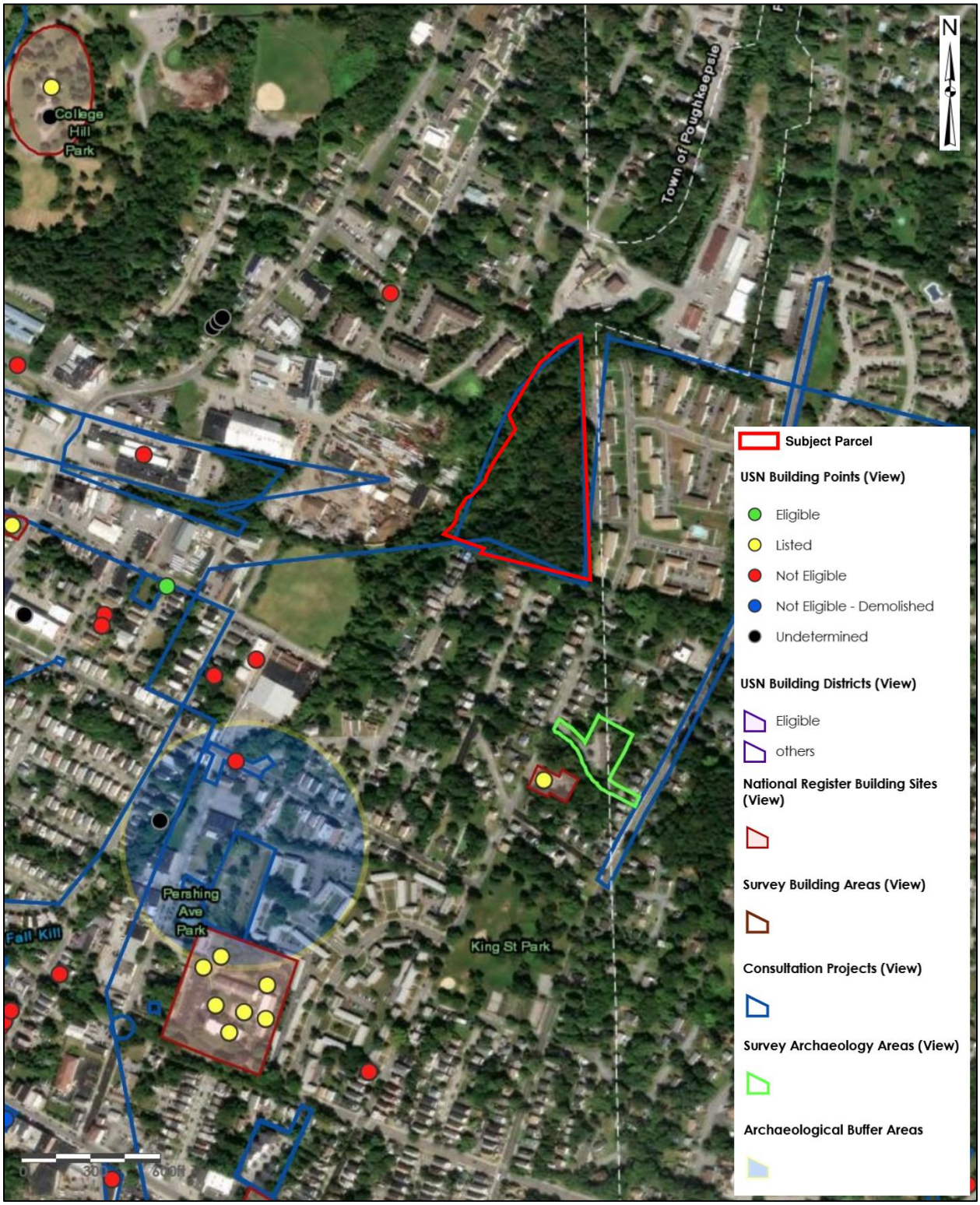

Figure 9: Map of Publicly Accessible Federal, State, or Local Scenic of Aesthetic Resources

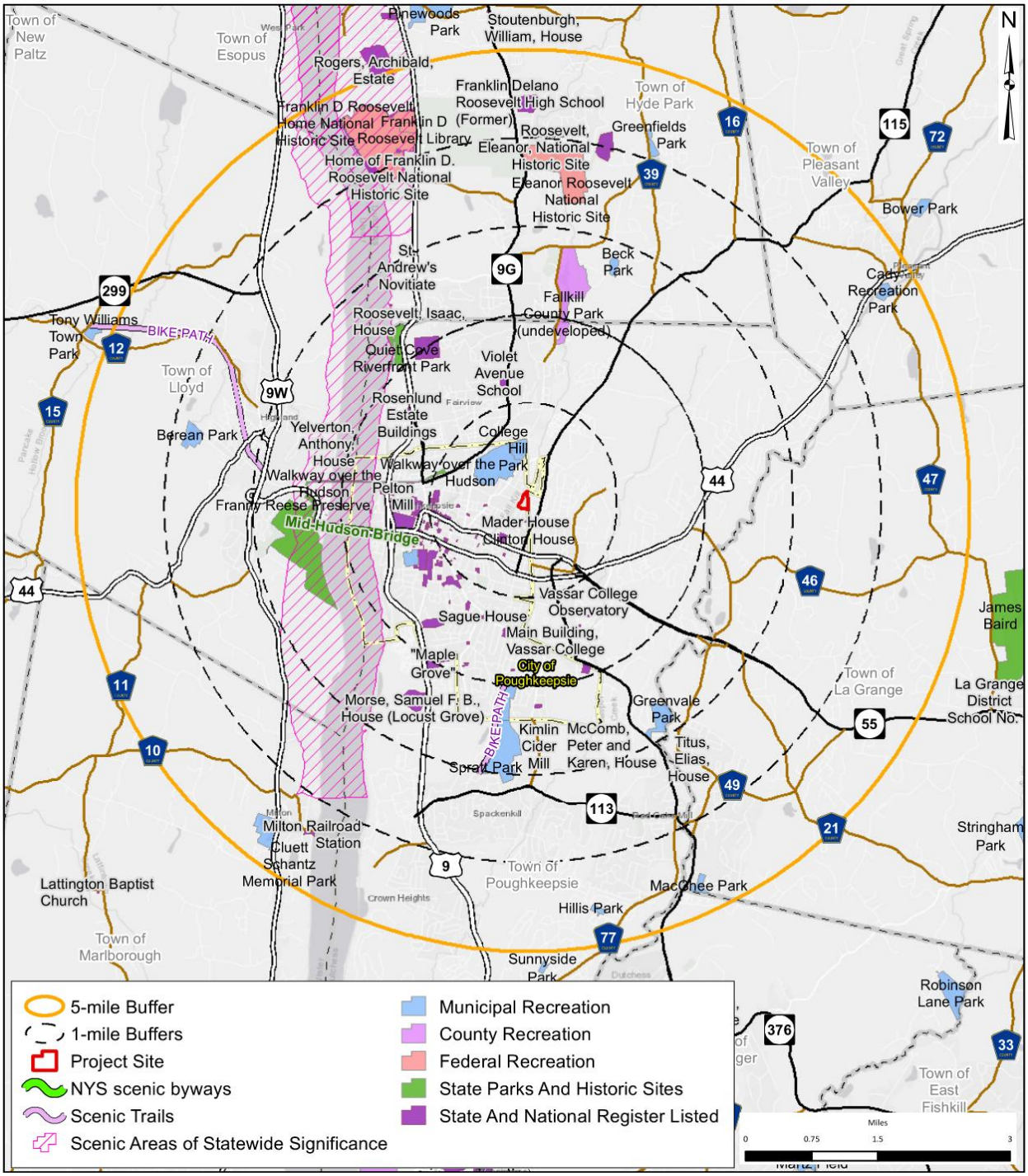

ATTACHMENT A
Councilwoman Flowers Letter of Support

THE CITY OF POUGHKEEPSIE
NEW YORK

August 10, 2020

Ms. Natalie Quinn, Planning Director
City of Poughkeepsie
62 Civic Center Plaza
Poughkeepsie, New York 12601

Re: Highview II: Proposed 64-Unit Residential Development (Maselo Realty LLC)
Milton Street (Tax Parcel 131300-6162-73-623227), City of Poughkeepsie

Dear Ms. Quinn:

I am writing to provide my support for Maselo Realty, LLC's application for a proposed rezoning of the Milton Street property to a Planned Residential Development (PRD) Zoning District to facilitate the construction of a 64-apartment unit clustered multifamily development within two buildings off Milton Street.

The Applicant, represented by Simon and Nate Abikzer, have undertaken community outreach for this project which involved two community meetings that I hosted. One meeting was held at City Hall, Common Council Chambers in which you attended and the other meeting was held at 505 Main Street, Public Safety Bldg. Renderings of the proposed project were shared with the residents who live near the proposed project and many of them asked questions about the project and voiced their concerns.

The meetings were well advertised. I hand delivered flyers to all the residents on Corlies Ave, W. Arnold Road, Fitchett Street and Lawrence Road, explaining the proposed project and inviting them to the meetings. I also sent text messages and call residents who I had contact info, reminding them of the meeting so due diligence was made to inform all residents of the project. Residents of the area who were able to attend were very vocal of what they wanted and not want to see. The exchange of ideas resulted in the current site plan design. The applicant assured the residents that they will be "good neighbors" and ensure that the two buildings will have minimum visibility so it will not infringe on the existing neighborhood.

Based on the fact that the project will be no more than 64 units, the feedback from the residents who attended the meetings and the applicant's genuine efforts in addressing the concerns of the residents in the immediate area, I am in support of the proposed rezoning of the Milton Street property and construction of the 64 apartment unit.

Please feel free to contact me to discuss further if needed.

Thank you

Sincerely,

Councilperson Yvonne Flowers
5th Ward, City of Poughkeepsie
(845) 505-2735/email: yflowers@cityofpoughkeepsie.com

ATTACHMENT B
Natural Resource Information

Poughkeepsie Natural Resource Inventory
Conservation Analysis
Highview at the Fallkill Creek
Milton Street
City of Poughkeepsie
Dutchess County, New York



October 28, 2025

Prepared for:
Maselo Realty, LLC
18 Eastview Road
Monsey, NY, 10952

Prepared by:
LaBella Associates
21 Fox Street Suite 201
Poughkeepsie, NY 12601
845-454-3980

Project No. 81947.00

TABLE OF CONTENTS

1.0 INTRODUCTION 1
1.1 Project Summary 1
1.2 Background 1
1.3 Site Description and Project Details 2
1.4 Anticipated Permits/Approvals 2
2.0 CONSERVATION ANALYSIS 3
2.1 Geology and Soils 3
2.2 Water Resources 5
2.3 Habitats 6
2.4 Land Use 7
2.5 Historic Resources 7
2.6 Recreational Resources 8
2.7 Conclusion 8

LIST OF TABLES

Table 1: Anticipated Approvals/Permits 3
Table 2: Characteristics of Soil Types within Project Area 4

FIGURES

Figure 1: Geology and Soils
Figure 2: Water Resources
Figure 3: Habitats
Figure 4: NYSDEC Environmental Resource Map
Figure 5: Land Use Map
Figure 6: NYSOPRHP Cultural Resources Information System Map
Figure 7: Historic Resources
Figure 8: Recreational Resources

ATTACHMENTS

Attachment A: US Fish & Wildlife Service (USFWS) Official Species List

Note: Concept Plan submitted separately.

1.0 INTRODUCTION

1.1 Project Summary

The Applicant and Owner, Maselo Realty, LLC, is proposing the rezoning of an 8.713-acre tax parcel on Milton Street in the City of Poughkeepsie from Residential Neighborhood A (RNA) to Residential Neighborhood D (RND) for the construction of a 63-apartment unit clustered multifamily development within two buildings with one access off Milton Street. The parcel is identified as parcel number 131300-6162-73-623227 on the City of Poughkeepsie Tax Map. The Town of Poughkeepsie abuts the eastern edge of the property (see Figures 1 and 2).

The parcel is currently undeveloped and zoned for Residential Neighborhood A (RNA) within which multifamily (i.e. 5+ unit) residential development is not permitted. Therefore, to facilitate the proposed project, the Applicant is petitioning the City for a rezoning of the property from RNA to RND by the Common Council. Upon completion of the rezoning, the Applicant will seek site plan approval from the Planning Board.

1.2 Background

On April 25, 2006, the City of Poughkeepsie Planning Board granted site plan approval for the construction of a 120-unit condominium complex to be known as Highview at the Fallkill Creek, located on the north side of Milton Street. The Applicant was Phoenix Capital Partners, LLC. The parcel was zoned as Medium High-Density Residential (R-4) at that time, which would have permitted a maximum of 140 dwelling units based on the R-4 requirements and lot size. The original project was never undertaken, and site plan approvals lapsed. The site was subsequently rezoned to Medium Low-Density Residence District (R-2) in October 2010.

When the Applicant decided to pursue the project again in 2019, the parcel was zoned for Medium Low-Density Residential (R-2) within which multifamily development was not permitted. Therefore, to facilitate the proposed project, the Applicant petitioned the City for a rezoning of the property from R-2 to PRD by the Common Council. The Planning Board as lead agency determined that the action was an unlisted action and upon examination of the Full Environmental Assessment Form (FEAF) and 6 N.Y.C.R.R Section 617.7 of the State Environmental Quality Review Act (SEQRA), adopted a negative declaration on January 20, 2021. The rezoning approval was granted by the Common Council on February 16, 2021 (Common Council Ordinance 0-21-01).

The Common Council and City's Mayor approved the amendment to the Zoning Map on February 18, 2021. On May 25, 2021, the owner filed an application for site plan approval from the Planning Board for the project under the PRD regulations. After filing an area variance application to the Zoning Board of Appeals on June 6, 2021, the Applicant received approval for three area variances on September 14, 2021 to enable the proposed development.

Since then, the application has been on numerous agendas of the Planning Board and multiple extensions have been granted for the rezoning petitions. In addition to Planning Board meetings, the project

underwent two community meetings in 2019 and has received support from Councilwoman Flowers, see Attachment A for a letter of support.

On September 6, 2024, a Municipal Consent to Form a Sewage-Works Corporation was approved by the Common Council and the Mayor. On November 4, 2024 the property was rezoned to RNA as part of the Common Council's adoption of the City of Poughkeepsie Zoning Ordinance, along with entire neighborhood of primarily single-family dwellings to the north (which provides the only access to the property).

Accordingly, the Applicant seeks a rezoning to the RND Zoning District to permit the proposed the 63-unit development. The project remains as proposed previously, with no changes to unit count or access.

1.3 Site Description and Project Details

The project parcel is located in the northeast quadrant of the city, along the city/town border, with access to the site on Milton Street by way of Fitchett Street and West Arnold Road. The project site consists of vacant wooded land. Fallkill Creek runs along the western property line and within the property for approximately 200 linear feet. The development proposal, referenced as Highview at the Fallkill Creek – Milton Street, includes 63 multifamily dwelling units clustered within two buildings in the southeast portion of the project parcel. The unit breakdown is anticipated to include approximately 31 one-bedroom and 32 two-bedroom units.

The development will be located away from Milton Street (approximately 209 feet) with a substantial natural buffer. The finished floor of the southern building's (Building 100 on Sheet C130) ground floor will be approximately 18 ft lower than Milton Street. The development will not directly impact wetlands or the Fallkill Creek and is approximately 128.5 – 145.7 feet away from the Creek. The development will occupy approximately 60% of the 8.713-acre property allowing for approximately 40% of the site to remain undisturbed including 373 trees or approximately 67.5% of trees currently found on the site.

1.4 Anticipated Permits/Approvals

Table 1 provides a list of the approvals/permits that are anticipated for the project.

Table 1: Anticipated Approvals/Permits

AGENCY	APPROVAL/PERMIT
City of Poughkeepsie Common Council	Rezoning from RNA to RND
City of Poughkeepsie Planning Board	Site plan approval
City of Poughkeepsie – Engineering Department	Curb cut approval
City of Poughkeepsie – Zoning Administrator	Floodplain development permit
Dutchess County Department of Planning and Development	GML 239m referral
Dutchess County Department of Health	Water and Sewer Connections
NYS Department of Environmental Conservation (NYSDEC)*	GP-0-25-001 SPDES General Permit for Discharges during Construction Activities; Article 24 Adjacent Area for grading (pending)

*An Article 15 permit from NYSDEC was identified in the SEQR FEAF Part 1 form dated 12/3/2019 in case disturbance within the bank was required as part of the project (not currently anticipated to occur). However, the FallKill is not a Trout Stream; therefore, as a Class C stream with no "t" or "ts" standard it is not regulated by the NYSDEC under Article 15. Therefore, this permit is not required and is not identified here.

2.0 CONSERVATION ANALYSIS

The Fall Kill is identified in the *Natural Resources Inventory for the City of Poughkeepsie* (referred to herein as the NRI Report) as a natural resource that supports or contributes to beautification, habitat, flood control, history, recreation and climate resilience. The project site is discussed throughout the document as a parcel, "that is undeveloped and contains streamside forests and wetlands within the floodplain. Due to the lack of channelization, this area floods readily without harming buildings or roads. It is an important flood mitigation area as it is the only segment of the creek in the City of Poughkeepsie where flooding can naturally occur."[1] The Applicant recognizes the unique character and benefits provided by his property and is working to develop a plan that is sensitive to these attributes while also providing new housing opportunities.

2.1 Geology and Soils

According to the NRI Report, the project site's bedrock geology is Graywacke and shale, which is considered less permeable than other types of bedrock found in the City of Poughkeepsie. The surficial geology of the site features bedrock outcrops. These rock outcrop areas are shown on the concept plan.

Figure 1 shows the soil types that are expected to be present on the project site, and Table 2 provides characteristics of these soil types, according to the Dutchess County Soil Survey information available in GIS and the Natural Resource Conservation Service website.

[1] The Environmental Cooperative at Vassar Barns. *Natural Resources Inventory for the City of Poughkeepsie*. 2019. Page 10.

Table 2: Characteristics of Soil Types within Project Area

% of SITE	SOIL SYMBOL	SOIL TYPE	SLOPES	DRAINAGE	DEPTH TO WATER TABLE (FEET)	DEPTH TO BEDROCK (INCHES)
	DwC	Dutchess-Cardigan complex, rolling, rocky	5 to 16%	well	>6	
		Dutchess (40%)		well	>6	>60
		Cardigan (30%)		well	>6	20 to 40
	DxC	Dutchess-Cardigan-Urban Land complex, rolling, rocky	5 to 16%			
		Dutchess (25%)		well	>6	>60
		Cardigan (25%)		well	>6	20 to 40
		Urban Land (25%)		well	>2	>10
	Ud	Udorthents, smoothed	mostly 0 to 8% but 8 to 25% on sides of excavations & along highways	somewhat excessively to moderately well	>3.0 Nov-Jun	>60

Most of the site contains the Dutchess-Cardigan complex, rolling, rocky soil series (DwC). An area of the Dutchess-Cardigan-Urban Land complex soil series (DxC) exists along Milton Street, and an area of Udorthents soil series (Ud) exists in the southwest corner of the project parcel. The Dutchess soils and the Cardigan soils are well drained soils. The Udorthents soil series is a somewhat excessively to moderately well drained soil. Urban Land is described as areas covered by buildings, streets, parking lots and other impervious surfaces, which obscure soil identification, so that the actual identification of the soil is not determined for some portions of the site. The Dutchess soil series, the Cardigan soil series, and the Udorthents soil series all have a depth to water table of greater than 6 feet. Urban Land is described as areas covered by buildings, streets, parking lots and other impervious surfaces which obscure soil identification, so that the actual identification of the soil is not determined for some portions of the site. Therefore, the depth to water table for these areas is unknown, and is assumed to be greater than 2 feet according to the Soil Survey.

According to a geotechnical engineering report by the Chazen Companies for the previously approved site plan, groundwater was encountered in only one of eight borings.[2] These borings ranged in depth from 5.5 feet to 15.8 feet due to refusal at bedrock, with the exception of the northernmost boring in which refusal occurred at 2.5 feet. Thus, groundwater was generally deeper than 5.5 feet throughout most of the site. The report states that, "groundwater seepage into open excavations is not anticipated at this time, but that the contractor should be prepared to lower the groundwater table two feet below the base of

[2] *Geotechnical Engineering Report*, The Chazen Companies, September 14, 2005.

excavations to provide a stable subgrade for construction activities and to maintain the integrity of the natural bearing soils."

If water is encountered above three feet below the surface, footings and footing drains will be designed in accordance with accepted construction practices to alleviate any problems associated with a high water table. With this practice, no significant impacts due to the presence of water above three feet below the surface are anticipated.

Rock encountered during the construction of the proposed residential development will be removed by mechanical methods (ripping), when possible. If blasting is determined to be necessary, all blasting operations will adhere to New York State and local ordinances governing the use of explosives. Proper program guidelines will be established between New York State, the City of Poughkeepsie and the blasting contractor prior to undertaking this activity. If blasting is required, it will be performed in accordance with New York State Department of Transportation (NYSDOT) Geotechnical Engineering Manual #22 "Procedures for Blasting" latest edition.

2.2 Water Resources

As shown in Figure 2, the project site abuts and includes some portions (approximately 200 linear feet) of the Fall Kill, a perennial stream. In addition, the project site includes wetland, riparian and flood hazard areas (or 100-year floodplain area). The Fall Kill watershed covers 19.5 square miles, including portions of the City of Poughkeepsie. The Fall Kill is approximately 38 miles long, and where it travels through the City it has been channelized and is contained by stone walls before it charges into the Hudson River. The Fallkill has been found to contain various chemicals and bacteria, with deterioration being most prevalent within the City.

The site features approximately 0.788 acres of wetland area (freshwater forested/shrub wetland (PFO1E)), which is regulated by the United States Army Corps of Engineers (USACE). No New York State Department of Environmental Conservation (NYSDEC) regulated wetlands are located on the site. The Fall Kill is classified as a Class C stream by the NYSDEC, which is not regulated. It is anticipated that the proposed site design will not result in impacts to wetlands or to the Fall Kill and no wetland or stream-related permits are being sought from the USACE or NYSDEC.

According to the NRI Report, "Riparian buffers are vegetated areas alongside the creek that help to protect the creek by slowing runoff, infiltrating water, providing shade that cools the water, and reducing the amount of sediment and pollutants entering the stream."[3] Theses areas can provide nesting or foraging habitat for many species of birds. The concept plan has been designed to avoid the riparian buffer areas and concentrates development upland within the site.

The property is identified in the NRI Report as one of the last remaining areas within the City of Poughkeepsie where the Fall Kill is not channelized and is permitted to flood naturally. This section of the Fall Kill is identified as a significant habitat area that provides important flood retention due to the undeveloped forested riparian buffer. The NRI Report explains that during flood events the Fall Kill may overflow into these wetlands, which are located within the flood hazard area or 100-year floodplain.

[3] The Environmental Cooperative at Vassar Barns. *Natural Resources Inventory for the City of Poughkeepsie*. 2019. Page 47.

According to the NRI Report, "flooding helps to slow down water, recharge groundwater and increase water quality by letting particulates settle out instead of being carried downstream."[4] According to FEMA Community Panel Number 36027C0358E information (effective 5/12/2012) available through GIS (Figure 6), an area abutting the Fallkill Creek is located within Zone AE (100-year floodplain) or special flood hazard area. The floodplain area is identified on the concept plan. Some work (e.g. grading) is anticipated to occur within the 100-year floodplain; therefore, a floodplain development permit will be sought from the City.

The proposed development is located upland from the stream, wetland, riparian and floodplain areas with the intention of retaining these important resources. With the exception of a floodplain development permit for grading in the floodplain, no permits affecting aquatic resources are anticipated at this time. The proposed project will require greater than one acre of disturbance and will require coverage under the State Pollutant Discharge Elimination System (SPDES) General Permit for Stormwater Discharges from Construction Activity. A Stormwater Pollution Prevention Plan will be prepared in conformance with the most current New York State Stormwater Management Design Manual and New York State Standards and Specifications for Erosion and Sediment Control.

2.3 Habitats

According to the NRI Report, the project site is home to several habitats, including upland shrubland, upland hardwood forest, upland mixed forest and hardwood swamp in addition to wetland and stream areas (Figure 3). Table 2 presents a brief description of these habitats based on information found in the report.

Table 2: Habitat Types on the Project Site

Specific Habitat Type	Brief Description
Upland Shrubland	Open (nonforested) area with shrubs making up >20% of ground cover
Upland Hardwood Forest	Non-wetland forest dominated by hardwood trees (conifers make up 25% of canopy)
Upland Mixed Forest	Non-wetland forest with a mix of hardwoods and conifers (conifers make up 25-75% of canopy)
Hardwood Swamp	Wetland (identified by predominance of hydrophytic vegetation) dominated by trees and/or shrubs

According to the NRI Report, "the Fall Kill is highly impacted by channelization and pollution, nonetheless it continues to serve as an important habitat for migratory fish species such as the American eel and river herring." The Upland Hardwood Forest, which currently dominates the site, is described as a habitat that is also important for cooling derived from shade, carbon sequestration, reducing stormwater runoff, and improvement of air quality. According to the NYSDEC Environmental Resource Map (Figure 4), there are known occurrences of the Blanding's Turtle (State listed threatened species) on or in the vicinity of the project site. An analysis to assess potential adverse impacts to Blandings Turtle was completed and

[4] The Environmental Cooperative at Vassar Barns. *Natural Resources Inventory for the City of Poughkeepsie*. 2019. Page 46.

received sign off from the NYSDEC. This information has been submitted separately. There is no NYSDEC Significant Natural Community identified on the project site. According to the US Fish & Wildlife Service (USFWS) Official Species List (Attachment A), there is potential for the Indiana Bat (endangered), Northern Long-eared Bat, and Tricolored Bat on or in the vicinity of the project site. It is anticipated that tree clearing will occur between November 1st and March 31st to avoid direct or indirect take of the bat species, as during this time, the bats would be hibernating and not present onsite.

The Fall Kill is identified as a conservation priority in the NRI Report because it, "provides streamside habitats, helps to reduce and filter surface runoff, provides shading vegetation, and provides organic material that supports the food web and habitat structure of the stream."[5] Based on this rationale a priority conservation zone of 160 feet from the stream edge is recommended to increase habitat area and improve in-stream conditions.

The project site is identified in Map 4.4, "Habitat Envelopes and Potential Corridors" within the NRI Report as a Significant Habitat Area. The Report states that, "if new development in these areas cannot be avoided, it should be concentrated near the edges and near existing roads and other development so that as much habitat area as possible is preserved without fragmentation."[6]

As explained in earlier sections, a large buffer (131 feet) and distance (146 – 160 feet away) will separate the Fall Kill Creek from the proposed development. Based on the information provided above, no significant adverse impacts will occur to vegetation and wildlife. This information will be provided to NYSDEC.

2.4 Land Use

The parcel is currently undeveloped and zoned for Residential Neighborhood A (RNA). To the north and west, the property is abutted by Residential Neighborhood C (RNC) and Industrial Mixed (IM) zoning districts, which house a range of uses including multi-family housing (Highridge Garden Apartments), a junkyard, the City's Department of Public Works complex, and manufacturing uses. The southern portion of the lot abuts more RNA district properties, comprised primarily of single-family residences (Figure 5). To the east, in the Town of Poughkeepsie, the property is abutted by a parcel zoned for Multifamily Residence (Town of Poughkeepsie) which contains a large apartment complex, Mountain Brook Apartments.

The proposed residential project is not industrial or commercial and is not likely to result in a source of pollution that could endanger the Fall Kill.

2.5 Historic Resources

According to the NYS Office of Parks, Recreation, and Historic Preservation (NYSOPRHP) Cultural Resource Information System (CRIS) mapping (Figure 6), the project site does not contain and is not adjacent to any National or State Historic Register sites or any sites that were determined to be eligible for listing on the

[5] The Environmental Cooperative at Vassar Barns. *Natural Resources Inventory for the City of Poughkeepsie*. 2019. Page 73.
[6] The Environmental Cooperative at Vassar Barns. *Natural Resources Inventory for the City of Poughkeepsie*. 2019. Page 221 or page 85 of Appendix A.

National or State Historic Register. The CRIS mapping indicates that the project site is partially located within a known archeologically sensitive area. The Applicant received a Letter of No Effect from the NYSOPRHP State Historic Preservation Office on December 17, 2020.

The NRI Report does not identify any historic resources on or adjacent to the project site, see Figure 7.

2.6 Recreational Resources

The project site is located on privately-owned land that is not currently used by the public for recreation, see Figure 8. The site would be developed with two residential apartment buildings. Residents would likely use King Street Park located approximately 1/2 mile south of the site. This park features a playground, baseball diamond, tennis court, basketball court and a flower garden.

2.7 Conclusion

The property is identified in the NRI Report as one of the last remaining areas within the City of Poughkeepsie where the Fall Kill is not channeled and is permitted to flood naturally. Approximately one-third of the property falls within the City's flood area boundary and contains both upland hardwood forest and upland shrubland habitat. These characteristics make the site ideally suited to the clustering of development away from the creek, which will retain existing habitat.

The Applicant is proposing construction of a 63-unit clustered multifamily apartment development within two buildings with access off Milton Street on an approximately 8.713-acre property. Due to the clustered nature of the site design under the proposed RND regulations approximately 40 percent of the existing forested area will be retained on site. In contrast, the strict application of the RNA zoning for the provision of single-family homes, whether a clustered or conventional subdivision, would result in greater ground disturbance and loss of natural habitat.

FIGURES

Page left intentionally blank

Figure 1

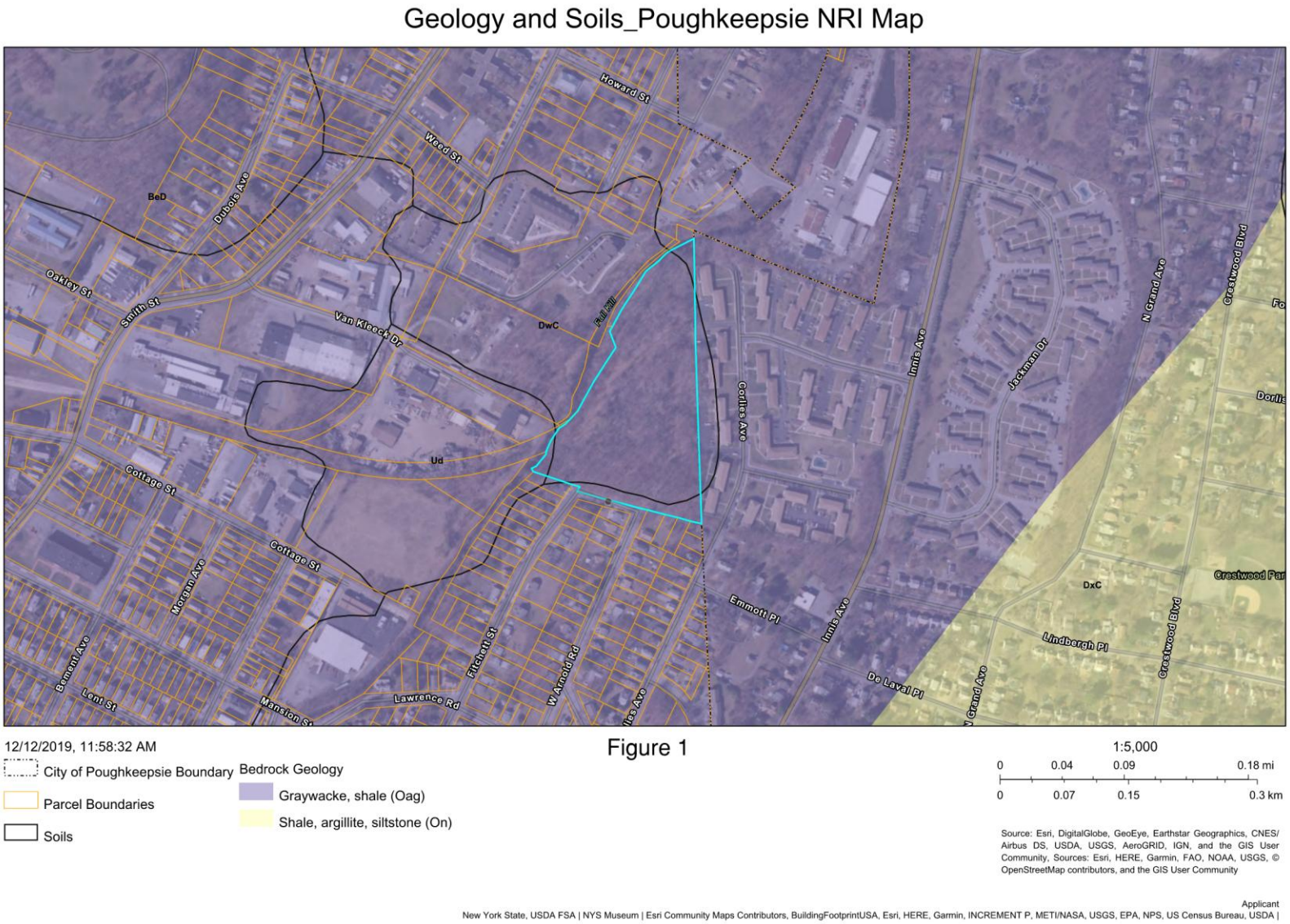
Geology and Soils_Poughkeepsie NRI Map
Howard St
Weed St
BeD
Dubois Ave
Oakley St
Smith St
Van Kleeck Dr
DwC
Full Mill
Ud
Cottage St
Morgan Ave
Bement Ave
Lent St
Mansion St
Lawrence Rd
Fitchett St
W Arnold Rd
Ilas Ave
Corlies Ave
Innis Ave
Jackman Dr
N Grand Ave
Crestwood Blvd
Emmott Pl
DxC
Lindbergh Pl
De Laval Pl
12/12/2019, 11:58:32 AM
City of Poughkeepsie Boundary
Parcel Boundaries
Soils
Bedrock Geology
Graywacke, shale (Oag)
Shale, argillite, siltstone (On)
Figure 1
1:5,000
0 0.04 0.09 0.18 mi
0 0.07 0.15 0.3 km
Source: Esri, DigitalGlobe, GeoEye, Earthstar Geographics, CNES/ Airbus DS, USDA, USGS, AeroGRID, IGN, and the GIS User Community, Sources: Esri, HERE, Garmin, FAO, NOAA, USGS, © OpenStreetMap contributors, and the GIS User Community
Applicant
New York State, USDA FSA | NYS Museum | Esri Community Maps Contributors, BuildingFootprintUSA, Esri, HERE, Garmin, INCREMENT P, METI/NASA, USGS, EPA, NPS, US Census Bureau, USDA |

Figure 2

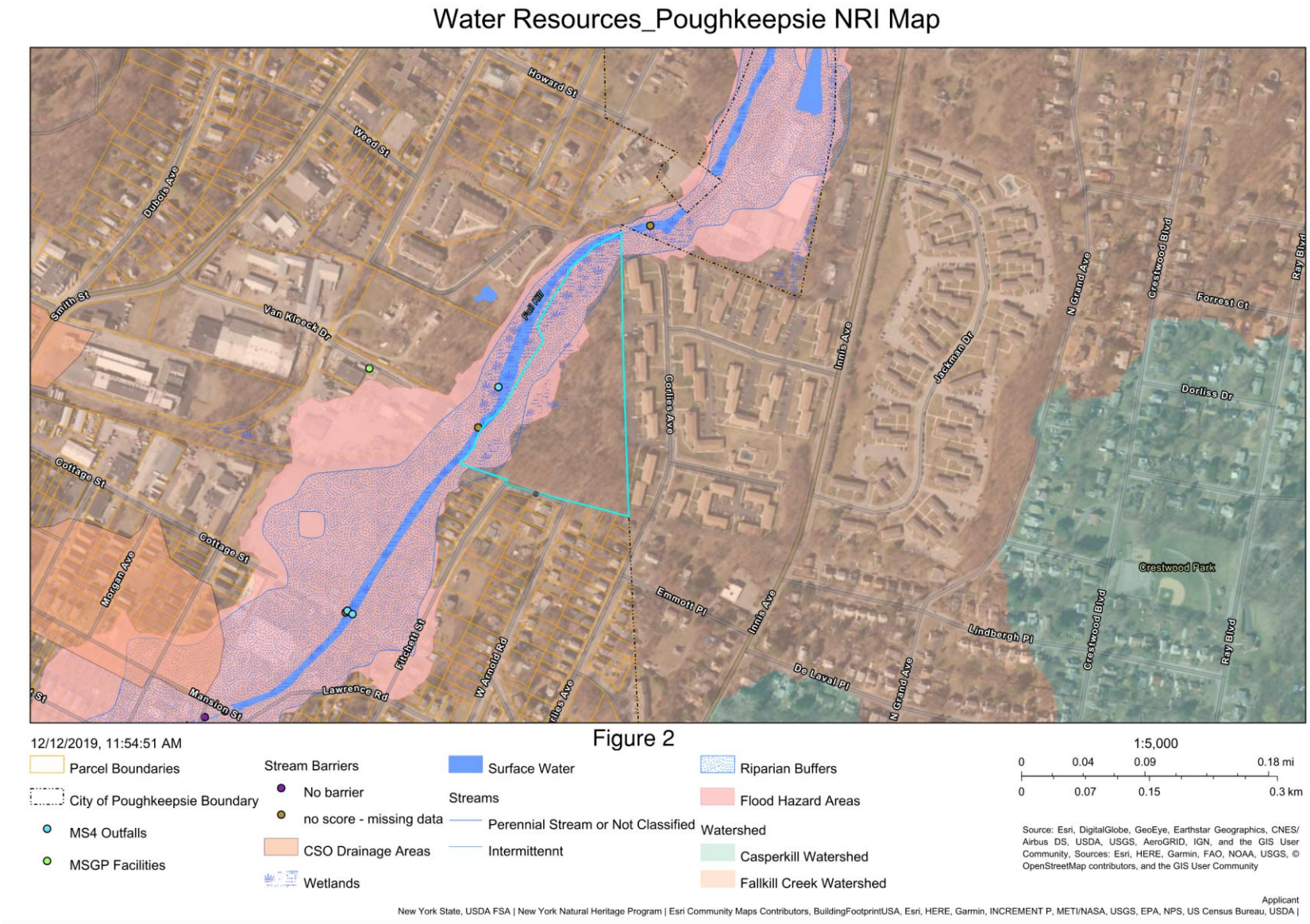
Water Resources_Poughkeepsie NRI Map
Howard St
Weed St
Dubois Ave
Smith St
Van Kleeck Dr
Fall Kill
Cottage St
Morgan Ave
Fitchett St
W Arnold Rd
Lawrence Rd
Mansion St
Coolies Ave
Innis Ave
Jackmin Dr
N Grand Ave
Crestwood Blvd
Forrest Ct
Ray Blvd
Dorliss Dr
Crestwood Park
Emmott Pl
Lindbergh Pl
De Laval Pl
Figure 2
12/12/2019, 11:54:51 AM
Parcel Boundaries
City of Poughkeepsie Boundary
MS4 Outfalls
MSGP Facilities
Stream Barriers
No barrier
no score - missing data
CSO Drainage Areas
Wetlands
Surface Water
Streams
Perennial Stream or Not Classified
Intermittennt
Riparian Buffers
Flood Hazard Areas
Watershed
Casperkill Watershed
Fallkill Creek Watershed
1:5,000
0 0.04 0.09 0.18 mi
0 0.07 0.15 0.3 km
Source: Esri, DigitalGlobe, GeoEye, Earthstar Geographics, CNES/ Airbus DS, USDA, USGS, AeroGRID, IGN, and the GIS User Community, Sources: Esri, HERE, Garmin, FAO, NOAA, USGS, © OpenStreetMap contributors, and the GIS User Community
Applicant
New York State, USDA FSA | New York Natural Heritage Program | Esri Community Maps Contributors, BuildingFootprintUSA, Esri, HERE, Garmin, INCREMENT P, METI/NASA, USGS, EPA, NPS, US Census Bureau, USDA |

Figure 3

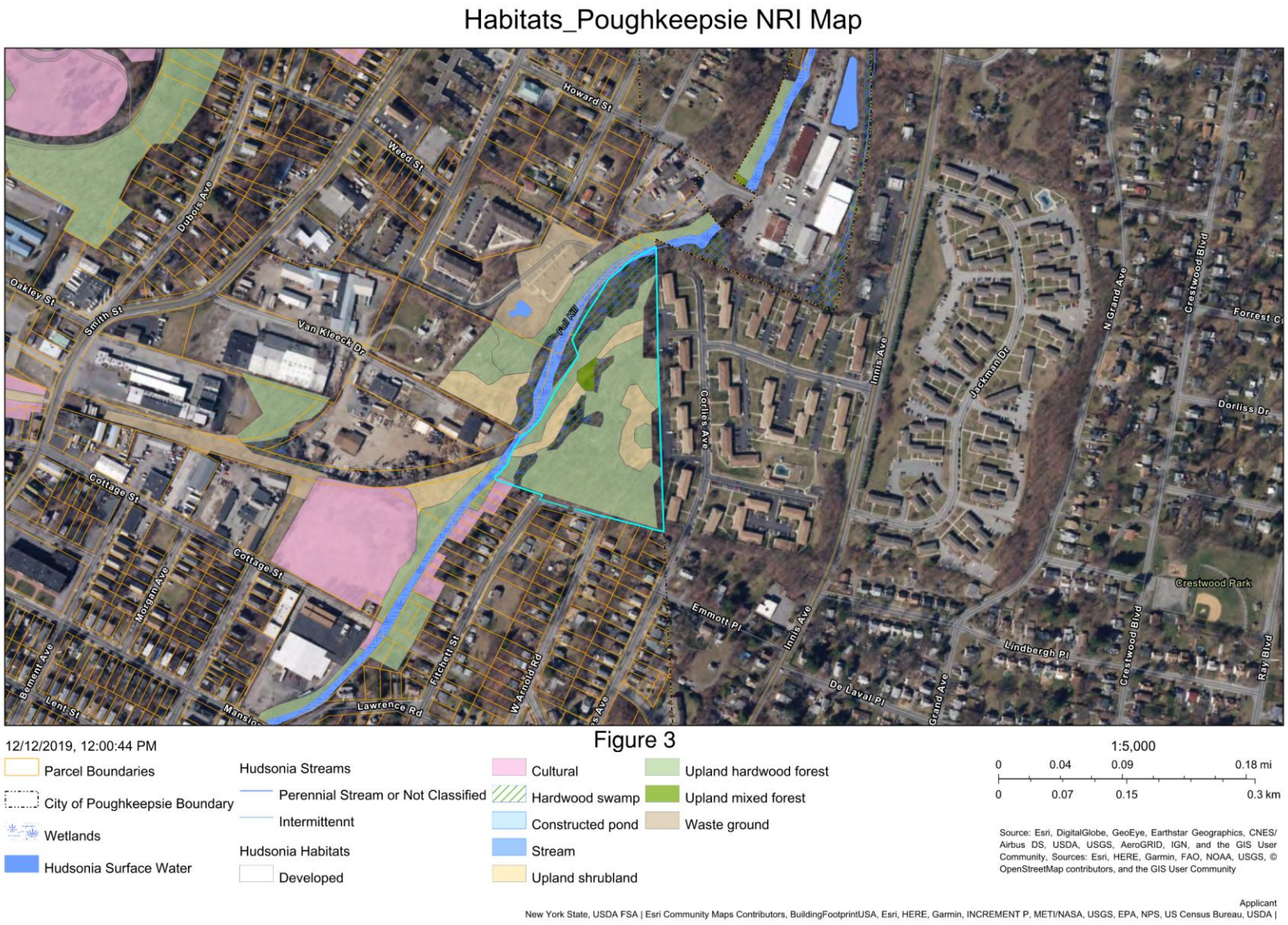
Habitats_Poughkeepsie NRI Map
Howard St
Weed St
Dubois Ave
Oakley St
Smith St
Van Kleeck Dr
Fall Kill
Cottage St
Morgan Ave
Bement Ave
Lent St
Lawrence Rd
Fitchett St
W Arnold Rd
Corlies Ave
Innis Ave
Jackman Dr
N Grand Ave
Crestwood Blvd
Forrest C
Dorliss Dr
Crestwood Park
Emmett Pl
Lindbergh Pl
De Laval Pl
Grand Ave
Ray Blvd
Figure 3
12/12/2019, 12:00:44 PM
Parcel Boundaries
City of Poughkeepsie Boundary
Wetlands
Hudsonia Surface Water
Hudsonia Streams
Perennial Stream or Not Classified
Intermittennt
Hudsonia Habitats
Developed
Cultural
Hardwood swamp
Constructed pond
Stream
Upland shrubland
Upland hardwood forest
Upland mixed forest
Waste ground
1:5,000
0 0.04 0.09 0.18 mi
0 0.07 0.15 0.3 km
Source: Esri, DigitalGlobe, GeoEye, Earthstar Geographics, CNES/ Airbus DS, USDA, USGS, AeroGRID, IGN, and the GIS User Community, Sources: Esri, HERE, Garmin, FAO, NOAA, USGS, © OpenStreetMap contributors, and the GIS User Community
Applicant
New York State, USDA FSA | Esri Community Maps Contributors, BuildingFootprintUSA, Esri, HERE, Garmin, INCREMENT P, METI/NASA, USGS, EPA, NPS, US Census Bureau, USDA |

Page left intentionally blank

Figure 4

NYSDEC Environmental Resource Map

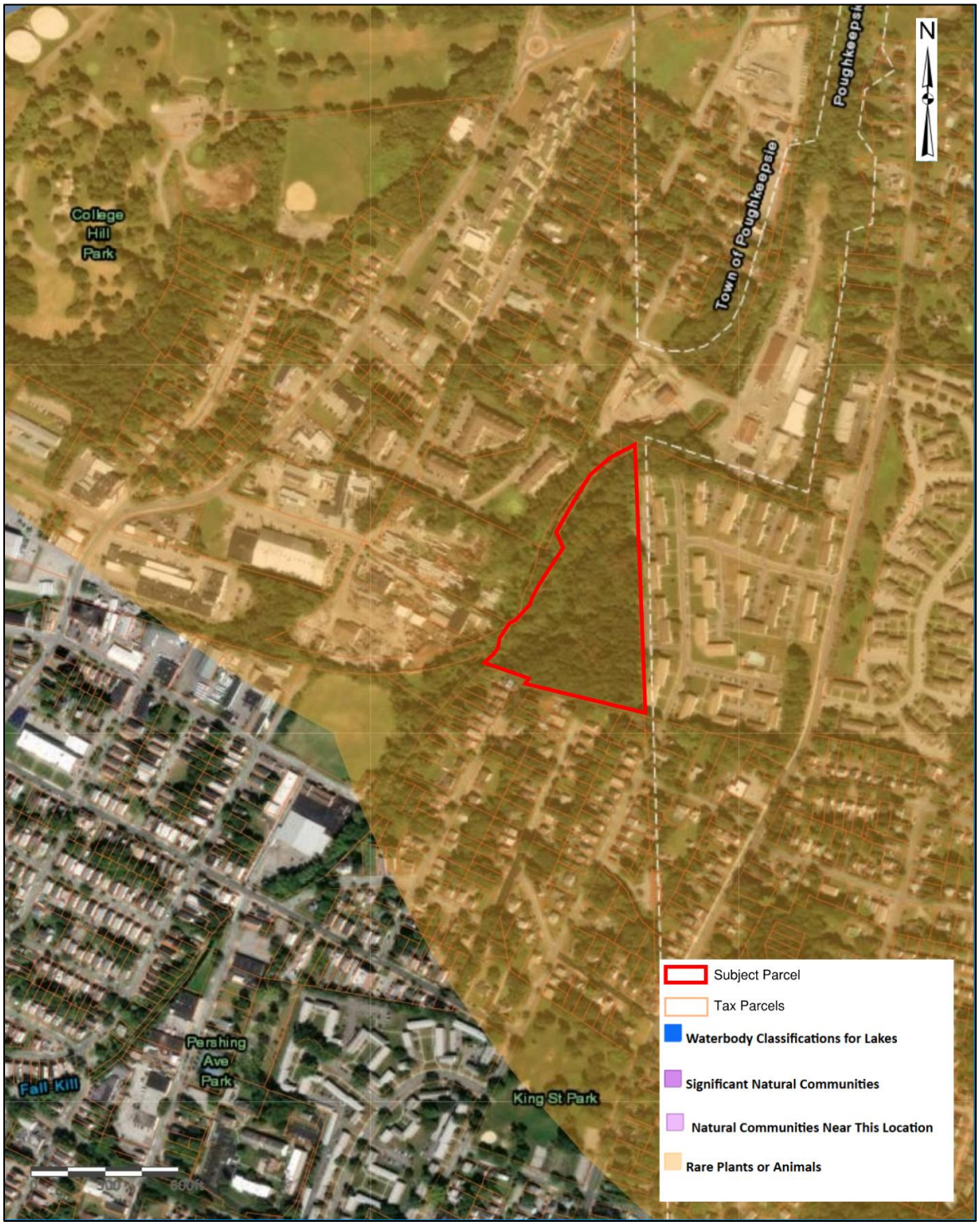

Page left intentionally blank

Figure 5

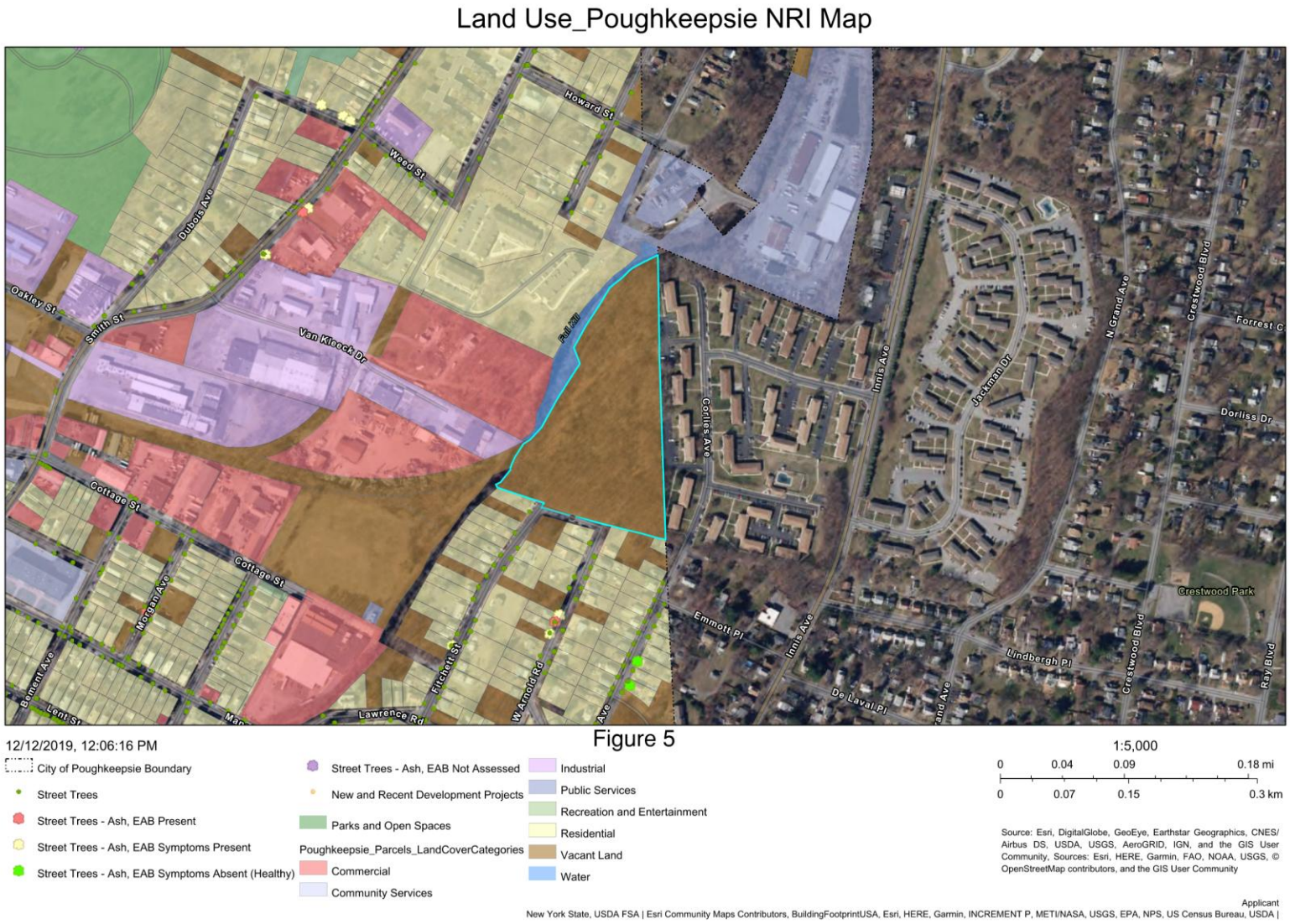
Land Use_Poughkeepsie NRI Map
Howard St
Weed St
Dubois Ave
Oakley St
Smith St
Van Kleeck Dr
Fall Kill
Cottage St
Morgan Ave
Belmont Ave
Lawrence Rd
Fitchett St
W Arnold Rd
Corlies Ave
Innis Ave
Jackman Dr
N Grand Ave
Crestwood Blvd
Dorliss Dr
Crestwood Park
Emmott Pl
Lindbergh Pl
De Laval Pl
Ray Blvd
Figure 5
12/12/2019, 12:06:16 PM
City of Poughkeepsie Boundary
Street Trees
Street Trees - Ash, EAB Present
Street Trees - Ash, EAB Symptoms Present
Street Trees - Ash, EAB Symptoms Absent (Healthy)
Street Trees - Ash, EAB Not Assessed
New and Recent Development Projects
Parks and Open Spaces
Poughkeepsie_Parcels_LandCoverCategories
Commercial
Community Services
Industrial
Public Services
Recreation and Entertainment
Residential
Vacant Land
Water
1:5,000
0 0.04 0.09 0.18 mi
0 0.07 0.15 0.3 km
Source: Esri, DigitalGlobe, GeoEye, Earthstar Geographics, CNES/ Airbus DS, USDA, USGS, AeroGRID, IGN, and the GIS User Community, Sources: Esri, HERE, Garmin, FAO, NOAA, USGS, © OpenStreetMap contributors, and the GIS User Community
Applicant
New York State, USDA FSA | Esri Community Maps Contributors, BuildingFootprintUSA, Esri, HERE, Garmin, INCREMENT P, METI/NASA, USGS, EPA, NPS, US Census Bureau, USDA |

Page left intentionally blank

Figure 6

NYSOPRHP Cultural Resource Information System (CRIS) Map

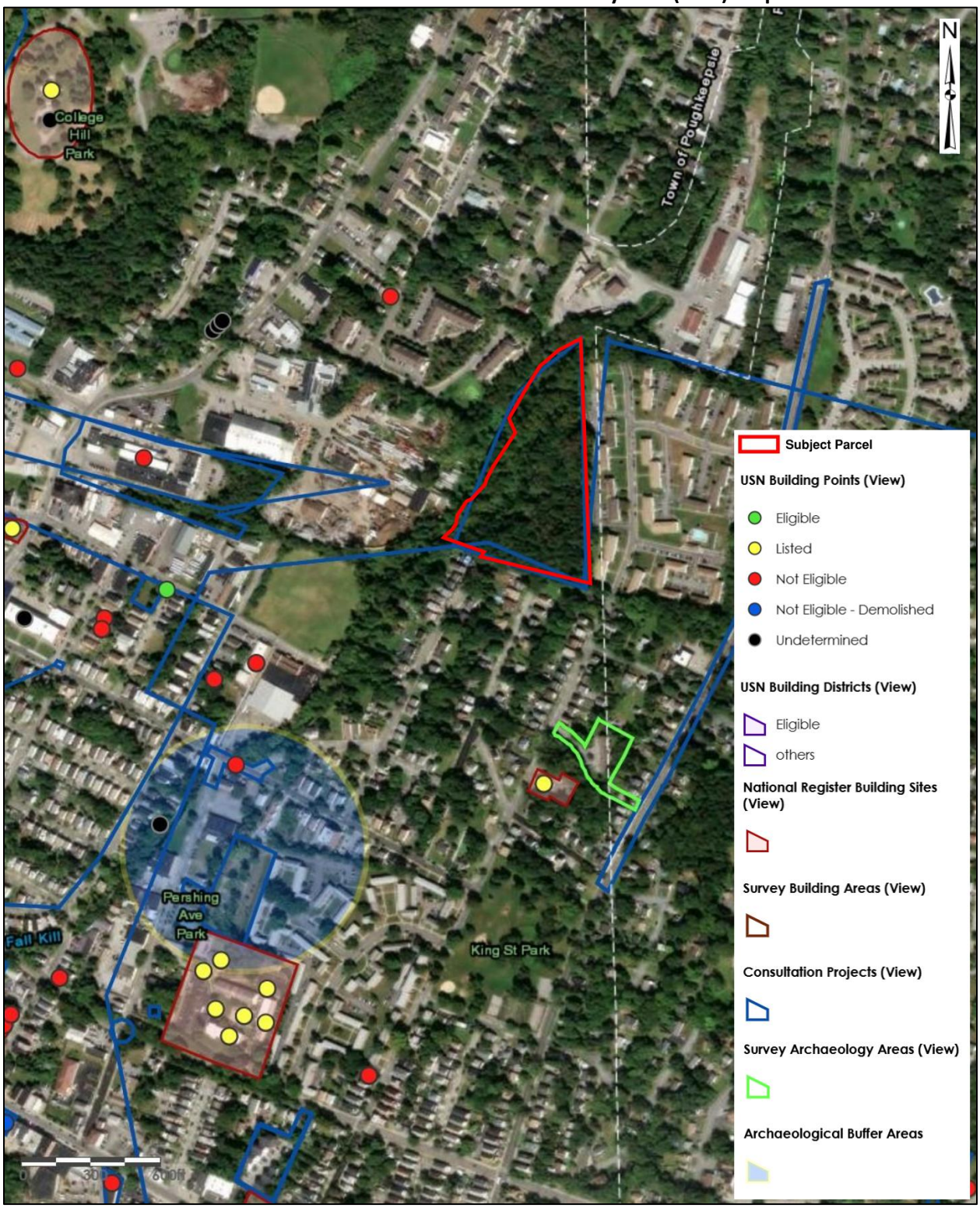

Page left intentionally blank

Figure 7

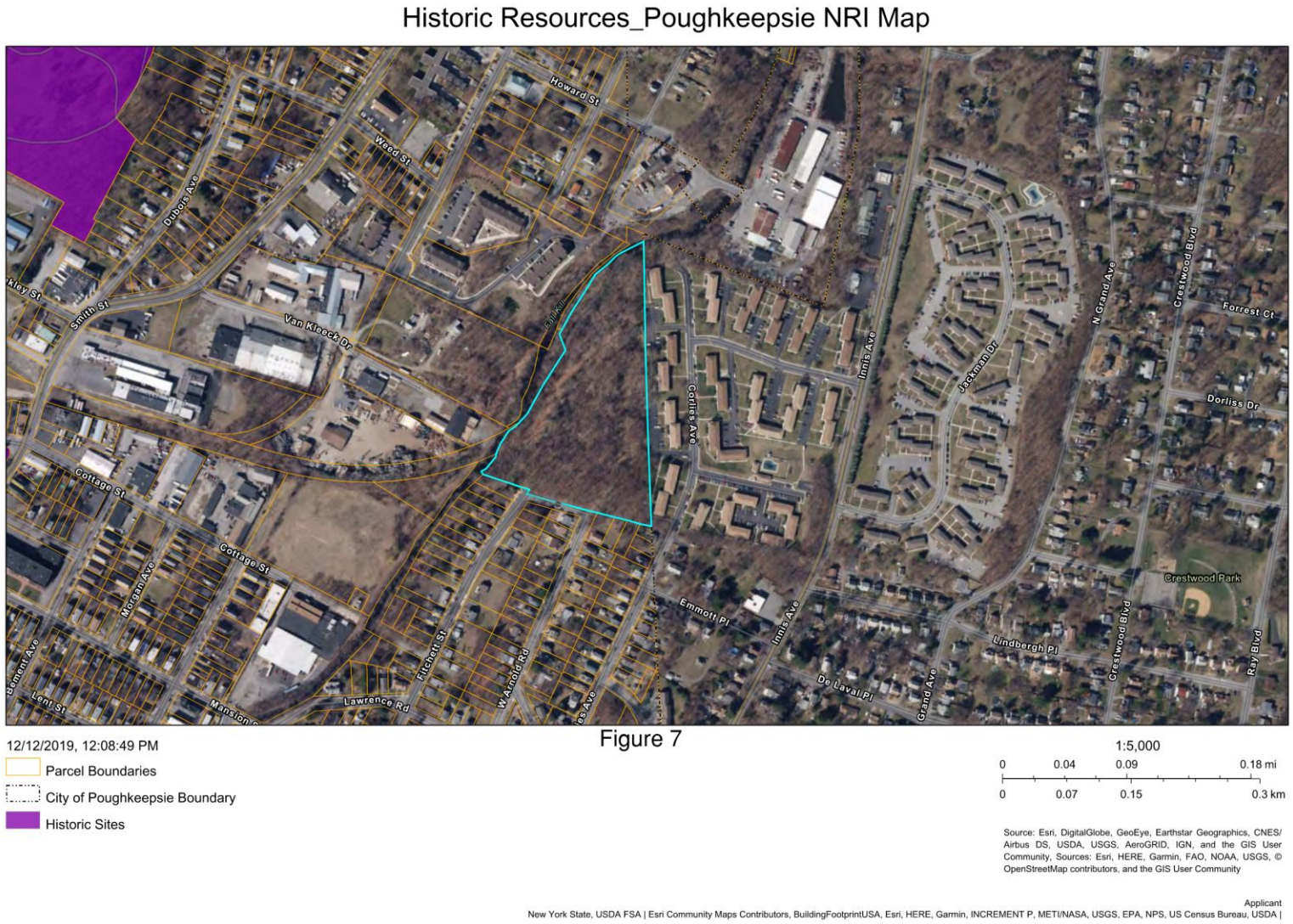
Historic Resources_Poughkeepsie NRI Map
Howard St
Weed St
Dubois Ave
Smith St
Van Kleeck Dr
Fallkill Ave
Collins Ave
Innis Ave
Jackman Dr
N Grand Ave
Crestwood Blvd
Forrest Ct
Dorliss Dr
Cottage St
Morgan Ave
Fitchett St
W Arnold Rd
Lawrence Rd
Emmott Pl
Lindbergh Pl
De Laval Pl
Grand Ave
Crestwood Park
Ray Blvd
Lent St
Figure 7
12/12/2019, 12:08:49 PM
Parcel Boundaries
City of Poughkeepsie Boundary
Historic Sites
1:5,000
0 0.04 0.09 0.18 mi
0 0.07 0.15 0.3 km
Source: Esri, DigitalGlobe, GeoEye, Earthstar Geographics, CNES/ Airbus DS, USDA, USGS, AeroGRID, IGN, and the GIS User Community, Sources: Esri, HERE, Garmin, FAO, NOAA, USGS, © OpenStreetMap contributors, and the GIS User Community
Applicant
New York State, USDA FSA | Esri Community Maps Contributors, BuildingFootprintUSA, Esri, HERE, Garmin, INCREMENT P, METI/NASA, USGS, EPA, NPS, US Census Bureau, USDA |

Figure 8

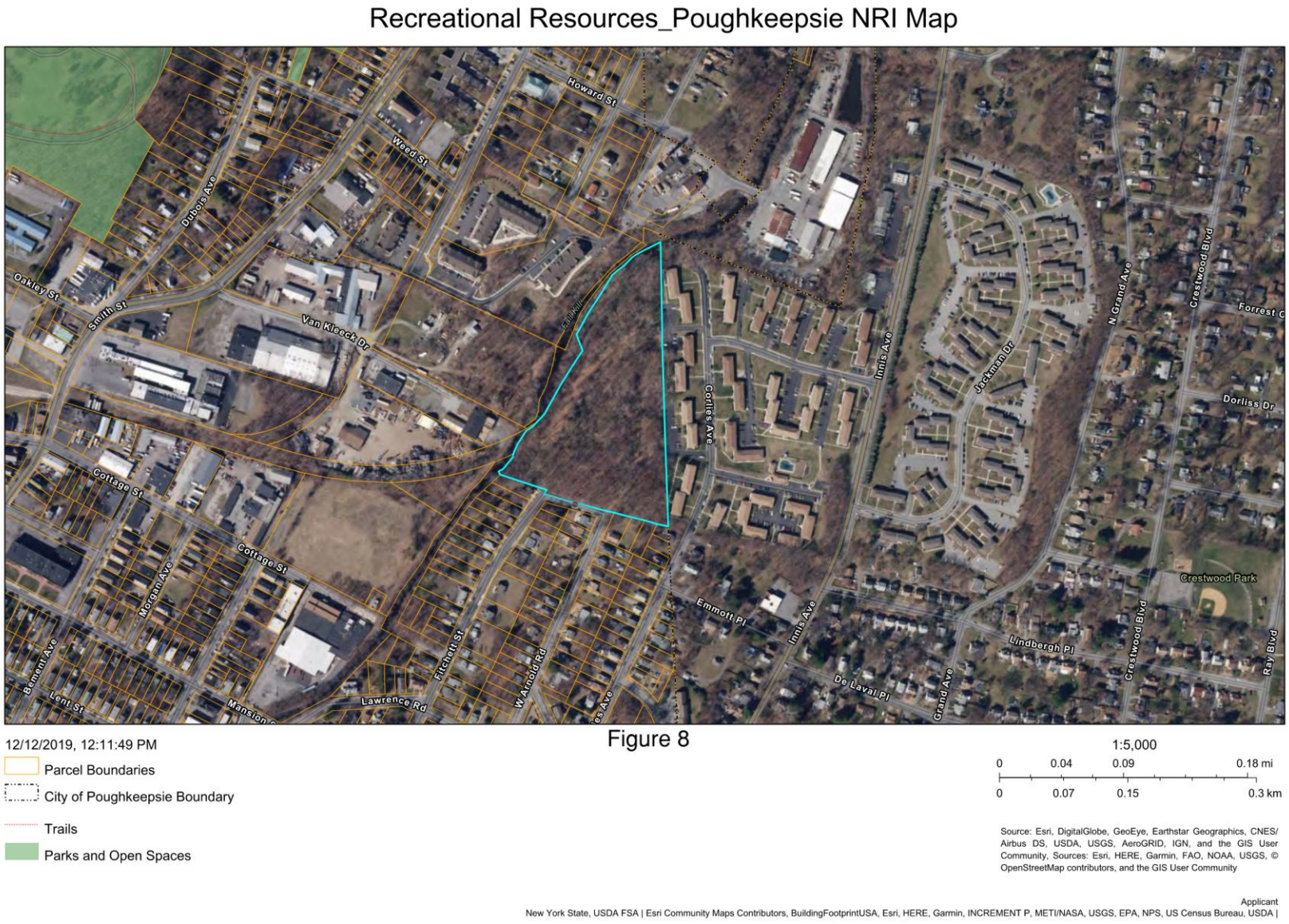

Figure 8

ATTACHMENT A
USFWS Official Species List

IPaC resource list

This report is an automatically generated list of species and other resources such as critical habitat (collectively referred to as *trust resources*) under the U.S. Fish and Wildlife Service's (USFWS) jurisdiction that are known or expected to be on or near the project area referenced below. The list may also include trust resources that occur outside of the project area, but that could potentially be directly or indirectly affected by activities in the project area. However, determining the likelihood and extent of effects a project may have on trust resources typically requires gathering additional site-specific (e.g., vegetation/species surveys) and project-specific (e.g., magnitude and timing of proposed activities) information.

Below is a summary of the project information you provided and contact information for the USFWS office(s) with jurisdiction in the defined project area. Please read the introduction to each section that follows (Endangered Species, Migratory Birds, USFWS Facilities, and NWI Wetlands) for additional information applicable to the trust resources addressed in that section.

NOT FOR CONSULTATION

Location

Dutchess County, New York



Local office

New York Ecological Services Field Office

(607) 753-9334
(607) 753-9699
fw5es_nyfo@fws.gov

3817 Luker Road
Cortland, NY 13045-9385

NOT FOR CONSULTATION

Endangered species

This resource list is for informational purposes only and does not constitute an analysis of project level impacts.

The primary information used to generate this list is the known or expected range of each species. Additional areas of influence (AOI) for species are also considered. An AOI includes areas outside of the species range if the species could be indirectly affected by activities in that area (e.g., placing a dam upstream of a fish population even if that fish does not occur at the dam site, may indirectly impact the species by reducing or eliminating water flow downstream). Because species can move, and site conditions can change, the species on this list are not guaranteed to be found on or near the project area. To fully determine any potential effects to species, additional site-specific and project-specific information is often required.

Section 7 of the Endangered Species Act **requires** Federal agencies to "request of the Secretary information whether any species which is listed or proposed to be listed may be present in the area of such proposed action" for any project that is conducted, permitted, funded, or licensed by any Federal agency. A letter from the local office and a species list which fulfills this requirement can **only** be obtained by requesting an official species list from either the Regulatory Review section in IPaC (see directions below) or from the local field office directly.

For project evaluations that require USFWS concurrence/review, please return to the IPaC website and request an official species list by doing the following:

1. Draw the project location and click CONTINUE.
2. Click DEFINE PROJECT.
3. Log in (if directed to do so).
4. Provide a name and description for your project.
5. Click REQUEST SPECIES LIST.

Listed species[1] and their critical habitats are managed by the Ecological Services Program of the U.S. Fish and Wildlife Service (USFWS) and the fisheries division of the National Oceanic and Atmospheric Administration (NOAA Fisheries[2]).

Species and critical habitats under the sole responsibility of NOAA Fisheries are **not** shown on this list. Please contact NOAA Fisheries for species under their jurisdiction.

---

1. Species listed under the Endangered Species Act are threatened or endangered; IPaC also shows species that are candidates, or proposed, for listing. See the listing status page for more information. IPaC only shows species that are regulated by USFWS (see FAQ).
2. NOAA Fisheries, also known as the National Marine Fisheries Service (NMFS), is an office of the National Oceanic and Atmospheric Administration within the Department of Commerce.

NOT FOR CONSULTATION

The following species are potentially affected by activities in this location:

Mammals

NAME	STATUS
Indiana Bat Myotis sodalis Wherever found There is **final** critical habitat for this species. Your location does not overlap the critical habitat. https://ecos.fws.gov/ecp/species/5949	Endangered
Northern Long-eared Bat Myotis septentrionalis Wherever found No critical habitat has been designated for this species. https://ecos.fws.gov/ecp/species/9045	Endangered
Tricolored Bat Perimyotis subflavus Wherever found No critical habitat has been designated for this species. https://ecos.fws.gov/ecp/species/10515	Proposed Endangered

Insects

NAME	STATUS
Monarch Butterfly Danaus plexippus Wherever found There is **proposed** critical habitat for this species. Your location does not overlap the critical habitat. https://ecos.fws.gov/ecp/species/9743	Proposed Threatened

NOT FOR CONSULTATION

Critical habitats

Potential effects to critical habitat(s) in this location must be analyzed along with the endangered species themselves.

There are no critical habitats at this location.

You are still required to determine if your project(s) may have effects on all above listed species.

Bald & Golden Eagles

Bald and Golden Eagles are protected under the Bald and Golden Eagle Protection Act [2] and the Migratory Bird Treaty Act (MBTA) [1]. Any person or organization who plans or conducts activities that may result in impacts to Bald or Golden Eagles, or their habitats, should follow appropriate regulations and consider implementing appropriate avoidance and minimization measures, as described in the various links on this page.

Additional information can be found using the following links:

- Eagle Management https://www.fws.gov/program/eagle-management
- Measures for avoiding and minimizing impacts to birds https://www.fws.gov/library/collections/avoiding-and-minimizing-incidental-take-migratory-birds
- Nationwide avoidance and minimization measures for birds https://www.fws.gov/sites/default/files/documents/nationwide-standard-conservation-measures.pdf
- Supplemental Information for Migratory Birds and Eagles in IPaC https://www.fws.gov/media/supplemental-information-migratory-birds-and-bald-and-golden-eagles-may-occur-project-action

There are Bald Eagles and/or Golden Eagles in your project area.

Measures for Proactively Minimizing Eagle Impacts
For information on how to best avoid and minimize disturbance to nesting bald eagles, please review the National Bald Eagle Management Guidelines. You may employ the timing and activity-specific distance recommendations in this document when designing your project/activity to avoid and minimize eagle impacts. For bald eagle information specific to Alaska, please refer to Bald Eagle Nesting and Sensitivity to Human Activity.

The FWS does not currently have guidelines for avoiding and minimizing disturbance to nesting Golden Eagles. For site-specific recommendations regarding nesting Golden Eagles, please consult with the appropriate Regional Migratory Bird Office or Ecological Services Field Office.

If disturbance or take of eagles cannot be avoided, an incidental take permit may be available to authorize any take that results from, but is not the purpose of, an otherwise lawful activity. For assistance making this determination for Bald Eagles, visit the Do I Need A Permit Tool. For assistance making this determination for golden eagles, please consult with the appropriate Regional Migratory Bird Office or Ecological Services Field Office.

Ensure Your Eagle List is Accurate and Complete
If your project area is in a poorly surveyed area in IPaC, your list may not be complete and you may need to rely on other resources to determine what species may be present (e.g. your local FWS field office, state surveys, your own surveys). Please review the Supplemental Information

NOT FOR CONSULTATION

on Migratory Birds and Eagles, to help you properly interpret the report for your specified location, including determining if there is sufficient data to ensure your list is accurate.

For guidance on when to schedule activities or implement avoidance and minimization measures to reduce impacts to bald or golden eagles on your list, see the "Probability of Presence Summary" below to see when these bald or golden eagles are most likely to be present and breeding in your project area.

Review the FAQs
The FAQs below provide important additional information and resources.

NAME	BREEDING SEASON
Bald Eagle Haliaeetus leucocephalus This is not a Bird of Conservation Concern (BCC) in this area, but warrants attention because of the Eagle Act or for potential susceptibilities in offshore areas from certain types of development or activities. https://ecos.fws.gov/ecp/species/1626	Breeds Dec 1 to Aug 31

Probability of Presence Summary

The graphs below provide our best understanding of when birds of concern are most likely to be present in your project area. This information can be used to tailor and schedule your project activities to avoid or minimize impacts to birds. Please make sure you read "Supplemental Information on Migratory Birds and Eagles", specifically the FAQ section titled "Proper Interpretation and Use of Your Migratory Bird Report" before using or attempting to interpret this report.

Probability of Presence (■)

Each green bar represents the bird's relative probability of presence in the 10km grid cell(s) your project overlaps during a particular week of the year. (A year is represented as 12 4-week months.) A taller bar indicates a higher probability of species presence. The survey effort (see below) can be used to establish a level of confidence in the presence score. One can have higher confidence in the presence score if the corresponding survey effort is also high.

How is the probability of presence score calculated? The calculation is done in three steps:

1. The probability of presence for each week is calculated as the number of survey events in the week where the species was detected divided by the total number of survey events for that week. For example, if in week 12 there were 20 survey events and the Spotted Towhee was found in 5 of them, the probability of presence of the Spotted Towhee in week 12 is 0.25.
2. To properly present the pattern of presence across the year, the relative probability of presence is calculated. This is the probability of presence divided by the maximum probability of presence across all weeks. For example, imagine the probability of presence in week 20 for the Spotted Towhee is 0.05, and that the probability of presence at week 12 (0.25) is the

NOT FOR CONSULTATION

maximum of any week of the year. The relative probability of presence on week 12 is 0.25/0.25 = 1; at week 20 it is 0.05/0.25 = 0.2.

3. The relative probability of presence calculated in the previous step undergoes a statistical conversion so that all possible values fall between 0 and 10, inclusive. This is the probability of presence score.

To see a bar's probability of presence score, simply hover your mouse cursor over the bar.

Breeding Season (▪)
Yellow bars denote a very liberal estimate of the time-frame inside which the bird breeds across its entire range. If there are no yellow bars shown for a bird, it does not breed in your project area.

Survey Effort (|)
Vertical black lines superimposed on probability of presence bars indicate the number of surveys performed for that species in the 10km grid cell(s) your project area overlaps. The number of surveys is expressed as a range, for example, 33 to 64 surveys.

To see a bar's survey effort range, simply hover your mouse cursor over the bar.

No Data (–)
A week is marked as having no data if there were no survey events for that week.

Survey Timeframe
Surveys from only the last 10 years are used in order to ensure delivery of currently relevant information. The exception to this is areas off the Atlantic coast, where bird returns are based on all years of available data, since data in these areas is currently much more sparse.

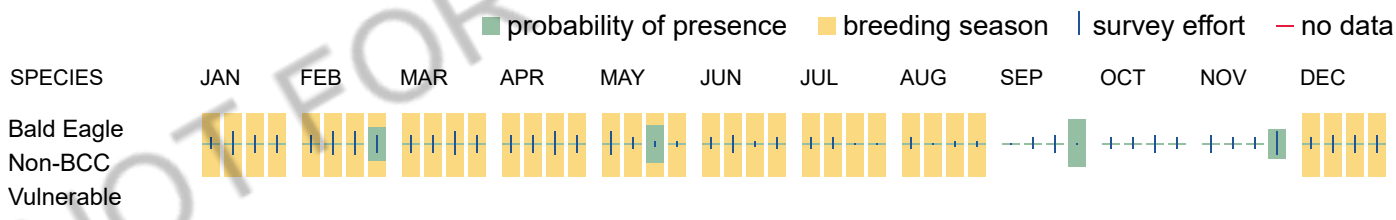

NOT FOR CONSULTATION

Bald & Golden Eagles FAQs

What does IPaC use to generate the potential presence of bald and golden eagles in my specified location?

The potential for eagle presence is derived from data provided by the Avian Knowledge Network (AKN). The AKN data is based on a growing collection of survey, banding, and citizen science datasets and is queried and filtered to return a list of those birds reported as occurring in the 10km grid cell(s) which your project intersects, and that have been identified as warranting special attention because they are an eagle (Bald and Golden Eagle Protection Act requirements may apply).

Proper interpretation and use of your eagle report
On the graphs provided, please look carefully at the survey effort (indicated by the black vertical line) and for the existence of the "no data" indicator (a red horizontal line). A high survey effort is the key component. If the survey effort is high, then the probability of presence score can be viewed as more dependable. In contrast, a low

survey effort line or no data line (red horizontal) means a lack of data and, therefore, a lack of certainty about presence of the species. This list is not perfect; it is simply a starting point for identifying what birds have the potential to be in your project area, when they might be there, and if they might be breeding (which means nests might be present). The list and associated information help you know what to look for to confirm presence and helps guide you in knowing when to implement avoidance and minimization measures to eliminate or reduce potential impacts from your project activities or get the appropriate permits should presence be confirmed.

How do I know if eagles are breeding, wintering, or migrating in my area?

To see what part of a particular bird's range your project area falls within (i.e. breeding, wintering, migrating, or resident), you may query your location using the RAIL Tool and view the range maps provided for birds in your area at the bottom of the profiles provided for each bird in your results. If an eagle on your IPaC migratory bird species list has a breeding season associated with it (indicated by yellow vertical bars on the phenology graph in your “IPaC PROBABILITY OF PRESENCE SUMMARY” at the top of your results list), there may be nests present at some point within the timeframe specified. If "Breeds elsewhere" is indicated, then the bird likely does not breed in your project area.

Interpreting the Probability of Presence Graphs

Each green bar represents the bird's relative probability of presence in the 10km grid cell(s) your project overlaps during a particular week of the year. A taller bar indicates a higher probability of species presence. The survey effort can be used to establish a level of confidence in the presence score.

How is the probability of presence score calculated? The calculation is done in three steps:
The probability of presence for each week is calculated as the number of survey events in the week where the species was detected divided by the total number of survey events for that week. For example, if in week 12 there were 20 survey events and the Spotted Towhee was found in 5 of them, the probability of presence of the Spotted Towhee in week 12 is 0.25.

To properly present the pattern of presence across the year, the relative probability of presence is calculated. This is the probability of presence divided by the maximum probability of presence across all weeks. For example, imagine the probability of presence in week 20 for the Spotted Towhee is 0.05, and that the probability of presence at week 12 (0.25) is the maximum of any week of the year. The relative probability of presence on week 12 is 0.25/0.25 = 1; at week 20 it is 0.05/0.25 = 0.2.

The relative probability of presence calculated in the previous step undergoes a statistical conversion so that all possible values fall between 0 and 10, inclusive. This is the probability of presence score.

Breeding Season ()
Yellow bars denote a very liberal estimate of the time-frame inside which the bird breeds across its entire range. If there are no yellow bars shown for a bird, it does not breed in your project area.

Survey Effort ()
Vertical black lines superimposed on probability of presence bars indicate the number of surveys performed for that species in the 10km grid cell(s) your project area overlaps.

No Data ()
A week is marked as having no data if there were no survey events for that week.

Survey Timeframe
Surveys from only the last 10 years are used in order to ensure delivery of currently relevant information. The exception to this is areas off the Atlantic coast, where bird returns are based on all years of available data, since data in these areas is currently much more sparse.

NOT FOR CONSULTATION

Migratory birds

The Migratory Bird Treaty Act (MBTA) [1] prohibits the take (including killing, capturing, selling, trading, and transport) of protected migratory bird species without prior authorization by the Department of Interior U.S. Fish and Wildlife Service (Service).

1. The Migratory Birds Treaty Act of 1918.
2. The Bald and Golden Eagle Protection Act of 1940.

Additional information can be found using the following links:

- Eagle Management https://www.fws.gov/program/eagle-management
- Measures for avoiding and minimizing impacts to birds https://www.fws.gov/library/collections/avoiding-and-minimizing-incidental-take-migratory-birds
- Nationwide avoidance and minimization measures for birds
- Supplemental Information for Migratory Birds and Eagles in IPaC https://www.fws.gov/media/supplemental-information-migratory-birds-and-bald-and-golden-eagles-may-occur-project-action

Measures for Proactively Minimizing Migratory Bird Impacts

Your IPaC Migratory Bird list showcases birds of concern, including Birds of Conservation Concern (BCC), in your project location. This is not a comprehensive list of all birds found in your project area. However, you can help proactively minimize significant impacts to all birds at your project location by implementing the measures in the Nationwide avoidance and minimization measures for birds document, and any other project-specific avoidance and minimization measures suggested at the link Measures for avoiding and minimizing impacts to birds for the birds of concern on your list below.

Ensure Your Migratory Bird List is Accurate and Complete

If your project area is in a poorly surveyed area, your list may not be complete and you may need to rely on other resources to determine what species may be present (e.g. your local FWS field office, state surveys, your own surveys). Please review the Supplemental Information on Migratory Birds and Eagles document, to help you properly interpret the report for your specified location, including determining if there is sufficient data to ensure your list is accurate.

For guidance on when to schedule activities or implement avoidance and minimization measures to reduce impacts to migratory birds on your list, see the "Probability of Presence Summary" below to see when these birds are most likely to be present and breeding in your project area.

Review the FAQs

The FAQs below provide important additional information and resources.

NAME	BREEDING SEASON

NOT FOR CONSULTATION

Bald Eagle Haliaeetus leucocephalus This is not a Bird of Conservation Concern (BCC) in this area, but warrants attention because of the Eagle Act or for potential susceptibilities in offshore areas from certain types of development or activities. https://ecos.fws.gov/ecp/species/1626	Breeds Dec 1 to Aug 31
Belted Kingfisher Megaceryle alcyon This is a Bird of Conservation Concern (BCC) only in particular Bird Conservation Regions (BCRs) in the continental USA	Breeds Mar 15 to Jul 25
Black-billed Cuckoo Coccyzus erythropthalmus This is a Bird of Conservation Concern (BCC) throughout its range in the continental USA and Alaska. https://ecos.fws.gov/ecp/species/9399	Breeds May 15 to Oct 10
Blue-winged Warbler Vermivora cyanoptera This is a Bird of Conservation Concern (BCC) only in particular Bird Conservation Regions (BCRs) in the continental USA	Breeds May 1 to Jun 30
Bobolink Dolichonyx oryzivorus This is a Bird of Conservation Concern (BCC) throughout its range in the continental USA and Alaska.	Breeds May 20 to Jul 31
Canada Warbler Cardellina canadensis This is a Bird of Conservation Concern (BCC) throughout its range in the continental USA and Alaska.	Breeds May 20 to Aug 10
Chimney Swift Chaetura pelagica This is a Bird of Conservation Concern (BCC) throughout its range in the continental USA and Alaska.	Breeds Mar 15 to Aug 25
Eastern Meadowlark Sturnella magna This is a Bird of Conservation Concern (BCC) only in particular Bird Conservation Regions (BCRs) in the continental USA	Breeds Apr 25 to Aug 31
Evening Grosbeak Coccothraustes vespertinus This is a Bird of Conservation Concern (BCC) throughout its range in the continental USA and Alaska.	Breeds May 15 to Aug 10

NOT FOR CONSULTATION

Lesser Yellowlegs Tringa flavipes This is a Bird of Conservation Concern (BCC) throughout its range in the continental USA and Alaska. https://ecos.fws.gov/ecp/species/9679	Breeds elsewhere
Prairie Warbler Setophaga discolor This is a Bird of Conservation Concern (BCC) throughout its range in the continental USA and Alaska.	Breeds May 1 to Jul 31
Red-headed Woodpecker Melanerpes erythrocephalus This is a Bird of Conservation Concern (BCC) throughout its range in the continental USA and Alaska.	Breeds May 10 to Sep 10
Rose-breasted Grosbeak Pheucticus ludovicianus This is a Bird of Conservation Concern (BCC) only in particular Bird Conservation Regions (BCRs) in the continental USA	Breeds May 15 to Jul 31
Semipalmated Sandpiper Calidris pusilla This is a Bird of Conservation Concern (BCC) only in particular Bird Conservation Regions (BCRs) in the continental USA	Breeds elsewhere
Wood Thrush Hylocichla mustelina This is a Bird of Conservation Concern (BCC) throughout its range in the continental USA and Alaska.	Breeds May 10 to Aug 31

NOT FOR CONSULTATION

Probability of Presence Summary

The graphs below provide our best understanding of when birds of concern are most likely to be present in your project area. This information can be used to tailor and schedule your project activities to avoid or minimize impacts to birds. Please make sure you read "Supplemental Information on Migratory Birds and Eagles", specifically the FAQ section titled "Proper Interpretation and Use of Your Migratory Bird Report" before using or attempting to interpret this report.

Probability of Presence (■)

Each green bar represents the bird's relative probability of presence in the 10km grid cell(s) your project overlaps during a particular week of the year. (A year is represented as 12 4-week months.) A taller bar indicates a higher probability of species presence. The survey effort (see below) can be used to establish a level of confidence in the presence score. One can have higher confidence in the presence score if the corresponding survey effort is also high.

How is the probability of presence score calculated? The calculation is done in three steps:

1. The probability of presence for each week is calculated as the number of survey events in the week where the species was detected divided by the total number of survey events for that week. For example, if in week 12 there were 20 survey events and the Spotted Towhee was found in 5 of them, the probability of presence of the Spotted Towhee in week 12 is 0.25.
2. To properly present the pattern of presence across the year, the relative probability of presence is calculated. This is the probability of presence divided by the maximum probability of presence across all weeks. For example, imagine the probability of presence in week 20 for the Spotted Towhee is 0.05, and that the probability of presence at week 12 (0.25) is the maximum of any week of the year. The relative probability of presence on week 12 is 0.25/0.25 = 1; at week 20 it is 0.05/0.25 = 0.2.
3. The relative probability of presence calculated in the previous step undergoes a statistical conversion so that all possible values fall between 0 and 10, inclusive. This is the probability of presence score.

To see a bar's probability of presence score, simply hover your mouse cursor over the bar.

Breeding Season (▪)
Yellow bars denote a very liberal estimate of the time-frame inside which the bird breeds across its entire range. If there are no yellow bars shown for a bird, it does not breed in your project area.

Survey Effort (|)
Vertical black lines superimposed on probability of presence bars indicate the number of surveys performed for that species in the 10km grid cell(s) your project area overlaps. The number of surveys is expressed as a range, for example, 33 to 64 surveys.

To see a bar's survey effort range, simply hover your mouse cursor over the bar.

No Data (–)
A week is marked as having no data if there were no survey events for that week.

Survey Timeframe
Surveys from only the last 10 years are used in order to ensure delivery of currently relevant information. The exception to this is areas off the Atlantic coast, where bird returns are based on all years of available data, since data in these areas is currently much more sparse.

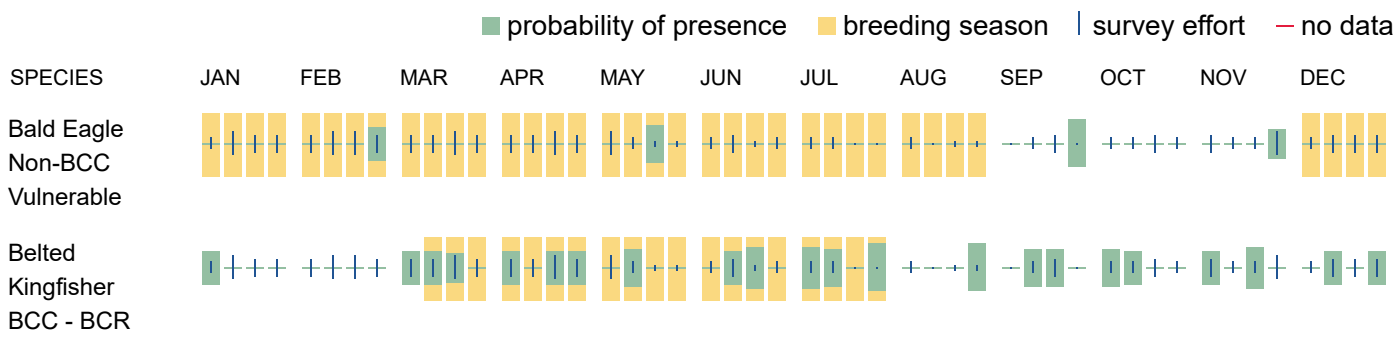

NOT FOR CONSULTATION

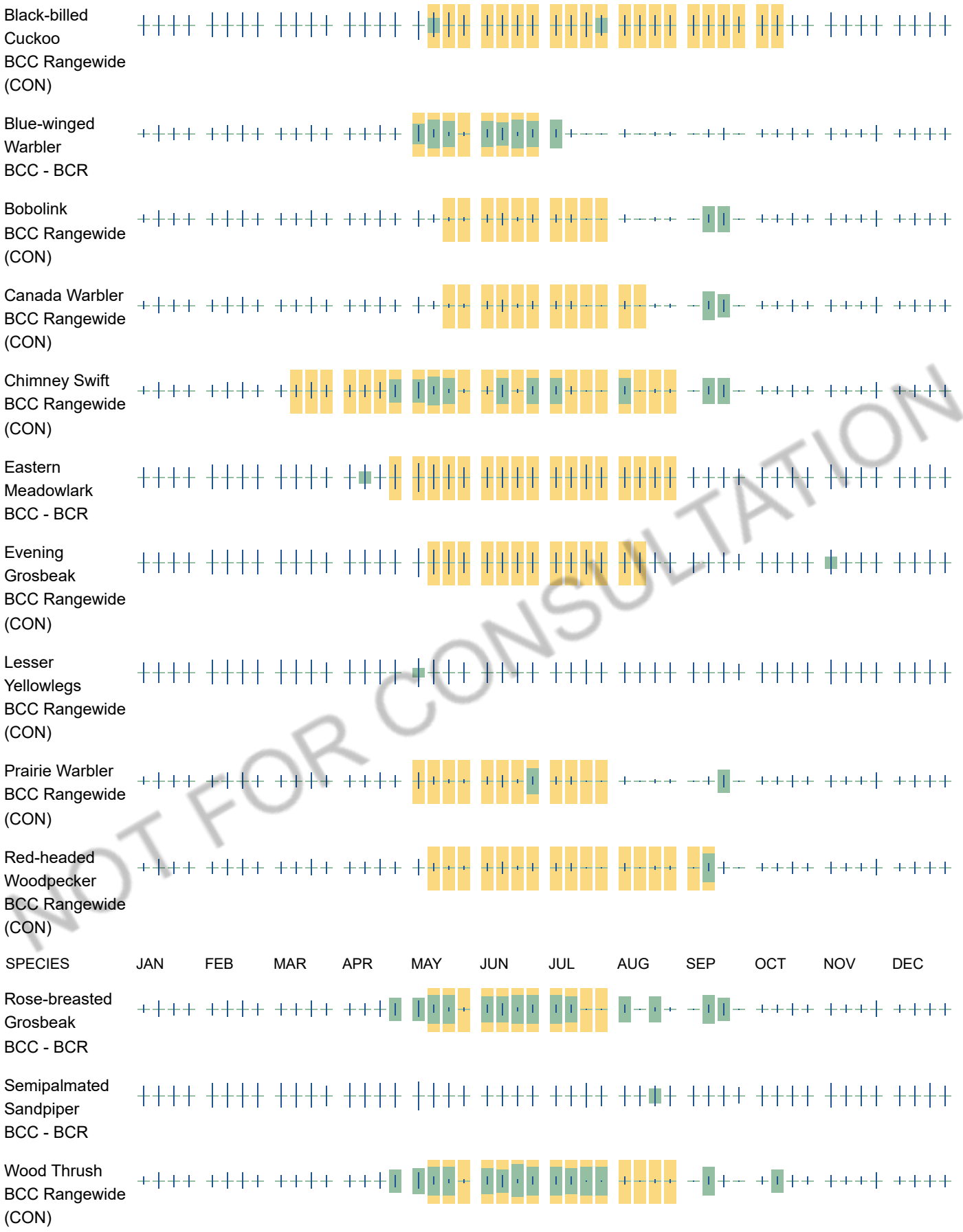

NOT FOR CONSULTATION

Migratory Bird FAQs

Tell me more about avoidance and minimization measures I can implement to avoid or minimize impacts to migratory birds.

Nationwide Avoidance & Minimization Measures for Birds describes measures that can help avoid and minimize impacts to all birds at any location year-round. When birds may be breeding in the area, identifying the locations of any active nests and avoiding their destruction is one of the most effective ways to minimize impacts. To see when birds are most likely to occur and breed in your project area, view the Probability of Presence Summary. Additional measures or permits may be advisable depending on the type of activity you are conducting and the type of infrastructure or bird species present on your project site.

What does IPaC use to generate the list of migratory birds that potentially occur in my specified location?

The Migratory Bird Resource List is comprised of Birds of Conservation Concern (BCC) and other species that may warrant special attention in your project location, such as those listed under the Endangered Species Act or the Bald and Golden Eagle Protection Act and those species marked as “Vulnerable”. See the FAQ “What are the levels of concern for migratory birds?” for more information on the levels of concern covered in the IPaC migratory bird species list.

The migratory bird list generated for your project is derived from data provided by the Avian Knowledge Network (AKN). The AKN data is based on a growing collection of survey, banding, and citizen science datasets and is queried and filtered to return a list of those birds reported as occurring in the 10km grid cell(s) with which your project intersects. These species have been identified as warranting special attention because they are BCC species in that area, an eagle (Bald and Golden Eagle Protection Act requirements may apply), or a species that has a particular vulnerability to offshore activities or development.

Again, the Migratory Bird Resource list includes only a subset of birds that may occur in your project area. It is not representative of all birds that may occur in your project area. To get a list of all birds potentially present in your project area, and to verify survey effort when no results present, please visit the Rapid Avian Information Locator (RAIL) Tool.

Why are subspecies showing up on my list?

Subspecies profiles are included on the list of species present in your project area because observations in the AKN for **the species** are being detected. If the species are present, that means that the subspecies may also be present. If a subspecies shows up on your list, you may need to rely on other resources to determine if that subspecies may be present (e.g. your local FWS field office, state surveys, your own surveys).

What does IPaC use to generate the probability of presence graphs for the migratory birds potentially occurring in my specified location?

The probability of presence graphs associated with your migratory bird list are based on data provided by the Avian Knowledge Network (AKN). This data is derived from a growing collection of survey, banding, and citizen science datasets.

Probability of presence data is continuously being updated as new and better information becomes available. To learn more about how the probability of presence graphs are produced and how to interpret them, go to the Probability of Presence Summary and then click on the "Tell me about these graphs" link.

How do I know if a bird is breeding, wintering, or migrating in my area?

NOT FOR CONSULTATION

To see what part of a particular bird's range your project area falls within (i.e. breeding, wintering, migrating, or resident), you may query your location using the RAIL Tool and view the range maps provided for birds in your area at the bottom of the profiles provided for each bird in your results. If a bird on your IPaC migratory bird species list has a breeding season associated with it (indicated by yellow vertical bars on the phenology graph in your “IPaC PROBABILITY OF PRESENCE SUMMARY” at the top of your results list), there may be nests present at some point within the timeframe specified. If "Breeds elsewhere" is indicated, then the bird likely does not breed in your project area.

What are the levels of concern for migratory birds?

Migratory birds delivered through IPaC fall into the following distinct categories of concern:

1. "BCC Rangewide" birds are Birds of Conservation Concern (BCC) that are of concern throughout their range anywhere within the USA (including Hawaii, the Pacific Islands, Puerto Rico, and the Virgin Islands);
2. "BCC - BCR" birds are BCCs that are of concern only in particular Bird Conservation Regions (BCRs) in the continental USA; and
3. "Non-BCC - Vulnerable" birds are not BCC species in your project area, but appear on your list either because of the Bald and Golden Eagle Protection Act requirements (for eagles) or (for non-eagles) potential susceptibilities in offshore areas from certain types of development or activities (e.g. offshore energy development or longline fishing).

Although it is important to avoid and minimize impacts to all birds, efforts should be made, in particular, to avoid and minimize impacts to the birds on this list, especially BCC species. For more information on avoidance and minimization measures you can implement to help avoid and minimize migratory bird impacts, please see the FAQ “Tell me more about avoidance and minimization measures I can implement to avoid or minimize impacts to migratory birds”.

Details about birds that are potentially affected by offshore projects

For additional details about the relative occurrence and abundance of both individual bird species and groups of bird species within your project area off the Atlantic Coast, please visit the Northeast Ocean Data Portal. The Portal also offers data and information about other taxa besides birds that may be helpful to you in your project review. Alternately, you may download the bird model results files underlying the portal maps through the NOAA NCCOS Integrative Statistical Modeling and Predictive Mapping of Marine Bird Distributions and Abundance on the Atlantic Outer Continental Shelf project webpage.

Proper interpretation and use of your migratory bird report

The migratory bird list generated is not a list of all birds in your project area, only a subset of birds of priority concern. To learn more about how your list is generated and see options for identifying what other birds may be in your project area, please see the FAQ "What does IPaC use to generate the migratory birds potentially occurring in my specified location". Please be aware this report provides the "probability of presence" of birds within the 10 km grid cell(s) that overlap your project; not your exact project footprint. On the graphs provided, please look carefully at the survey effort (indicated by the black vertical line) and for the existence of the "no data" indicator (a red horizontal line). A high survey effort is the key component. If the survey effort is high, then the probability of presence score can be viewed as more dependable. In contrast, a low survey effort bar or no data bar means a lack of data and, therefore, a lack of certainty about presence of the species. This list does not represent all birds present in your project area. It is simply a starting point for identifying what birds of concern have the potential to be in your project area, when they might be there, and if they might be breeding (which means nests might be present). The list and associated information help you know what to look for to confirm presence and helps guide implementation of avoidance and minimization measures to eliminate or reduce

NOT FOR CONSULTATION

potential impacts from your project activities, should presence be confirmed. To learn more about avoidance and minimization measures, visit the FAQ "Tell me about avoidance and minimization measures I can implement to avoid or minimize impacts to migratory birds".

Interpreting the Probability of Presence Graphs
Each green bar represents the bird's relative probability of presence in the 10km grid cell(s) your project overlaps during a particular week of the year. A taller bar indicates a higher probability of species presence. The survey effort can be used to establish a level of confidence in the presence score.

How is the probability of presence score calculated? The calculation is done in three steps:
The probability of presence for each week is calculated as the number of survey events in the week where the species was detected divided by the total number of survey events for that week. For example, if in week 12 there were 20 survey events and the Spotted Towhee was found in 5 of them, the probability of presence of the Spotted Towhee in week 12 is 0.25.

To properly present the pattern of presence across the year, the relative probability of presence is calculated. This is the probability of presence divided by the maximum probability of presence across all weeks. For example, imagine the probability of presence in week 20 for the Spotted Towhee is 0.05, and that the probability of presence at week 12 (0.25) is the maximum of any week of the year. The relative probability of presence on week 12 is 0.25/0.25 = 1; at week 20 it is 0.05/0.25 = 0.2.

The relative probability of presence calculated in the previous step undergoes a statistical conversion so that all possible values fall between 0 and 10, inclusive. This is the probability of presence score.

Breeding Season ()
Yellow bars denote a very liberal estimate of the time-frame inside which the bird breeds across its entire range. If there are no yellow bars shown for a bird, it does not breed in your project area.

Survey Effort ()
Vertical black lines superimposed on probability of presence bars indicate the number of surveys performed for that species in the 10km grid cell(s) your project area overlaps.

No Data ()
A week is marked as having no data if there were no survey events for that week.

Survey Timeframe
Surveys from only the last 10 years are used in order to ensure delivery of currently relevant information. The exception to this is areas off the Atlantic coast, where bird returns are based on all years of available data, since data in these areas is currently much more sparse.

NOT FOR CONSULTATION

Facilities

National Wildlife Refuge lands

Any activity proposed on lands managed by the National Wildlife Refuge system must undergo a 'Compatibility Determination' conducted by the Refuge. Please contact the individual Refuges to discuss any questions or concerns.

There are no refuge lands at this location.

Fish hatcheries

There are no fish hatcheries at this location.

Wetlands in the National Wetlands Inventory (NWI)

Impacts to NWI wetlands and other aquatic habitats may be subject to regulation under Section 404 of the Clean Water Act, or other State/Federal statutes.

For more information please contact the Regulatory Program of the local U.S. Army Corps of Engineers District.

Please note that the NWI data being shown may be out of date. We are currently working to update our NWI data set. We recommend you verify these results with a site visit to determine the actual extent of wetlands on site.

This location overlaps the following wetlands:

FRESHWATER FORESTED/SHRUB WETLAND
PFO1E

RIVERINE
R3UBH

A full description for each wetland code can be found at the National Wetlands Inventory website

NOTE: This initial screening does **not** replace an on-site delineation to determine whether wetlands occur. Additional information on the NWI data is provided below.

Data limitations

The Service's objective of mapping wetlands and deepwater habitats is to produce reconnaissance level information on the location, type and size of these resources. The maps are prepared from the analysis of high altitude imagery. Wetlands are identified based on vegetation, visible hydrology and geography. A margin of error is inherent in the use of imagery; thus, detailed on-the-ground inspection of any particular site may result in revision of the wetland boundaries or classification established through image analysis.

NOT FOR CONSULTATION

The accuracy of image interpretation depends on the quality of the imagery, the experience of the image analysts, the amount and quality of the collateral data and the amount of ground truth verification work conducted. Metadata should be consulted to determine the date of the source imagery used and any mapping problems.

Wetlands or other mapped features may have changed since the date of the imagery or field work. There may be occasional differences in polygon boundaries or classifications between the information depicted on the map and the actual conditions on site.

Data exclusions

Certain wetland habitats are excluded from the National mapping program because of the limitations of aerial imagery as the primary data source used to detect wetlands. These habitats include seagrasses or submerged aquatic vegetation that are found in the intertidal and subtidal zones of estuaries and nearshore coastal waters. Some deepwater reef communities (coral or tuberficid worm reefs) have also been excluded from the inventory. These habitats, because of their depth, go undetected by aerial imagery.

Data precautions

Federal, state, and local regulatory agencies with jurisdiction over wetlands may define and describe wetlands in a different manner than that used in this inventory. There is no attempt, in either the design or products of this inventory, to define the limits of proprietary jurisdiction of any Federal, state, or local government or to establish the geographical scope of the regulatory programs of government agencies. Persons intending to engage in activities involving modifications within or adjacent to wetland areas should seek the advice of appropriate Federal, state, or local agencies concerning specified agency regulatory programs and proprietary jurisdictions that may affect such activities.

NOT FOR CONSULTATION

THE CITY OF POUGHKEEPSIE
NEW YORK
DEVELOPMENT DEPARTMENT
62 CIVIC CENTER PLAZA, 2ND FLOOR
POUGHKEEPSIE, NY 12601
Phone: (845) 451-4047
Email: emcgovern@cityofpoughkeepsie.com

Europa McGovern
Commissioner

MEMORANDUM

DATE: November 14, 2025

TO: City of Poughkeepsie Corporation Counsel and Members of the Common Council

RE: **Milton Street Application for Rezoning**

The Development Department is in receipt of an application for the rezoning of the vacant 9-acre parcel on Milton Street (Tax Map Parcel #6162-73-623227) from an RNA District to an RND District. The application is enclosed with the communication to the Common Council for consideration. Included with the application are plans detailing development of the parcel for 63 dwelling units (31 one-bedroom units and 32 two-bedroom units) in two 3-story buildings with off-street parking, a swimming pool and pool house. As single family dwellings are the only residential use permitted in RNA Districts, the applicant seeks rezoning to a zoning district which would permit the use proposed.

To put this application in context, here is a summary of the most recent history of the property:

- December 5, 2019: the owner filed an application for rezoning of the parcel from R-2 to PRD, which was referred to the Planning Board for recommendation;
- September 29, 2020: the Planning Board recommended that rezoning to the Common Council;
- January 20, 2021: the Planning Board issued a negative declaration for SEQRA purposes;
- February16, 2021: the Common Council rezoned the parcel to PRD. As the underlying zoning was R-2, the number of units allowed was limited to the lot area requirements of that district (392,040 sf divided by 6,000 sf per unit = 65 units);
- May 25, 2021: the owner filed an application for site plan review for the project under the PRD regulations: zoning deficiencies were identified;
- June 6, 202: the owner filed an application for area variances with the ZBA;
- September 14, 2021: the ZBA granted three area variances for the project (access to an arterial street, buffer strips, location of accessory uses);
- The application was on numerous Planning Board agendas, last appearing in October 2021.
- February 22, 2022: the Common Council extended the rezoning for six months at the owner's request: no further extensions were granted;
- September 6, 2024: a Municipal Consent to Form a Sewage-Works Corporation was approved by the Common Council and the Mayor:
- November 4, 2024: the property was rezoned to RNA as part of the Common Council's adoption of the City of Poughkeepsie Zoning Ordinance, along with entire neighborhood of primarily single-family dwellings to the north (which provides the only access to the property).

THE CITY OF POUGHKEEPSIE
NEW YORK
DEVELOPMENT DEPARTMENT
62 CIVIC CENTER PLAZA, 2ND FLOOR
POUGHKEEPSIE, NY 12601
Phone: (845) 451-4047
Email: emcgovern@cityofpoughkeepsie.com

Europa McGovern
Commissioner

Please additionally note that the parcel is located directly on the Fallkill Creek and is in Zone A of the 100-year floodplain. Section 19-6.6(6) of the Zoning Code provides that not more than 10% of the minimum area requirement of a lot may be fulfilled by land which is under water or subject to periodic flooding, which essentially means that the developable lot area is 6.17 acres as opposed to 9 acres.

The Development Department stands ready to assist the Common Council in considering this application and can provide any additional information, context, and recommendations as requested.

Europa McGovern

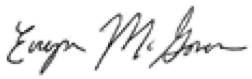

Commissioner of Development

CC: Jamar Cummings, City Chamberlain

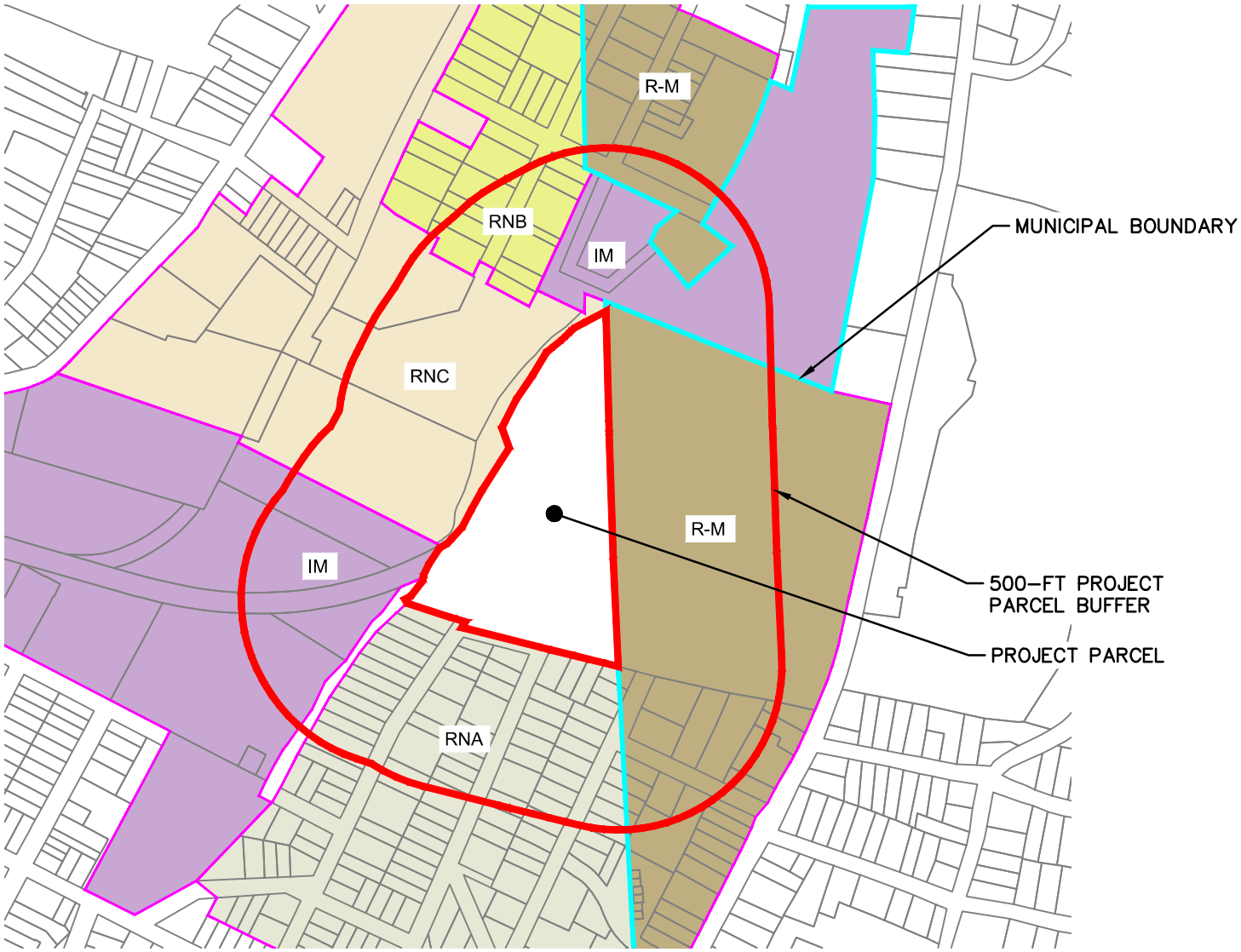

SCALE: 1"=500'

LaBella
Powered by partnership.
21 Fox Street
Poughkeepsie, NY 12601
(845) 454-3980
labellapc.com
© 2022 LaBella Associates

It is a violation of New York Education Law Article 145 Sec.7209, for any person, unless acting under the direction of a licensed architect, professional engineer, or land surveyor, to alter an item in any way. If an item bearing the seal of an architect, engineer, or land surveyor is altered; the altering architect, engineer, or land surveyor shall affix to the item their seal and notation "altered by" followed by their signature and date of such alteration, and a specific description of the alteration.

ISSUED FOR: FIGURE - NOT FOR CONSTRUCTION

DRAWING NAME: **500-FT BUFFER ZONING MAP**

DRAWN BY:	DATE:	PROJECT NO.:
JRR	10/28/2025	CZ81947.00

PROJECT NAME: **HIGHVIEW AT THE FALLKILL CREEK**
MILTON STREET, CITY OF POUGHKEEPSIE, DUTCHESS COUNTY, NY

DRAWING NUMBER: **FIGURE-1**

10/28/2025 11:51:36 AM B:\GLOBAL\Legacy\Chazen\Projects\81900-81999\81947.00 - Highview II\DWG\10_zoning map.dwg

RESOLUTION

(R-25-84)

SPONSORED BY CHAIRMAN WILSON; COUNCILMEMBERS PATTTERSON THOMPSON, MENIST, JAMES AND GRANT

WHEREAS, Maselo Realty, LLC has made application to the City of Poughkeepsie to rezone certain property for a nine (9) acre vacant parcel of land on Milton Street from RNA to RND; and

WHEREAS, the Common Council of the City of Poughkeepsie, by Ordinance O-21-01 on February 16, 2021, previously rezoned the nine (9) acre vacant parcel of land located on Milton Street known on the tax maps as Grid No. 6162-73-623227 from R-2 (Medium Low Density Residential District) to Planned Residential Development (PRD); and

WHEREAS, pursuant to City of Poughkeepsie City Code Section 19-4.1(6)(a)[1], a rezoning to PRD is effective for twelve months and the Common Council is authorized to grant extensions to the approval up to a maximum of 3 years and 6 months; and

WHEREAS, all extensions of the previous approval have been exhausted; and

WHEREAS, the applicant seeks a rezoning to RND for the same exact development plan; and it was determined by staff in the Development Department that a rezoning to RND would require fewer area variances from the Zoning Board of Appeals.

WHEREAS, the application will require review under the State Environmental Quality Review Act (SEQRA) and site plan approval from the Planning Board.

NOW, THEREFORE, BE IT RESOLVED, that the Common Council hereby refers this application to the Planning Board for purposes of undertaking the appropriate review under SEQRA.

SECONDED BY COUNCILMEMBER BROWN

Submitted to Council: **December 8, 2025** Council Action: **Approved** Roll call vote taken: Yes X No_____ Ayes 7 Nays 0 Abstain 0 Absent 2 Approved by Mayor on 12/11/25 Mayor's Signature_____	I hereby certify the foregoing to be a true and correct copy of a Resolution duly adopted at a regular meeting of the Common Council held **December 8, 2025** Tamara M Cummings City Chamberlain

[1] Previously Code Section 19-3.18(6)(a) prior to November 2024.

THE CITY OF POUGHKEEPSIE
NEW YORK
DEVELOPMENT DEPARTMENT
62 CIVIC CENTER PLAZA, 2ND FLOOR
POUGHKEEPSIE, NY 12601
Phone: (845) 451-4047
Email: emcgovern@cityofpoughkeepsie.com

Europa McGovern
Commissioner

MEMORANDUM

DATE: November 14, 2025

TO: City of Poughkeepsie Corporation Counsel and Members of the Common Council

RE: **Milton Street Application for Rezoning**

The Development Department is in receipt of an application for the rezoning of the vacant 9-acre parcel on Milton Street (Tax Map Parcel #6162-73-623227) from an RNA District to an RND District. The application is enclosed with the communication to the Common Council for consideration. Included with the application are plans detailing development of the parcel for 63 dwelling units (31 one-bedroom units and 32 two-bedroom units) in two 3-story buildings with off-street parking, a swimming pool and pool house. As single family dwellings are the only residential use permitted in RNA Districts, the applicant seeks rezoning to a zoning district which would permit the use proposed.

To put this application in context, here is a summary of the most recent history of the property:

- December 5, 2019: the owner filed an application for rezoning of the parcel from R-2 to PRD, which was referred to the Planning Board for recommendation;
- September 29, 2020: the Planning Board recommended that rezoning to the Common Council;
- January 20, 2021: the Planning Board issued a negative declaration for SEQRA purposes;
- February16, 2021: the Common Council rezoned the parcel to PRD. As the underlying zoning was R-2, the number of units allowed was limited to the lot area requirements of that district (392,040 sf divided by 6,000 sf per unit = 65 units);
- May 25, 2021: the owner filed an application for site plan review for the project under the PRD regulations: zoning deficiencies were identified;
- June 6, 202: the owner filed an application for area variances with the ZBA;
- September 14, 2021: the ZBA granted three area variances for the project (access to an arterial street, buffer strips, location of accessory uses);
- The application was on numerous Planning Board agendas, last appearing in October 2021.
- February 22, 2022: the Common Council extended the rezoning for six months at the owner's request: no further extensions were granted;
- September 6, 2024: a Municipal Consent to Form a Sewage-Works Corporation was approved by the Common Council and the Mayor:
- November 4, 2024: the property was rezoned to RNA as part of the Common Council's adoption of the City of Poughkeepsie Zoning Ordinance, along with entire neighborhood of primarily single-family dwellings to the north (which provides the only access to the property).

THE CITY OF POUGHKEEPSIE
NEW YORK
DEVELOPMENT DEPARTMENT
62 CIVIC CENTER PLAZA, 2ND FLOOR
POUGHKEEPSIE, NY 12601
Phone: (845) 451-4047
Email: emcgovern@cityofpoughkeepsie.com

Europa McGovern
Commissioner

Please additionally note that the parcel is located directly on the Fallkill Creek and is in Zone A of the 100-year floodplain. Section 19-6.6(6) of the Zoning Code provides that not more than 10% of the minimum area requirement of a lot may be fulfilled by land which is under water or subject to periodic flooding, which essentially means that the developable lot area is 6.17 acres as opposed to 9 acres.

The Development Department stands ready to assist the Common Council in considering this application and can provide any additional information, context, and recommendations as requested.

Europa McGovern

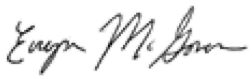

Commissioner of Development

CC: Jamar Cummings, City Chamberlain

CITY OF POUGHKEEPSIE
NEW YORK
PLANNING DEPARTMENT
VIC CENTER PLAZA, 2ND FLOOR
POUGHKEEPSIE, NY 12601
Phone: (845) 451-4010 Fax: (845) 451-4006

OFFICE USE ONLY
CODE: _____
ID #_____
FEES: $1,000,00

APPLICATION FOR REZONING

PROJECT ADDRESS(ES): Milton Street, City of Poughkeepsie, Dutchess County, New York

GRID #(s): 131300-6162-73-623227

(ADD ADDITIONAL SHEETS IF NECESSARY)

APPLICANT: Maselo Realty, LLC (Simon Abikhzer)
Street: 18 Eastview Road
Town/Zip: Monsey, NY 10952

Phone: 845-341-7395
Email: simonabikzer@gmail.com

Applicant is: X Owner _____ Contract Vendee

If Applicant is a Corporation, LLC, LP, PC, D/B/A or Partnership, provide the name of the principal(s) who will be representing the rezoning application: _____
Simon Abikhzer

If applicant is a Corporation, LLC, LP, PC, D/B/A or Partnership, provide names of all shareholders, members, partners and/or officers: _____
Simon Abikhzer

Date that Corporation, LLC, LP, PC D/B/A or Partnership was formed or registered to do business in New York State: 7/26/2004

IF THE APPLICANT IS NOT THE OWNER, DOCUMENTATION AUTHORIZING THE APPLICANT TO PURSUE APPROVALS, SUCH AS AN EXECUTED CONTRACT OF SALE OR OPTION TO PURCHES, MUST BE SUBMITTED.
Not applicable - Owner is applicant.

CONSULTANT: LaBella Associates (Caren LoBrutto)
Street: 21 Fox Street
Town/Zip: Poughkeepsie, NY 12601

Phone: (845) 486-1458
Email: clobrutto@labellapc.com

HE CITY OF POUGHKEEPSIE
NEW YORK
PLANNING DEPARTMENT
62 CIVIC CENTER PLAZA
POUGHKEEPSIE, NY 12601
Phone: (845) 451-4010 Fax: (845) 451-4006

APPLICATION FOR REZONING
PROJECT INFORMATION

ADDRESS: Milton Street, City of Poughkeepsie, Dutchess County, New York

CURRENT ZONING: Residential Neighborhood A (RNA)

PROPOSED ZONING: Residential Neighborhood D (RND)

DESCRIBE THE PROJECT FOR WHICH THE REZONING IS REQUESTED:

Proposed 63-unit multifamily development (31 one-bedroom units and 32 two-bedroom units) clustered within two buildings.

Will the project require any of the following approvals after rezoning? Please check all that apply:

- [X] Site Plan from the Planning Board
- [ ] Special Permit from the Planning Board
- [ ] Subdivision (lot line adjustment
- [ ] Use variance from the Zoning Board of Appeals
- [ ] Area variance(s) from the Zoning Board of Appeals

APPLICANT'S CERTIFICATION

By his/her signature, the applicant vows that: 1) He/She has read this application and is familiar with its contents and that the information provided herein is complete and true to the best of the applicant's knowledge; 2) He/She has read, is familiar with, and understands the requirements of the City of Poughkeepsie provision(s) affecting and/or regulating the project for which this application is made; 3) He/She agrees to comply with the requirements of the City of Poughkeepsie affecting and/or regulating the project for which this application is made, including any general or special conditions of permits or approvals granted by any board, agency or department of the City of Poughkeepise; and, 4) He/She has read this statement and understands its meaning and terms.

Applicant's signature

10/24/25
Date

THE CITY OF POUGHKEEPSIE
NEW YORK
PLANNING DEPARTMENT
62 CIVIC CENTER PLAZA
POUGHKEEPSIE, NY 12601
Phone: (845) 451-4010 Fax: (845) 451-4006

APPLICATION FOR REZONING

INSTRUCTIONS FOR FILING APPLICATION FOR REZONING

Complete the attached application (type or print legibly) and return to the Planning Department with the following information/documentation:

1) One (1) hard copy of a tax map illustrating the parcel or parcels under review, as well as all parcels within 500 feet, indicating the current zoning of all those properties;
2) One (1) hard copy of a site plan indicating the proposed development of the parcel or parcels under review.
3) One (1) hard copy of a Part 1 Long Form EAF.
4) Application fee ($1000).
5) A CD, flash drive or SD Card with an electronic copy of all applications, forms, documents and maps. The digital copy shall be in a pdf, jpg, tiff or other suitable write-protected image format capable of being opened and view using any standard Windows software.

Once the application and supporting documentation has been received, the Planning Staff will review it for completeness and consistency with City planning objectives, and prepare an analysis for the Common Council, which body is charged with the authority to rezone parcels. At that time, you will be contacted relative to the number of copies required for circulation, and any other forms needed to secure a place on a Council agenda.

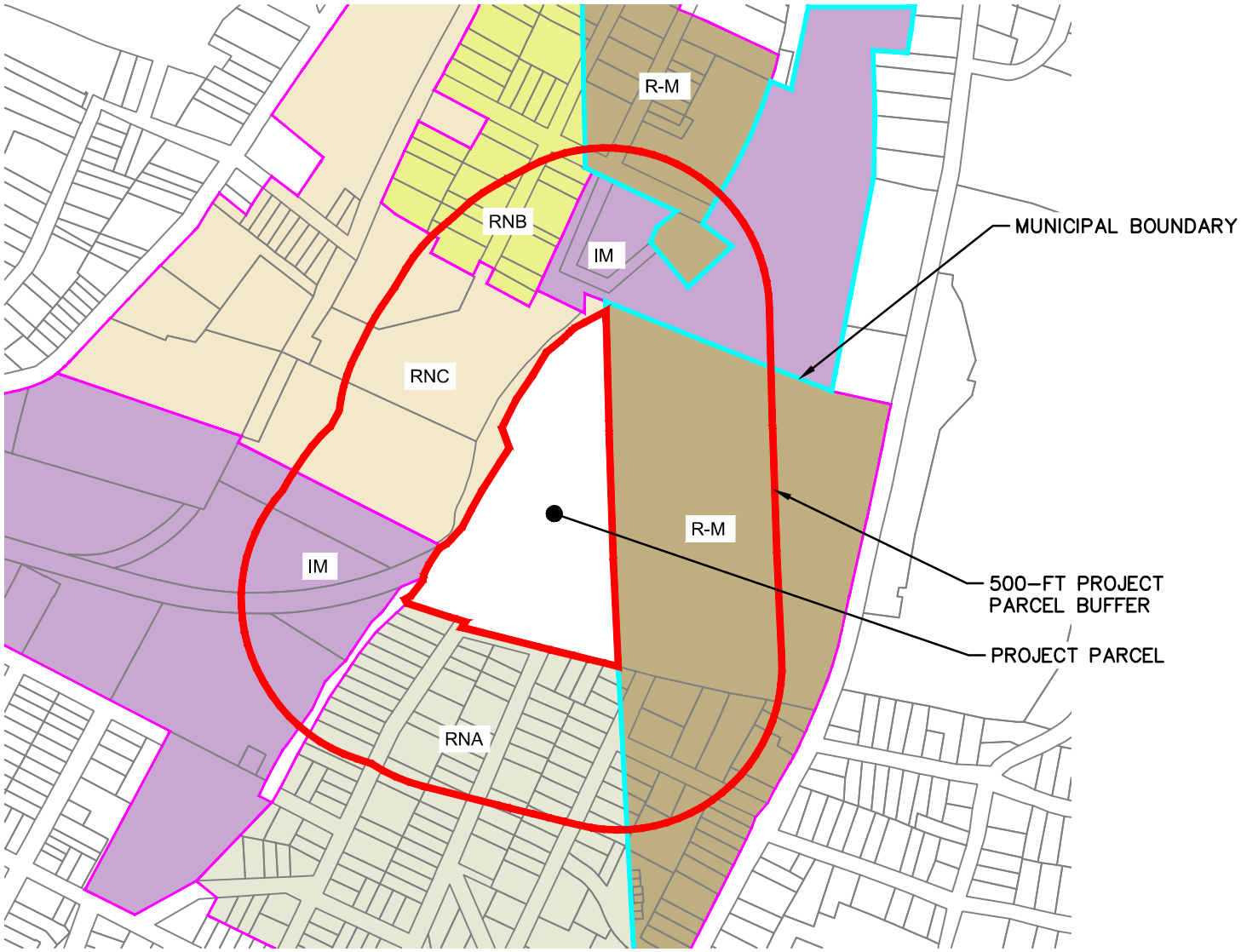

SCALE: 1"=500'

LaBella
Powered by partnership.

21 Fox Street
Poughkeepsie, NY 12601
(845) 454-3980

labellapc.com

© 2022 LaBella Associates

It is a violation of New York Education Law Article 145 Sec.7209, for any person, unless acting under the direction of a licensed architect, professional engineer, or land surveyor, to alter an item in any way. If an item bearing the seal of an architect, engineer, or land surveyor is altered; the altering architect, engineer, or land surveyor shall affix to the item their seal and notation "altered by" followed by their signature and date of such alteration, and a specific description of the alteration.

ISSUED FOR: FIGURE - NOT FOR CONSTRUCTION

DRAWING NAME: **500-FT BUFFER ZONING MAP**

DRAWN BY:	DATE:	PROJECT NO.:
JRR	10/28/2025	CZ81947.00

PROJECT NAME: **HIGHVIEW AT THE FALLKILL CREEK**
MILTON STREET, CITY OF POUGHKEEPSIE, DUTCHESS COUNTY, NY

DRAWING NUMBER: **FIGURE-1**

10/28/2025 11:51:36 AM B:\GLOBAL\Legacy\Chazen\Projects\81900-81999\81947.00 - Highview II\DWG\10_zoning map.dwg

HIGHVIEW AT THE FALLKILL CREEK

MILTON STREET, CITY OF POUGHKEEPSIE
DUTCHESS COUNTY, NEW YORK 12601

BULK DIMENSIONAL TABLE			
ZONING DISTRICT: RESIDENTIAL NEIGHBORHOOD D (RND)			
ALL REQUIREMENTS BELOW ARE FROM THE OCTOBER 2024 CITY OF POUGHKEEPSIE ZONING AND LAND USE REGULATIONS, CHAPTER 19, ARTICLE 2, SECTION 19-2.4			
	UNITS	**REQUIRED**	**PROPOSED**
2. LOTS & PARKING			
LOT AREA AND COVERAGE			
A. MINIMUM LOT AREA (5+ UNITS)	SF	8,000	379,538
B. MINIMUM LOT WIDTH	FT	30	340
C. MAXIMUM LOT COVERAGE (ALL IMPERVIOUS)	%	80%	21%
PARKING LOCATION & ACCESS			
D. MINIMUM PRIMARY STREET SET-BACK (PRIMARY STRUCTURE PRIMARY STREET SETBACK + 5-FT)	FT	5	176
E. MINIMUM SECONDARY STREET SETBACK	FT	10	N/A
F. MINIMUM SIDE YARD SETBACK	FT	10	12
G. MINIMUM REAR YARD SETBACK	FT	5	265
H. MAXIMUM DRIVEWAY WIDTH	FT	15	N/A
3. BUILDING PLACEMENT			
PRIMARY STRUCTURE SETBACKS			
A. MINIMUM PRIMARY STREET SET-BACK	FT	0	209
B. MINIMUM SECONDARY STREET SETBACK	FT	10	N/A
C. MINIMUM SIDE SETBACK	FT	0	116
D. MINIMUM REAR SETBACK	FT	15	176
ACCESSORY STRUCTURE SETBACKS			
D. MINIMUM PRIMARY STREET SET-BACK	FT	NOT PERMITTED	N/A
E. MINIMUM SECONDARY STREET SETBACK	FT	NOT PERMITTED	N/A
F. MINIMUM SIDE SETBACK	FT	5	50
G. MINIMUM REAR SETBACK	FT	5	268
4. BUILDING COMPOSITION			
HEIGHT			
A. MAXIMUM PRIMARY BUILDING HEIGHT	FT	55	35
MAXIMUM PRIMARY BUILDING HEIGHT	STORIES	4	3
MAXIMUM ACCESSORY BUILDING/STRUCTURE HEIGHT	FT	25	
ENTRANCE			
B. PRIMARY STREET FACING ENTRANCE	-	REQUIRED	PROVIDED
C. SIDEWALK FROM ENTRANCE TO PUBLIC SIDEWALK	-	REQUIRED	PROVIDED
DENSITY			
D. DWELLING UNITS	PER LOT	5+	63
ADDITIONAL REQUIREMENTS BELOW ARE FROM THE OCTOBER 2024 CITY OF POUGHKEEPSIE ZONING AND LAND USE REGULATIONS, CHAPTER 19, ARTICLES 5&6, SECTION SPECIFIED BELOW			
	UNITS	**REQUIRED**	**PROPOSED**
FALLKILL CREEK SETBACK (SECTION 19-5.17)	FT	30	128
MINIMUM PARKING LOT LANDSCAPED AREA AS A PERCENTAGE OF TOTAL PARKING LOT AREA (SECTION 19-6.5)	%	7%	21%
MINIMUM PARKING LOT LANDSCAPED AREAS INCLUDING 80-SF OF LAND WITH 1 MEDIUM SHADE TREE (SECTION 19-6.5)	1 PER 20 PARKING SPACES	7	9

PARKING TABLE					
ZONING DISTRICT: RESIDENTIAL NEIGHBORHOOD D (RND)					
USE: MULTIFAMILY DWELLING					
REQUIREMENTS BELOW ARE FROM THE OCTOBER 2024 CITY OF POUGHKEEPSIE ZONING AND LAND USE REGULATIONS, CHAPTER 19, ARTICLE 6, SECTION 19-6.2 AND FROM THE DOJ 2010 ADA STANDARDS FOR ACCESSIBLE DESIGN					
REQUIREMENT	**PROPOSED # DWELLING UNITS**	**REQUIRED # SPACES**	**PROPOSED # SPACES**	**REQUIRED # ADA SPACES**	**PROVIDED # ADA SPACES**
1.25 PARKING SPACES PER DWELLING UNIT	63	79	124	5	5

DRAWING INDEX	
Sheet Number	Sheet Title
G001	COVER SHEET
G002	NOTES & LEGENDS
C100	EXISTING CONDITIONS PLAN
C120	DEMOLITION & TREE REMOVALS PLAN
C130	SITE PLAN
C140	GRADING & DRAINAGE PLAN
C150	EROSION & SEDIMENT CONTROL PLAN
C160	UTILITY PLAN
C180	LANDSCAPING PLAN
C190	PHOTOMETRIC PLAN
C200	VEHICLE MANEUVERING PLAN
C530	SITE DETAILS 1
C531	SITE DETAILS 2
C540	STORMWATER DETAILS
C550	EROSION & SEDIMENT CONTROL DETAILS
C560	WATER DETAILS 1
C561	WATER DETAILS 2
C570	SANITARY SEWER DETAILS
C580	LANDSCAPING DETAILS

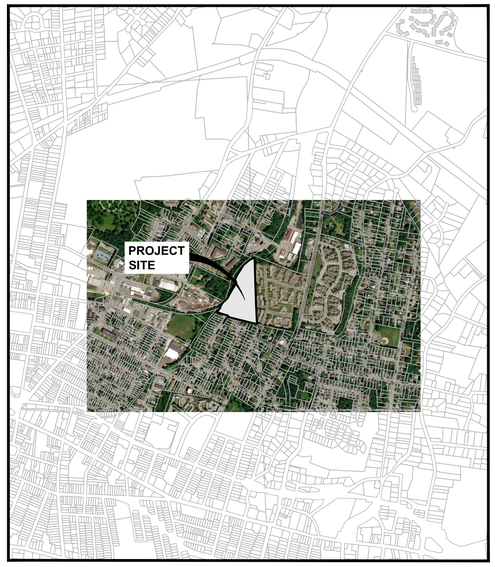

AREA MAP
SCALE: 1"=1000'



LOCATION MAP
SCALE: 1"=500'

CITY PLANNING BOARD
CITY OF POUGHKEEPSIE, NEW YORK
SITE PLAN APPROVAL

FILE NO:
PROJECT NAME:
PROJECT LOCATION:
APPLICANT:

OFFICIALLY APPROVED AT THE PLANNING BOARD

MEETING HELD THE _____ DAY OF _____ 2____

PLANNING CHAIR:

DESIGNEE:

DATE SIGNED:

CONDITION(S):

CITY OF POUGHKEEPSIE DEPARTMENTAL SIGNATURES

FIRE CHIEF	DATE
POLICE CHIEF	DATE
BUILDING INSPECTOR	DATE
CITY ENGINEER	DATE
COMMISSIONER OF PUBLIC WORKS	DATE

ADJOINING PARCELS

1. GEORGES, ANTHONY J
JOHNSON, IRVIN
50 W AMOLD RD
POUGHKEEPSIE, NY 12601
TAX ID No: 131300-6162-74-626174

2. GEORGES, ANTHONY J
JOHNSON, IRVIN
W AMOLD RD
POUGHKEEPSIE, NY 12601
TAX ID NO: 131300-6162-74-631172

3. GEORGES, ANTHONY J
JOHNSON, IRVIN
50 W AMOLD RD
POUGHKEEPSIE, NY 12601
TAX ID NO: 131300-6162-74-636171

4. KANE, JOSEPH
SCHOONMAKER, AMANDA
146 CORLIES AVE
POUGHKEEPSIE, NY 12601
TAX ID NO: 131300-6162-74-643173

5. JOSEPH ASTACIO (PRIMARY)
ANJANETTE BURGOS (ADDITIONAL)
CHRISTIAN F. BURGOS (ADDITIONAL)
142 CORLIES AVE
POUGHKEEPSIE, NY 12601
TAX ID No: 131300-6162-74-642168

6. JOSEPH ASTACIO (PRIMARY)
ANJANETTE BURGOS (ADDITIONAL)
CHRISTIAN F. BURGOS (ADDITIONAL)
142 CORLIES AVE
POUGHKEEPSIE, NY 12601
TAX ID NO: 131300-6162-74-641163

7. KANE, JOSEPH
SCHOONMAKER, AMANDA
146 CORLIES AVE
POUGHKEEPSIE, NY 12601
TAX ID NO: 134689-6162-19-649171

8. JOSEPH ASTACIO (PRIMARY)
ANJANETTE BURGOS (ADDITIONAL)
CHRISTIAN F. BURGOS (ADDITIONAL)
142 CORLIES AVE
POUGHKEEPSIE, NY 12601
TAX ID NO: 134689-6162-19-648165

9. WOOD, NICHOL SL
143 CORLIES AVE
POUGHKEEPSIE, NY 12601
TAX ID NO: 134689-6162-19-663164

10. MOUNTAIN BROOK GARDENS LLC
134 INNIS AVE
POUGHKEEPSIE, NY 12601
TAX ID No: 134689-6162-19-685225

11. CITY OF POUGHKEEPSIE
26 HOWARD ST
POUGHKEEPSIE, NY 12601
TAX ID No: 131300-6162-66-705372

12. CITY OF POUGHKEEPSIE
25 HOWARD ST
POUGHKEEPSIE, NY 12601
TAX ID No: 134689-6162-15-668303

13. HIGHRIDGE GARDENS HOUSING
140-150 HUDSON AVE EXT
POUGHKEEPSIE, NY 12601
TAX ID NO: 131300-6162-65-590267

14. BSM3 HOLDINGS, LLC
1913 ROUTE 44
PLEASANT VALLEY, NY 12569
TAX ID NO: 131300-6162-73-567244

15. MILLENS , JOAN TRUSTEE (PRIMARY)
LENEFSKY , DAVID TRUSTEE (ADDITIONAL)
MULA , PAUL TRUSTEE
20 VAN KLEECK DR
POUGHKEEPSIE, NY 12601
TAX ID NO: 131300-6162-73-528212

16. TOWN OF POUGHKEEPSIE
COTTAGE ST REAR
POUGHKEEPSIE, NY 12601
TAX ID NO: 131300-6162-73-562189

17. SMITH , HEYWOOD V (PRIMARY)
GREEN SMITH , PAMELA (ADDITIONAL)
45 FITCHETT ST
POUGHKEEPSIE, NY 12601
TAX ID No: 131300-6162-73-587190

18. JOHNSON , ALLEN JR III
FITCHETT ST
POUGHKEEPSIE, NY 12601
TAX ID No: 131300-6162-73-602181

19. JOHNSON , ALLEN JR III
51 W ARNOLD RD
POUGHKEEPSIE, NY 12601
TAX ID No: 131300-6162-73-612178

20. BSM3 HOLDINGS, LLC
1913 ROUTE 44
PLEASANT VALLEY, NY 12569
TAX ID NO: 131300-6162-73-557223

21. PHI-TAN LLC
165 SMITH ST.
POUGHKEEPSIE, NY 12601
TAX ID NO: 131300-6162-72-461234

MASELO REALTY
18 EASTVIEW ROAD
MONSEY, NY 10952
PROJECT NO: CZ81947.00
OCTOBER 28, 2025

RECORD OWNER/APPLICANT:
MASELO REALTY LLC
18 EASTVIEW RD
MONSEY NY 10952

PROJECT SITE:
MILTON STREET
CITY OF POUGHKEEPSIE,
DUTCHESS COUNTY,
NEW YORK, 12601

SITE CIVIL ENGINEER:
LABELLA ASSOCIATES
21 FOX STREET, POUGHKEEPSIE, NY 12601
PHONE: (845) 454-3980

TAX MAP INFORMATION:
CITY OF POUGHKEEPSIE, DUTCHESS COUNTY
SECTION 131300 - 6162 - BLOCK 73 - LOT 623227-0000

AREA:
TOTAL PARCEL ACREAGE: 8.713 ACRES
PROJECT DISTURBED ACREAGE: 5.26 ACRES

Dig Safely. New York
Call Before You Dig
Wait The Required Time
Confirm Utility Response
Respect The Marks
Dig With Care
800-962-7962
www.digsafelynewyork.com

UDIG·NY
SAFE DIGGING STARTS HERE

LaBella
Powered by partnership.
21 Fox Street
Poughkeepsie, NY 12601
(845) 454-3980
labellapc.com

NOT FOR CONSTRUCTION
EXP: ##/##/20##
EXP: ##/##/20##

CERTIFICATE OF AUTHORIZATION NUMBER:
PROFESSIONAL ENGINEERING: 0021272
LAND SURVEYING: 0021271
GEOLOGICAL: 0021659

It is a violation of New York Education Law Art. 145 Sec. 7209 & Art. 147 Sec. 7307, for any person, unless acting under the direction of a licensed architect, professional engineer, or land surveyor, to alter an item in any way. If an item bearing the seal of an architect, engineer, or land surveyor is altered; the altering architect, engineer, or land surveyor shall affix to the item their seal and notation "altered by" followed by their signature and date of such alteration, and a specific description of the alteration.

© 2025 LaBella Associates

MASELO REALTY LLC
18 EASTVIEW ROAD
MONSEY, NY 10952

HIGHVIEW AT THE FALLKILL CREEK
CITY OF POUGHKEEPSIE
DUTCHESS COUNTY, NEW YORK

NO:	DATE:	DESCRIPTION:
Revisions		

PROJECT NUMBER: CZ81947.00
DRAWN BY: JRR
REVIEWED BY: KGA
ISSUED FOR: PLANNING BOARD REVIEW
DATE: 10/28/2025
DRAWING NAME:

COVER SHEET

DRAWING NUMBER:

G001

Drawing Name: B:\GLOBAL\Legacy\Chazan\Projects\81900-81999\81947.00 - Highview III\DWG\00_CG01_81947_TITLE.dwg
Xrefs Attached: 24D-ROPE_81947-00_30x42
Date Plotted: Oct 27, 2025 - 4:28pm

LEGEND:

LAYOUT:

- LOT LINE
- SETBACK LINE
- EASEMENT LINE
- BUILDING
- PAVED ROAD / DRIVEWAY / PARKING AREA
- ROAD CENTER LINE
- SIDEWALK
- CURB/WING GUTTER (CONC. CURB)
- GRAVEL DRIVEWAY
- WORKLIMITS
- GUIDERAIL
- CHAIN LINK FENCE
- STOCKADE FENCE
- CONCRETE
- STABILIZED CONSTRUCTION ENTRANCE
- ROAD LINING & STRIPING
- GRAVEL PARKING AREA

SYMBOLS:

- SIGN
- SIGN
- BOLLARD
- LIGHTED BOLLARD
- CATCH BASIN
- YARD DRAIN
- CLEAN OUT / DOWN SPOUT
- FLARED END SECTION
- DRAINAGE MANHOLE
- SANITARY MANHOLE
- CLEANOUT
- WELL
- WATER VALVE
- HYDRANT
- REDUCER
- CONTROL BOX (CB)
- ELECTRIC MANHOLE
- CABLE TV PEDESTAL
- GAS VALVE
- LIGHT POLE
- LIGHT WALL PACK
- POST AND LUMINAIRE
- MAILBOX (MB)
- MONUMENT

GRADING & EROSION CONTROL:

- 500 — 10 FT CONTOUR
- 148 / 501.25 — 2 FT CONTOUR / SPOT ELEVATIONS
- TREE LINE
- SHRUB LINE
- DRAINAGE SWALE
- ORANGE CONSTRUCTION FENCE
- SILT FENCE / FIBER LOG
- CHECK DAM WITH DITCH FLOW DIRECTION
- TD — TD — TEMPORARY DIVERSION SWALE
- STRAW BALE DIKE / FIBER ROLL
- INLET PROTECTION
- PIPE OUTLET SEDIMENT TRAP (TRAP)
- SPOILS STORAGE AREA
- STABILIZED CONSTRUCTION ENTRANCE
- RIPRAP
- CONCRETE WASH OUT AREA
- TREE PROTECTION

- 25 — PARKING COUNT
- SOIL BORING
- TEST PIT
- TELEPHONE MANHOLE
- TELEPHONE PEDESTAL
- ELECTRIC TRANSFORMER
- TRAFFIC SIGNAL CONTROL BOX (TSCB)
- TRAFFIC SIGNAL HEAD
- TSP — TRAFFIC SIGNAL POLE
- UTILITY POLE
- UTILITY POLE W/ LIGHT
- UTILITY POLE W/ GUY WIRE

UTILITIES:

- OHW — OVERHEAD WIRES
- S — SANITARY SEWER LINE
- FM — FORCE MAIN
- W — WATER LINE
- ST — STORM DRAIN LINE
- E — ELECTRIC LINE
- G — GAS LINE
- SIZE & TYPE — CULVERT W/ END SECTION

DEMO:

- EXISTING FEATURE TO BE REMOVED
- EXISTING TREE TO BE REMOVED
- EXISTING SITE FEATURE TO BE REMOVED
- DEMO ASPHALT
- DEMO BUILDING
- DEMO CONCRETE
- DEMO GRAVEL SECTION
- DEMO RIP RAP SECTION
- DEMO ATHLETIC TRACK
- DEMO TREES AND SHRUBS
- N.I.C. — NOT IN CONTRACT
- EXISTING STRUCTURE TO BE REMOVED, N.I.C

DEMOLITION PLAN NOTES:

DEMOLITION NOTES:

1. REFER TO REQUIREMENTS OUTLINED IN THE EROSION & SEDIMENTS CONTROL PLANS & NOTES PRIOR TO COMMENCEMENT OF WORK.
2. BUILDING/STRUCTURE TO BE DEMOLISHED ARE SHOWN FOR REFERENCE PURPOSES ONLY AND ARE NOT TO BE DEMOLISHED AS PART OF THIS WORK. PRIOR TO DEMOLISHING ANY BUILDINGS/STRUCTURES, THE CONTRACTOR SHALL PERFORM A PRE-DEMOLITION SURVEY IN ACCORDANCE WITH STATE AND FEDERAL REGULATIONS GOVERNING THE DISPOSAL OF SOLID WASTE. THE CONTRACTOR SHALL OBTAIN ALL NECESSARY PERMITS AND APPROVALS BY THE AUTHORITY HAVING JURISDICTION.
3. CONFORM TO APPLICABLE CODE FOR DEMOLITION OF STRUCTURES, SAFETY OF ADJACENT STRUCTURES, DUST CONTROL, RUNOFF CONTROL, AND HAULING, DISPOSAL AND STORAGE OF DEBRIS.
4. PROVIDE, ERECT, AND MAINTAIN TEMPORARY BARRIERS AND SECURITY DEVICES.
5. MAINTAIN EXISTING UTILITIES TO REMAIN IN SERVICE AND PROTECT THEM AGAINST DAMAGE DURING SELECTIVE DEMOLITION OPERATIONS. DO NOT INTERRUPT EXISTING UTILITIES SERVING OPERATING FACILITIES, EXCEPT WHEN AUTHORIZED IN WRITING BY OWNER AND AUTHORITIES HAVING JURISDICTION.
6. NOTIFY ADJACENT OWNERS OF WORK THAT MAY AFFECT THEIR PROPERTY, POTENTIAL NOISE, UTILITY OUTAGE, OR DISRUPTION. COORDINATE WITH OWNER.
7. PREVENT MOVEMENT OR SETTLEMENT OF ADJACENT STRUCTURES. PROVIDE BRACING AND SHORING.
8. LOCATE AND IDENTIFY ALL EXISTING UTILITIES WITHIN THE CONSTRUCTION AREA. DISCONNECT AND SEAL OR CAP OFF UTILITY SERVICES THAT WILL BE AFFECTED BY THIS PROJECT. NOTIFY AFFECTED UTILITY COMPANIES BEFORE STARTING WORK AND COMPLY WITH THEIR REQUIREMENTS. VERIFY THAT UTILITIES HAVE BEEN DISCONNECTED AND CAPPED.
9. DEMOLISH AND REMOVE COMPONENTS IN AN ORDERLY AND CAREFUL MANNER.
10. PROTECT EXISTING FEATURES THAT ARE NOT TO BE DEMOLISHED.
11. CONDUCT OPERATIONS WITH MINIMUM INTERFERENCE TO PUBLIC OR PRIVATE ACCESSES.
12. MAINTAIN EGRESS AND ACCESS AT ALL TIMES. DO NOT CLOSE OR OBSTRUCT ROADWAYS, OR SIDEWALKS WITHOUT PERMITS. COORDINATE W/ AUTHORITY HAVING JURISDICTION.
13. CEASE OPERATIONS IMMEDIATELY IF ADJACENT STRUCTURES APPEAR TO BE IN DANGER. NOTIFY AUTHORITY HAVING JURISDICTION.
14. ROUGH GRADE AND COMPACT AREAS AFFECTED BY DEMOLITION TO MAINTAIN SITE GRADES AND CONTOURS.
15. FIELD VERIFY EXISTING CONDITIONS AND CORRELATE WITH REQUIREMENTS INDICATED ON DEMOLITION PLAN TO DETERMINE EXTENT OF SELECTIVE DEMOLITION REQUIRED.
16. CONDUCT DEMOLITION OPERATIONS AND REMOVE DEBRIS TO ENSURE MINIMUM INTERFERENCE WITH SELECTIVE DEMOLITION OPERATIONS.
17. CONDUCT DEMOLITION OPERATIONS TO PREVENT INJURY TO PEOPLE AND DAMAGE TO ADJACENT BUILDINGS AND FACILITIES TO REMAIN. ENSURE SAFE PASSAGE OF PEOPLE AROUND SELECTIVE DEMOLITION AREA.
18. USE WATER MIST, TEMPORARY ENCLOSURES AND OTHER SUITABLE METHODS TO LIMIT THE SPREAD OF DUST AND DIRT. COMPLY WITH GOVERNING ENVIRONMENTAL PROTECTION REGULATIONS. DO NOT USE WATER WHEN IT MAY DAMAGE EXISTING CONSTRUCTION, SUCH AS CAUSING FLOODING, AND TRANSPORTING POLLUTANTS.
19. REMOVE AND TRANSPORT DEBRIS IN A MANNER THAT WILL PREVENT SPILLAGE ON ADJACENT SURFACES AND AREAS.
20. CLEAN ADJACENT STRUCTURES AND IMPROVEMENTS OF DUST, DIRT AND DEBRIS CAUSED BY SELECTIVE DEMOLITION OPERATIONS. RETURN ADJACENT AREAS TO CONDITION EXISTING BEFORE START OF SELECTIVE DEMOLITION.
21. PROMPTLY DISPOSE OF DEMOLISHED MATERIALS. ALL DEBRIS RESULTING FROM DEMOLITION ACTIVITIES SHALL BE DISPOSED OF OFF-SITE AT A FACILITY APPROVED TO RECEIVE THE DEBRIS. DO NOT ALLOW DEMOLISHED MATERIALS TO ACCUMULATE ON-SITE. DO NOT BURN DEMOLISHED MATERIALS ON-SITE.
22. NO SITE DISTURBANCE IS TO OCCUR PRIOR TO CLEARING OF SUCH BY THE RETAINED QUALIFIED INSPECTOR.
23. ANY NECESSARY TREE CLEARING WILL OCCUR BETWEEN NOVEMBER 1ST AND MARCH 31ST TO AVOID DIRECT OR INDIRECT TAKE OF THE BAT SPECIES AS DURING THIS TIME THE BATS WOULD BE HIBERNATING AND NOT PRESENT ON SITE.

GRADING PLAN NOTES:

GRADING NOTES:

1. PRIOR TO SITE DISTURBANCE, CONTRACTOR TO INSTALL EROSION & SEDIMENT CONTROL MEASURES.
2. IF ROCK IS ENCOUNTERED DURING CONSTRUCTION & REMOVAL BY BLASTING IS REQUIRED, THE CONTRACTOR SHALL OBTAIN ALL NECESSARY APPROVALS AND PERMITS REQUIRED BY THE AUTHORITY HAVING JURISDICTION.
3. ALL BLASTING OPERATIONS WILL ADHERE TO NEW YORK STATE AND LOCAL AUTHORITY ORDINANCES GOVERNING THE USE OF EXPLOSIVES. THE STATE REGULATIONS ARE CONTAINED IN 12 NYCRR 39 AND INDUSTRIAL CODE RULE 753.
4. STRIP ALL TOPSOIL PRIOR TO COMMENCING EARTHWORK OPERATIONS. TOPSOIL MAY BE STORED AND REUSED IN LAWN AND PLANTING AREAS ONLY. TOPSOIL AND SEED ALL AREAS DISTURBED BY CONSTRUCTION THAT ARE TO REMAIN GREEN.
5. BOX ALL TREES AND HOUSE ALL SHRUBS AND HEDGES BEFORE PLACING EARTH AGAINST OR NEAR THEM. ORNAMENTAL TREES, SHRUBS AND HEDGES WHICH MUST BE REMOVED DURING CONSTRUCTION SHALL BE HEALED IN AND RE-PLANTED IN AS GOOD A CONDITION AS THEY WERE BEFORE THEIR REMOVAL. ANY DAMAGED TREES, SHRUBS, AND/OR HEDGES SHALL BE REPLACED AT THE CONTRACTOR'S EXPENSE.
6. ALL EARTHWORK SHALL BE SMOOTHLY AND EVENLY BLENDED INTO EXISTING CONDITIONS. NO WORK, STORAGE OR TRESPASS SHALL BE PERMITTED BEYOND THE BOUNDARIES OF ANY EASEMENT OR PROPERTY LINE.
7. REMOVE ALL VEGETATION, TREES, STUMPS, GRASSES, ORGANIC SOILS, DEBRIS AND DELETERIOUS MATERIALS WITHIN THE AREAS SLATED FOR CONSTRUCTION.
8. IF PREVIOUSLY UNKNOWN CULTURAL, ARCHEOLOGICAL, OR HISTORIC REMAINS OR ARTIFACTS ARE DISCOVERED IN THE COURSE OF CONSTRUCTION OF THIS PROJECT, THE PROJECT SPONSORS SHALL SUSPEND CONSTRUCTION OPERATIONS IN THE PERTINENT AREA AND SHALL NOTIFY THE PROJECT ENGINEER. CONSTRUCTION IN THAT AREA SHALL RESUME ONLY AFTER COMPLETION OF FEDERAL, TRIBAL, AND STATE COORDINATION TO DETERMINE WHETHER PROTECTION OR RECOVERY OF THE REMAINS IS WARRANTED, OR WHETHER THE SITE IS ELIGIBLE FOR LISTING IN THE NATIONAL REGISTER OF HISTORIC PLACES.

UTILITY PLAN NOTES:

GENERAL CONSTRUCTION NOTES:

1. ALL UNDERGROUND UTILITIES ARE SHOWN IN THEIR RELATIVE POSITION AND ARE FOR INFORMATIONAL PURPOSES ONLY. CONTRACTOR TO VERIFY THEIR ACTUAL LOCATION IN THE FIELD PRIOR TO THE COMMENCEMENT OF CONSTRUCTION.
2. ANY CONDITION ENCOUNTERED IN THE FIELD DIFFERING FROM THOSE SHOWN HEREON, SHALL BE REPORTED TO THE DESIGN ENGINEER BEFORE CONSTRUCTION IS TO PROCEED.
3. SEWER MAINS IN RELATION TO WATER MAINS: WHERE POSSIBLE, SEWERS SHALL BE LAID AT LEAST 10 (TEN) FEET HORIZONTALLY FROM ANY EXISTING OR PROPOSED WATER MAIN. VERTICAL SEPARATION SHALL BE MAINTAINED TO PROVIDE 18 (EIGHTEEN) INCHES BETWEEN TOP OF SEWER AND BOTTOM OF THE WATER MAIN AT UTILITY CROSSINGS. WHEN NOT POSSIBLE TO OBTAIN THE PROPER VERTICAL SEPARATION, SEWER PIPE SHALL BE PRESSURE RATED AND TESTED @ 150psi, 10 (TEN) FEET ON EACH SIDE OF THE WATER MAIN BEING CROSSED.
4. ALL PROPOSED UTILITIES SHALL TERMINATE 5 FEET FROM ANY PROPOSED BUILDING FACE.
5. CONTRACTOR TO COORDINATE WITH BUILDING PLANS FOR ANY CONNECTIONS.
6. ALL STORM SEWER SHALL BE SMOOTH INTERIOR HDPE UNLESS OTHERWISE SPECIFIED.
7. ALL GRAVITY SANITARY SEWER SHALL BE SDR 35 PVC UNLESS OTHERWISE SPECIFIED.
8. ALL WATER PIPE SHALL BE CL52 DUCTILE IRON PIPE UNLESS OTHERWISE SPECIFIED.
9. CONTRACTOR TO VERIFY STATUS OF ALL UTILITY SERVICES PRIOR TO INTERRUPTION.
10. EXPLORATORY EXCAVATIONS SHALL BE PERFORMED BY THE CONTRACTOR AT ALL UTILITY CONNECTION LOCATIONS AND AS NEEDED TO VERIFY EXISTING CONDITIONS PRIOR TO PERFORMING WORK.
11. BEFORE CONSTRUCTING LINES TO CONNECT TO EXISTING UTILITIES, VERIFY EXISTING UTILITY INVERTS AND NOTIFY THE ENGINEER IF ANY VARIATION FROM THE PLAN IS REQUIRED.
12. THE CONTRACTOR SHALL MAINTAIN ALL EXISTING UTILITIES IN SERVICE FOR THE DURATION OF THE WORK.
13. THE CONTRACTOR SHALL COMPLY WITH ALL REQUIRED PERMITS AND ASSOCIATED CONDITIONS.
14. CONTRACTOR SHALL BE RESPONSIBLE FOR DEWATERING UTILITY TRENCHES AND EXCAVATIONS AND FOR THE MAINTENANCE OF SURFACE DRAINAGE DURING THE COURSE OF THE WORK.
15. IF ROCK REMOVAL BY BLASTING IS REQUIRED, THE CONTRACTOR SHALL OBTAIN ALL NECESSARY APPROVALS AND PERMITS REQUIRED BY THE AUTHORITY HAVING JURISDICTION.

GENERAL CONSTRUCTION NOTES:

1. ALL UTILITY WORK INVOLVING CONNECTION TO EXISTING MUNICIPAL WATER MAIN SHALL BE COORDINATED WITH OWNER AND OWNER'S REPRESENTATIVE. NOTIFY OWNER AND THE OWNER'S REPRESENTATIVE 3 WORKING DAYS BEFORE CONNECTION IS MADE.
2. THE CONTRACTOR SHALL VERIFY THE PRESENCE OF AND EXACT LOCATION OF ALL UTILITIES PRIOR TO COMMENCING ANY EXCAVATION WORK AS THE EXACT LOCATION OF UTILITIES MAY DIFFER FROM THE LOCATION SHOWN, AND ADDITIONAL UTILITIES MAY EXIST.
3. THE CONTRACTOR SHALL REVIEW ALL FIELD UTILITY MARKOUT INFORMATION AND BRING ANY CONFLICTS TO THE ATTENTION OF THE PROJECT ENGINEER PRIOR TO COMMENCING ANY WORK OPERATIONS. TEST PITS MAY BE REQUIRED BY THE CONTRACTOR TO VERIFY ACTUAL UTILITY LOCATIONS AND/OR DEPTHS. TEST PIT OPERATIONS WILL MEET ALL NECESSARY REQUIREMENTS AS SET FORTH IN THESE PLANS, DETAILS, FEDERAL/STATE/LOCAL REGULATIONS AND ANY SPECIFIC PERMIT REQUIREMENTS.
4. THE CONTRACTOR SHALL PERFORM EXPLORATORY EXCAVATIONS AT ALL UTILITY CONNECTION LOCATIONS AND AS NEEDED TO VERIFY EXISTING CONDITIONS PRIOR TO PERFORMING WORK. THE CONTRACTOR SHALL NOTIFY THE OWNER AND OWNER'S REPRESENTATIVE 3 WORKING DAYS PRIOR TO SUCH EXCAVATIONS TO ENSURE THEIR PRESENCE.
5. THE CONTRACTOR SHALL EXERCISE CAUTION WHEN EXCAVATING FOR THE PROPOSED STRUCTURES AND WATER LINES AS THE EXACT LOCATION OF UNDERGROUND STRUCTURES AND UTILITIES ARE NOT KNOWN. ANY DAMAGE TO EXISTING STRUCTURES/UTILITIES ABOVE OR BELOW GRADE, CAUSED BY THE CONTRACTOR SHALL BE REPAIRED IMMEDIATELY BY THE CONTRACTOR AT HIS OWN EXPENSE.

SITE PLAN NOTES:

GENERAL CONSTRUCTION NOTES:

1. THE CONTRACTOR SHALL PROTECT EXISTING PROPERTY LINE MONUMENTATION. ANY MONUMENTATION DISTURBED OR DESTROYED, AS JUDGED BY THE ENGINEER OR OWNER, SHALL BE REPLACED AT THE CONTRACTOR'S EXPENSE AND UNDER THE SUPERVISION OF A NEW YORK STATE LICENSED LAND SURVEYOR.
2. ALL PAVEMENT RESTORATION SHALL MEET AND MATCH EXISTING GRADES.
3. ALL SAWCUT LINES SHALL BE PARALLEL AND CURVILINEAR TO EXISTING OR PROPOSED CURBING AND SHALL BE A CONSTANT DISTANCE OF 18" MIN AWAY.
4. ALL ARCHITECTURE IS SUBJECT TO PLANNING BOARD REVIEW.
5. NOTIFY ENGINEER 48 HOURS PRIOR TO INITIALIZATION OF ANY WORK ON SITE.
6. THE ENGINEER SHALL BE NOTIFIED IN WRITING OF ANY CONDITIONS THAT VARY FROM THOSE SHOWN ON THE PLANS. THE CONTRACTOR'S WORK SHALL NOT VARY FROM THE PLANS WITHOUT PRIOR REVIEW FROM THE ENGINEER.
7. CONTRACTOR IS RESPONSIBLE FOR EMPLOYING AND MAINTAINING ALL TRAFFIC CONTROL AND SAFETY MEASURES DURING CONSTRUCTION.
8. CONTRACTOR IS RESPONSIBLE FOR PROPERLY & SAFELY MAINTAINING AREA BETWEEN ALL ADJOINING PROPERTIES.
9. NO WORK, STORAGE OR TRESPASS SHALL BE PERMITTED BEYOND THE SITE PROPERTY LINES OR PUBLIC RIGHT-OF-WAY.
10. ALL EXISTING LAWN AREA, CURBING, PAVING, SIDEWALKS, CULVERTS OR OTHER PUBLIC OR PRIVATE PROPERTY DAMAGED BY TRENCHING OR EXCAVATION OPERATIONS SHALL BE REPAIRED OR REPLACED TO A CONDITION EQUAL TO EXISTING, AS DESCRIBED IN CONTRACT DOCUMENTS OR AS ORDERED BY ENGINEER (ASBE). MAILBOXES, SIGN POSTS, ETC SHALL BE PROTECTED OR REMOVED AND REPLACED EXACTLY AS THEY WERE BEFORE BEING DISTURBED. REMOVE AND REPLACE AFFECTED CURBING AND SIDEWALK TO NEAREST JOINT. REMOVE PAVEMENT AND REPLACE TO SAW CUT LINE. SAW CUT IN STRAIGHT LINE TO POINT NEEDED TO BLEND GRADE, REMOVE LAWN AND REPLACE TO MINIMUM LIMIT OF EXCAVATION.
11. IF PREVIOUSLY UNKNOWN CULTURAL, ARCHEOLOGICAL, OR HISTORIC REMAINS OR ARTIFACTS ARE DISCOVERED IN THE COURSE OF CONSTRUCTION OF THIS PROJECT, THE PROJECT SPONSORS SHALL SUSPEND CONSTRUCTION OPERATIONS IN THE PERTINENT AREA AND SHALL NOTIFY THE PROJECT ENGINEER. CONSTRUCTION IN THAT AREA SHALL RESUME ONLY AFTER COMPLETION OF FEDERAL, TRIBAL, AND STATE COORDINATION TO DETERMINE WHETHER PROTECTION OR RECOVERY OF THE REMAINS IS WARRANTED, OR WHETHER THE SITE IS ELIGIBLE FOR LISTING IN THE NATIONAL REGISTER OF HISTORIC PLACES.

LAYOUT NOTES:

1. BUILDING DIMENSIONS TO BE TAKEN FROM ARCHITECTURAL BUILDING PLANS. NOTIFY THE ENGINEER OF ANY DEVIATION FROM CONDITIONS SHOWN ON THIS PLAN.
2. THE CONTRACTOR SHALL BE RESPONSIBLE FOR COORDINATING ALL FIELD LAYOUT. THE CONTRACTOR SHALL TAKE TIES TO ALL UTILITY CONNECTIONS AND PROVIDE MARKED-UP AS BUILT PLANS FOR ALL UTILITIES SHOWING TIES TO CONNECTIONS, BENDS, VALVES, LENGTHS OF LINES AND INVERTS. AS-BUILT PLANS SHALL BE REVIEWED BY THE OWNER AND THE ENGINEER AND THE CONTRACTOR SHALL PROVIDE ANY CORRECTION OR ADDITIONS TO THE SATISFACTION OF THE OWNER AND THE ENGINEER BEFORE UTILITIES WILL BE ACCEPTED.

PAVING NOTES:

1. NO VEHICULAR TRAFFIC OF ANY SORT SHALL BE PERMITTED ON THE SURFACE OF SUBBASE COURSE MATERIAL ONCE IT HAS BEEN FINE GRADED, COMPACTED, AND IS READY FOR PAVING. SUBBASE MATERIAL SO PREPARED FOR PAVING SHALL BE PAVED WITHIN THREE DAYS OF PREPARATION.
2. SUBBASE MATERIAL AND THE VARIOUS ASPHALT CONCRETE MATERIALS CALLED FOR IN THESE DRAWINGS SHALL CONFORM WITH THE REFERENCED SECTION OF THE NEW YORK STATE DEPARTMENT OF TRANSPORTATION STANDARD SPECIFICATIONS FOR CONSTRUCTION AND MATERIALS, DATED **"LATEST EDITIONS"**. CONSTRUCTION SHALL BE AS FURTHER SET FORTH IN THOSE SPECIFICATIONS AND AS OTHERWISE PROVIDED FOR IN THESE DRAWINGS.
3. PLACE ASPHALT CONCRETE MIXTURE ON PREPARED SURFACE, SPREAD AND STRIKE-OFF USING A SELF-PROPELLED PAVING MACHINE, WITH VIBRATING SCREED. PLACEMENT IN INACCESSIBLE AND SMALL AREAS MAY BE BY HAND.
4. PROVIDE JOINTS BETWEEN OLD AND NEW PAVEMENTS OR BETWEEN SUCCESSIVE DAY'S WORK.
5. TACK COAT WHEN SPECIFIED OR CALLED OUT ON THE DRAWINGS OR REQUIRED BY THE REFERENCED SPECIFICATION SHALL CONFORM WITH THE FOLLOWING:
   - A. TACK COAT SHALL MEET THE MATERIAL REQUIREMENTS OF 702-90 ASPHALT EMULSION FOR TACK COAT OF THE NEW YORK STATE DEPARTMENT OF TRANSPORTATION STANDARD SPECIFICATIONS FOR CONSTRUCTION AND MATERIALS, DATED **"LATEST EDITION"**, SHALL BE APPLIED IN ACCORDANCE WITH SECTION 407 - TACK COAT SHALL BE IN ACCORDANCE WITH THOSE SPECIFICATIONS AND AS OTHERWISE PROVIDED FOR IN THESE DRAWINGS.
   - B. REMOVE LOOSE AND FOREIGN MATERIAL FROM ASPHALT SURFACE BEFORE PAVING NEXT COURSE. USE POWER BROOMS, BLOWERS OR HAND BROOM.
   - C. APPLY TACK COAT TO ASPHALT PAVEMENT SURFACES & AND SURFACES OF CURBS, GUTTERS, MANHOLES, AND OTHER STRUCTURES PROJECTING INTO OR ABUTTING PAVEMENT. DRY TO A "TACKY" CONSISTENCY BEFORE PAVING.
   - D. TACK COAT ENTIRE VERTICAL SURFACE OF ABUTTING EXISTING PAVEMENT.
6. AFTER COMPLETION OF PAVING AND SURFACING OPERATIONS, CLEAN SURFACES OF EXCESS OR SPILLED ASPHALT, GRAVEL OR STONE MATERIALS TO THE SATISFACTION OF THE ENGINEER.

TESTING WATER MAINS:

1. AFTER TRENCH HAS BEEN BACKFILLED, HYDROSTATIC ACCEPTANCE TESTS, CONSISTING OF A PRESSURE TEST AND A LEAKAGE TEST, SHALL BE PERFORMED ON ALL SECTIONS OF WATER MAINS INSTALLED. LEAKAGE TEST SHALL BE CONDUCTED CONCURRENTLY WITH PRESSURE TEST. TEST SECTION SHALL BE LIMITED TO ABOUT 2000 FT (MAX.) UNLESS OTHERWISE APPROVED BY THE ENGINEER.
2. AFTER ALL TESTS AND INSPECTIONS HAVE BEEN PERFORMED EVIDENCE OF COMPLIANCE SHALL BE FORWARDED TO OWNER/ENGINEER AND THE MUNICIPALITY PRIOR TO ACCEPTANCE.
3. ALL WATER FOR TESTS SHALL BE FURNISHED AND DISPOSED OF BY THE CONTRACTOR AT THE CONTRACTOR'S EXPENSE. SOURCE AND/OR QUALITY OF WATER WHICH THE CONTRACTOR PROPOSES TO USE IN TESTING LINES SHALL BE ACCEPTABLE TO THE ENGINEER.
4. HYDROSTATIC PRESUMPTIVE TESTS MAY BE PERFORMED WHEN SYSTEM IS PARTIALLY BACKFILLED TO SIMPLY CHECK WORK, BUT ACCEPTANCE OF SYSTEM SHALL BE BASED ON HYDROSTATIC TESTS RUN ON FINISHED SYSTEM AFTER IT HAS BEEN COMPLETELY BACKFILLED. ALL HYDROSTATIC TESTS SHALL BE PERFORMED IN ACCORDANCE WITH SECTION 4 OF AWWA STANDARD C 600 OR LATER ADDITION, AS MODIFIED HEREIN.
5. FOR THE PRESSURE TEST, SYSTEM SHALL BE PRESSURIZED AND MAINTAINED AT A MINIMUM OF 150 POUNDS PER SQUARE INCH, OR 1.5 TIMES THE WORKING PRESSURE, WHICHEVER IS GREATER, BASED ON THE ELEVATION OF THE LOWEST POINT IN THE SECTION BEING TESTED AND CORRECTED TO THE ELEVATION OF THE GAUGE. PROVISIONS SHALL BE MADE TO RELIEVE AIR TRAPPED AT HIGH POINTS IN THE SYSTEM THROUGH ADJACENT HYDRANTS OR THROUGH TAPS AND CORPORATION STOPS INSTALLED FOR THIS PURPOSE BY THE CONTRACTOR. AFTER SAID PRESSURE HAS BEEN MAINTAINED SUCCESSFULLY, WITH FURTHER PUMPING AS REQUIRED, FOR A PERIOD OF AT LEAST TWO HOURS, THE SECTION UNDER TEST SHALL BE CONSIDERED TO HAVE PASSED THE PRESSURE TEST.
6. LEAKAGE TEST SHALL BE PERFORMED CONCURRENTLY USING A MINIMUM TEST PRESSURE OF 150 LBS/SQUARE INCH, OR 1.5 TIMES THE WORKING PRESSURE, WHICHEVER IS GREATER, BASED ON THE ELEVATION OF THE LOWEST POINT IN THE SECTION UNDER TEST AND CORRECTED TO ELEVATION OF THE GAUGE. LEAKAGE TEST DURATION SHALL BE A MINIMUM OF 2 HOURS AFTER LEAKAGE RATE HAS STABILIZED.
7. MAXIMUM ALLOWABLE LEAKAGE SHALL BE AS SHOWN IN THE FOLLOWING TABLE: ALLOWABLE LEAKAGE PER 1000 FT (305M) OF PIPELINE (GPH)

AVG. TEST PRESSURE PSI	NOMINAL PIPE DIAMETER-IN. 4	6	8	10	12	14	16
450	0.57	0.86	1.15	1.43	1.72	2.01	2.29
400	0.54	0.81	1.08	1.35	1.62	1.89	2.16
350	0.51	0.76	1.01	1.26	1.52	1.77	2.02
300	0.47	0.70	0.94	1.17	1.40	1.64	1.87
275	0.45	0.67	0.90	1.12	1.34	1.57	1.79
250	0.43	0.64	0.85	1.07	1.28	1.50	1.71
225	0.41	0.61	0.81	1.01	1.22	1.42	1.62
200	0.38	0.57	0.76	0.96	1.15	1.34	1.53
175	0.36	0.54	0.72	0.89	1.07	1.25	1.43
150	0.33	0.50	0.66	0.83	0.99	1.16	1.32
125	0.30	0.45	0.60	0.76	0.91	1.06	1.21
100	0.27	0.41	0.54	0.68	0.81	0.95	1.08

8. IF LEAKAGE IN SYSTEM EXCEEDS THE SPECIFIED AMOUNT, THE CONTRACTOR SHALL, AT NO ADDED COST TO THE OWNER, LOCATE, REPAIR, AND/OR REPLACE DEFECT(S) AND RE-TEST PIPING SYSTEM.

MANHOLES AND OTHER BELOW GRADE STRUCTURES:

1. STRUCTURAL DESIGN FOR MANHOLES AND OTHER BELOW-GRADE PRECAST CONCRETE STRUCTURES:
   - A. NON-TRAFFIC LOADS: BELOW GRADE PRECAST CONCRETE STRUCTURES SHALL BE DESIGNED TO WITHSTAND LOADS IMPOSED BY STRUCTURE WEIGHT, EARTH COVER, LATERAL PRESSURE FROM EARTH AND GROUND WATER, AND LIVE LOADS SUCH AS PEDESTRIAN TRAFFIC OR MACHINERY ON OR ABOVE THE STRUCTURE; AND
   - B. TRAFFIC LOADS: BELOW GRADE PRECAST CONCRETE STRUCTURES SHALL BE DESIGNED TO ALSO WITHSTAND TRAFFIC LOADS CREATED BY AN HS20-44 TRUCK PLUS 25% IMPACT AS DEFINED IN THE LATEST EDITION OF THE AMERICAN ASSOCIATION OF STATE HIGHWAY AND TRANSPORTATION OFFICIALS (AASHTO) DESIGN STANDARDS.
2. MATERIAL WHICH SHALL BE UTILIZED IN THE CONSTRUCTION OF PRECAST CONCRETE STRUCTURES:
   - CEMENT: ASTM C-150, TYPES **I,II,III,VI**
   - SAND: NYSDOT STD. SPEC. SECTION NO. 703-0 CONCRETE SAND
   - STONE: NYSDOT STD. SPEC. SECTION NO. 703-02 COARSE AGGREGATE
   - STEEL BAR REINFORCEMENT: ASTM A615, GRADE 60
   - WIRE MESH REINFORCEMENT: ASTM A185 PLAIN
   - CONCRETE STRENGTH (28 DAY): 4,500 PSI (F'C)
   - ENTRAINED AIR: 5% MIN.
3. ALL CASTINGS (FRAMES AND COVERS, FRAMES AND GRATES, ETC.) FOR USE IN CONJUNCTION WITH MANHOLES AND OTHER BELOW GRADE STRUCTURES SHALL BE MANUFACTURED FROM GRAY IRON OR DUCTILE IRON. GRAY IRON SHALL CONFORM WITH ASTM A 48, CLASS 30B AND DUCTILE IRON SHALL CONFORM WITH ASTM A 536 AND BE OF A GRADE APPROPRIATE TO ITS INTENDED USE.
4. ALL CASTINGS (FRAMES AND COVERS, FRAMES AND GRATES, ETC.) FOR USE IN CONJUNCTION WITH MANHOLES AND OTHER BELOW GRADE STRUCTURES SHALL BE DESIGNED TO WITHSTAND AASHTO HS 20-44 HIGHWAY LOADING PLUS 25% IMPACT.
5. ALL ASTM REFERENCES SHALL BE FOR THE LATEST ACTIVE STANDARD.
6. THE GREASE TRAPS SHALL BE INSPECTED MONTHLY, PUMPED-OUT AS NECCESSARY, AND A LOG KEPT. TANKS SHOULD BE PUMPED WHEN THE BOTTOM OF THE SCUM LAYER IS WITHIN 3" OF THE BOTTOM OF THE OUTLET BAFFLE OR TEE, OR WHEN THE SLUDGE LEVEL IS WITHIN 8" OF THE OUTLET DEVICE.

WATER MAIN NOTES:

1. ALL WATER MAINS SHALL BE CEMENT LINED DUCTILE IRON PIPE, CLASS 52 PUSH-ON JOINT, UNLESS OTHERWISE SPECIFIED BY OR APPROVED BY THE WATER DEPARTMENT. JOINING SHALL EMPLOY "MEGALUG" CONNECTIONS, FIELD LOCK GASKET, OR AS ALTERNATIVELY SPECIFIED BY THE WATER DEPARTMENT. ALL WATER PIPING CONSTRUCTION SHALL BE TO THE SPECIFICATIONS OF THE WATER DEPARTMENT. WET TAP OF PUBLIC WATER SYSTEM SHALL BE APPROVED AND SUPERVISED BY THE WATER DEPARTMENT. TAPPING SLEEVE SHALL BE STAINLESS STEEL OR APPROVED EQUAL. ALL MAINLINE VALVES SHALL BE RESILIENT WEDGE OR APPROVED EQUAL.
2. THE WATER LINE MAY BE FLEXED WITHIN PIPE SPECIFICATIONS OR LAID DEEPER IN AREAS WHERE A CROSSING WITH A SANITARY LINE OCCURS, TO ACHIEVE THE REQUIRED 1.5' VERTICAL SEPARATION DISTANCE. IF THIS DISTANCE CANNOT BE REASONABLY ACHIEVED, THE CONTRACTOR SHALL USE PRESSURE RATED SANITARY SEWER PIPE OF EQUAL OR GREATER RATEING THAT THE PRESSURE CLASS FOR THE WATER LINE.
3. MINIMUM VERTICAL SEPARATION BETWEEN WATER MAINS AND SEWER PIPE SHALL BE 18 INCHES MEASURED FROM THE OUTSIDE OF THE PIPES AT THE POINT OF CROSSING. ONE FULL STANDARD LAYING LENGTH OF WATER MAIN SHALL BE CENTERED UNDER OR OVER THE SEWER SO THAT BOTH JOINTS WILL BE AS FAR FROM THE SEWER LINE AS POSSIBLE. IN ADDITION, WHEN THE WATER MAIN PASSES UNDER A SEWER, ADEQUATE STRUCTURAL SUPPORT (COMPACTED SELECT FILL) SHALL BE PROVIDED FOR THE SEWER TO PREVENT EXCESSIVE DEFLECTION OF JOINTS AND SETTLING OF THE SEWER PIPE ON THE WATER MAIN. MINIMUM HORIZONTAL SEPARATION BETWEEN PARALLEL WATER MAINS AND SEWER PIPES (INCLUDING MANHOLES AND VAULTS) SHALL BE 10 FEET MEASURED FROM THE OUTSIDE OF THE PIPES, MANHOLES OR VAULTS.
4. ALL WATER MAINS SHALL HAVE A MINIMUM OF (5) FIVE FEET OF COVER FROM THE TOP OF THE MAIN TO FINISHED GRADE. THE CONTRACTOR SHALL CHECK ALL FINISHED GRADE STAKES BEFORE TRENCHING TO ENSURE THAT ALL INSTALLED WATERMAINS WILL HAVE THE REQUIRED COVER.
5. THE SUPPLIER OF WATER MUST RECEIVE

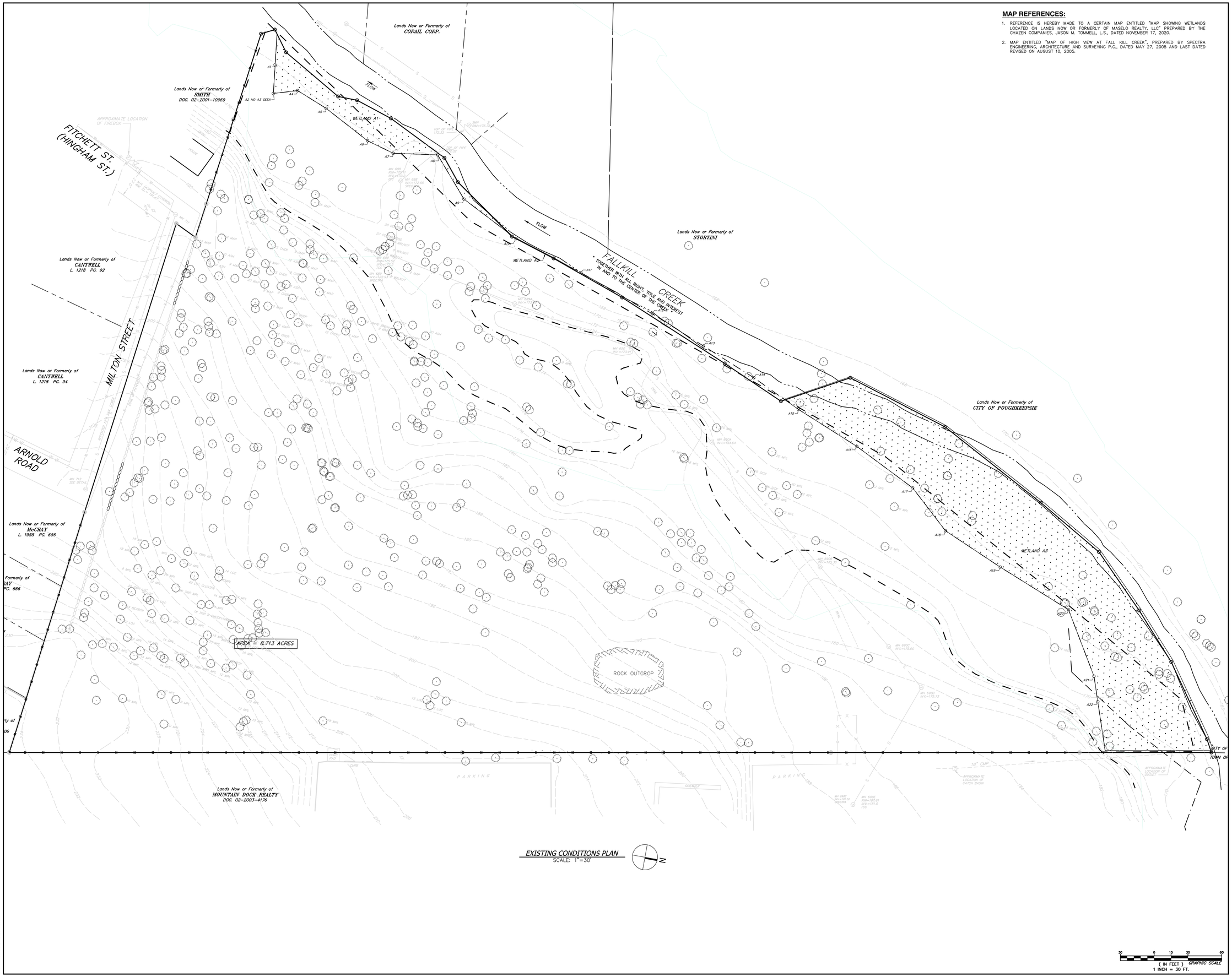

EXISTING CONDITIONS PLAN
SCALE: 1"=30'

MAP REFERENCES:

1. REFERENCE IS HEREBY MADE TO A CERTAIN MAP ENTITLED "MAP SHOWING WETLANDS LOCATED ON LANDS NOW OR FORMERLY OF MASELO REALTY, LLC" PREPARED BY THE CHAZEN COMPANIES, JASON M. TOMMELL, L.S., DATED NOVEMBER 17, 2020.
2. MAP ENTITLED "MAP OF HIGH VIEW AT FALL KILL CREEK", PREPARED BY SPECTRA ENGINEERING, ARCHITECTURE AND SURVEYING P.C., DATED MAY 27, 2005 AND LAST DATED REVISED ON AUGUST 10, 2005.

(IN FEET) GRAPHIC SCALE
1 INCH = 30 FT.

LaBella
Powered by partnership.

21 Fox Street
Poughkeepsie, NY 12601
845-454-3980

labellapc.com

NOT FOR CONSTRUCTION

EXP: ##/##/20## EXP: ##/##/20##

CERTIFICATE OF AUTHORIZATION NUMBER:
PROFESSIONAL ENGINEERING: 0021272
LAND SURVEYING: 0021271
GEOLOGICAL: 0021659

It is a violation of New York Education Law Art. 145 Sec. 7209 & Art. 147 Sec. 7307, for any person, unless acting under the direction of a licensed architect, professional engineer, or land surveyor, to alter an item in any way. If an item bearing the seal of an architect, engineer, or land surveyor is altered; the altering architect, engineer, or land surveyor shall affix to the item their seal and notation "altered by" followed by their signature and date of such alteration, and a specific description of the alteration.

© 2025 LaBella Associates

MASELO REALTY LLC
18 EASTVIEW ROAD
MONSEY, NY 10952

HIGHVIEW AT THE FALLKILL CREEK
CITY OF POUGHKEEPSIE
DUTCHESS COUNTY, NEW YORK

NO:	DATE:	DESCRIPTION:
Revisions		

PROJECT NUMBER: CZ81947.00
DRAWN BY: JRR
REVIEWED BY: KGA
ISSUED FOR: PLANNING BOARD REVIEW
DATE: 10/28/2025
DRAWING NAME:

EXISTING CONDITIONS PLAN

DRAWING NUMBER:

C100

Drawing Name: B:\GLOBAL\Legacy\Chazen\Projects\81900\81999\81947.00 - Highview II\DWG\01_C100_EXISTING CONDITIONS PLAN.dwg
Xref's Attached: XBASE-ENG_81947, XBASE-ENG-WETLAND_81947-00, XBORDER_81947-00_30x42
Date Printed: Oct 27, 2025, 4:23pm

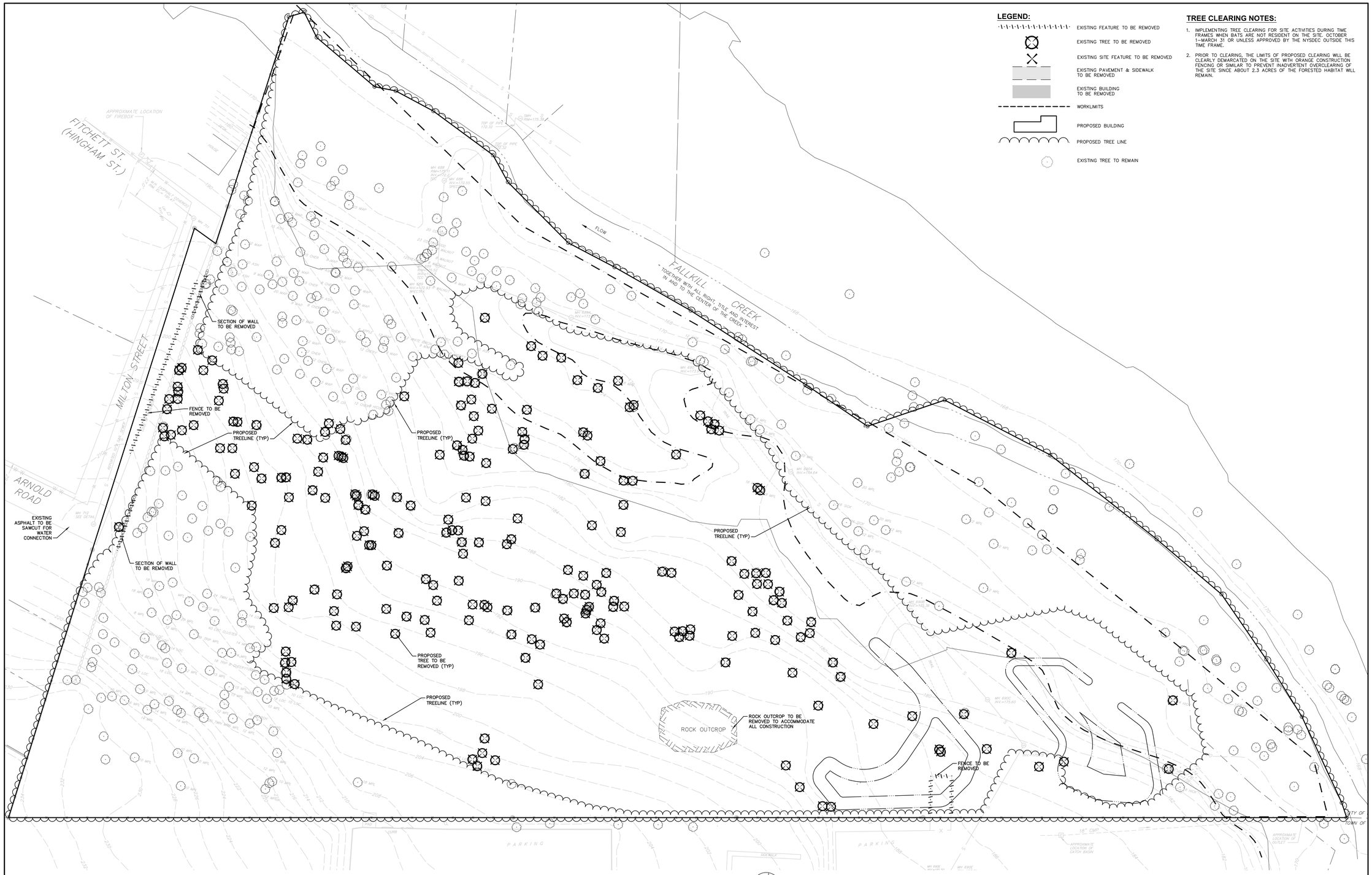

DEMOLITION & TREE REMOVALS PLAN
SCALE: 1"=30'

N

30 0 15 30 60
(IN FEET) GRAPHIC SCALE
1 INCH = 30 FT.

EXISTING TREES

SPECIES	8"	9"	10"	12"	13"	14"	15"	16"	18"	20"	22"	23"	24"	25"	28"	30"	36"	40"	TOTAL
APPLE	2	0	0	0	0	0	0	0	0	0	0	0	0	0	0	0	0	0	2
ASH	6	0	3	19	0	0	1	0	0	5	1	0	0	0	0	0	0	0	35
BIRCH	0	0	2	2	0	2	1	1	3	0	0	0	0	0	0	0	0	0	11
CHERRY	8	0	7	12	1	0	5	0	1	0	0	0	0	0	0	0	0	0	34
CHESTNUT	0	0	0	0	1	0	0	0	0	0	0	0	0	0	0	0	0	0	1
COTTONWOOD	1	0	2	1	0	0	0	0	3	0	1	3	0	0	0	0	0	0	11
HICKORY	11	1	5	27	0	0	8	0	9	11	0	0	6	0	0	0	0	0	78
LOCUST	2	0	8	11	2	7	1	1	5	5	0	0	6	0	1	0	1	1	51
MAPLE	31	30	44	81	0	20	14	8	29	17	3	0	10	1	0	2	1	0	291
OAK	0	0	1	0	0	0	1	0	1	0	0	0	0	0	0	0	0	0	3
POPLAR	0	0	0	1	0	0	2	0	0	1	0	0	0	0	0	0	0	0	4
SYCAMORE	0	0	0	15	0	0	0	3	0	5	0	0	0	0	0	0	0	0	23
WALNUT	5	0	0	1	0	0	0	0	0	0	0	0	0	0	0	0	0	0	6
WILLOW	0	0	0	1	0	0	0	0	0	1	0	0	0	0	0	0	0	0	2
																			552

TREES TO BE REMOVED

SPECIES	8"	9"	10"	12"	13"	14"	15"	16"	18"	20"	22"	23"	24"	25"	28"	30"	36"	40"	TOTAL
APPLE	0	0	0	0	0	0	0	0	0	0	0	0	0	0	0	0	0	0	0
ASH	4	0	0	1	0	0	0	0	0	1	0	0	0	0	0	0	0	0	6
BIRCH	0	0	1	0	0	0	0	1	0	0	0	0	0	0	0	0	0	0	2
CHERRY	5	0	7	2	1	0	2	0	0	0	0	0	0	0	0	0	0	0	17
CHESTNUT	0	0	0	0	0	0	0	0	0	0	0	0	0	0	0	0	0	0	0
COTTONWOOD	1	0	0	0	0	0	0	0	0	0	0	0	2	0	0	0	0	0	3
HICKORY	4	0	1	10	0	0	0	0	1	1	0	0	3	0	0	0	0	0	20
LOCUST	1	0	4	7	1	3	0	0	1	6	0	0	3	0	0	0	0	0	26
MAPLE	16	5	13	29	0	11	3	1	18	1	0	0	4	0	0	0	0	0	101
OAK	0	0	1	0	0	0	0	0	0	0	0	0	0	0	0	0	0	0	1
POPLAR	0	0	0	1	0	0	2	0	0	0	0	0	0	0	0	0	0	0	3
SYCAMORE	0	0	0	0	0	0	0	0	0	0	0	0	0	0	0	0	0	0	0
WALNUT	0	0	0	0	0	0	0	0	0	0	0	0	0	0	0	0	0	0	0
WILLOW	0	0	0	0	0	0	0	0	0	0	0	0	0	0	0	0	0	0	0
																			179

TREES TO BE PRESERVED

SPECIES	8"	9"	10"	12"	13"	14"	15"	16"	18"	20"	22"	23"	24"	25"	28"	30"	36"	40"	TOTAL
APPLE	2	0	0	0	0	0	0	0	0	0	0	0	0	0	0	0	0	0	2
ASH	2	0	3	18	0	0	1	0	0	5	1	0	0	0	0	0	0	0	30
BIRCH	0	0	1	2	0	2	1	0	3	0	0	0	0	0	0	0	0	0	9
CHERRY	3	0	0	10	1	0	3	0	1	0	0	0	0	0	0	0	0	0	18
CHESTNUT	0	0	0	0	1	0	0	0	0	0	0	0	0	0	0	0	0	0	1
COTTONWOOD	0	0	2	1	0	0	0	0	0	3	0	1	1	0	0	0	0	0	8
HICKORY	7	1	4	17	0	0	8	0	8	10	0	0	3	0	0	0	0	0	58
LOCUST	1	0	4	4	1	4	1	1	4	0	0	0	3	0	1	0	1	1	26
MAPLE	15	25	31	52	0	9	11	7	11	16	3	0	6	1	0	2	1	0	190
OAK	0	0	0	0	0	0	1	0	1	0	0	0	0	0	0	0	0	0	2
POPLAR	0	0	0	1	0	0	0	0	0	0	0	0	0	0	0	0	0	0	1
SYCAMORE	0	0	0	15	0	0	0	3	0	5	0	0	0	0	0	0	0	0	23
WALNUT	5	0	0	1	0	0	0	0	0	0	0	0	0	0	0	0	0	0	6
WILLOW	0	0	0	1	0	0	0	0	0	1	0	0	0	0	0	0	0	0	2
																			376

LaBella
Powered by partnership.
21 Fox Street
Poughkeepsie, NY 12601
845-454-3980
labellapc.com

NOT FOR CONSTRUCTION
EXP: ##/##/20## EXP: ##/##/20##

CERTIFICATE OF AUTHORIZATION NUMBER:
PROFESSIONAL ENGINEERING: 0021272
LAND SURVEYING: 0021271
GEOLOGICAL: 0021659

It is a violation of New York Education Law Art. 145 Sec. 7209 & Art. 147 Sec. 7307, for any person, unless acting under the direction of a licensed architect, professional engineer, or land surveyor, to alter an item in any way. If an item bearing the seal of an architect, engineer, or land surveyor is altered; the altering architect, engineer, or land surveyor shall affix to the item their seal and notation "altered by" followed by their signature and date of such alteration, and a specific description of the alteration.

© 2025 LaBella Associates

MASELO REALTY LLC
18 EASTVIEW ROAD
MONSEY, NY 10952

HIGHVIEW AT THE FALLKILL CREEK
CITY OF POUGHKEEPSIE
DUTCHESS COUNTY, NEW YORK

NO:	DATE:	DESCRIPTION:
Revisions		

PROJECT NUMBER: CZ81947.00
DRAWN BY: JRR
REVIEWED BY: KGA
ISSUED FOR: PLANNING BOARD REVIEW
DATE: 10/28/2025
DRAWING NAME:

DEMOLITION & TREE REMOVALS PLAN

DRAWING NUMBER:

C120

Drawing Name: B:\GLOBAL\Legacy\Chazen\Projects\81900-81999\81947.00 - Highview Hill\GIS\01_C120_81947_DEMO&TREE REMOVAL PLAN.dwg
Xref's Attached: 185&E-ENG_81947, ALAN'OUT_81947, X-BDRDER_81947-A0_24x42
Date Plotted: 10/27/2025 - 5:42pm

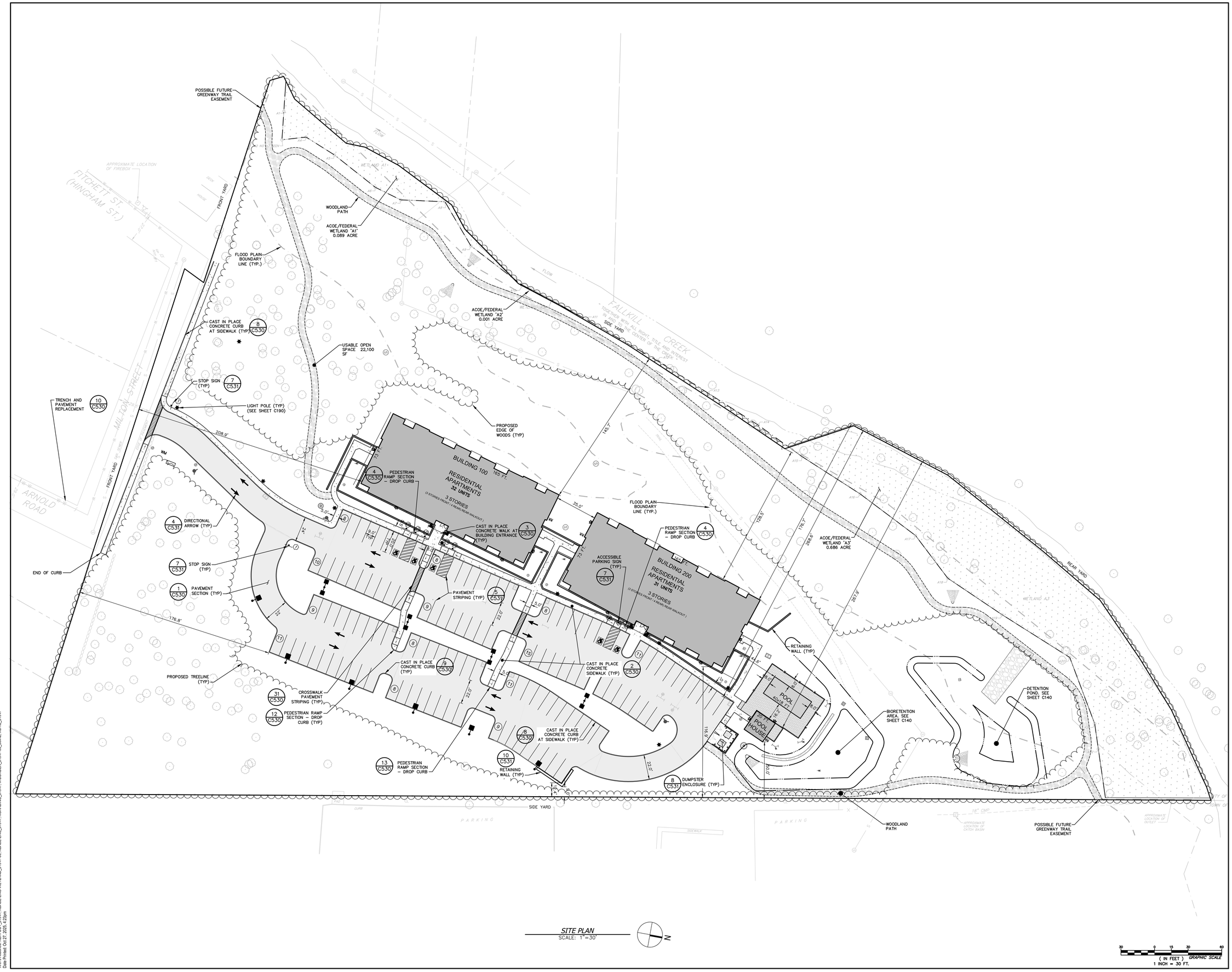

SITE PLAN
SCALE: 1"=30'

(IN FEET) GRAPHIC SCALE
1 INCH = 30 FT.

LaBella
Powered by partnership.

21 Fox Street
Poughkeepsie, NY 12601
845-454-3980

labellapc.com

NOT FOR CONSTRUCTION

EXP. ##/##/20## EXP. ##/##/20##

CERTIFICATE OF AUTHORIZATION NUMBER:
PROFESSIONAL ENGINEERING: 0021272
LAND SURVEYING: 0021271
GEOLOGICAL: 0021659

It is a violation of New York Education Law Art. 145 Sec. 7209 & Art. 147 Sec. 7307, for any person, unless acting under the direction of a licensed architect, professional engineer, or land surveyor, to alter an item in any way. If an item bearing the seal of an architect, engineer, or land surveyor is altered; the altering architect, engineer, or land surveyor shall affix to the item their seal and notation "altered by" followed by their signature and date of such alteration, and a specific description of the alteration.

© 2025 LaBella Associates

MASELO REALTY LLC
18 EASTVIEW ROAD
MONSEY, NY 10952

HIGHVIEW AT THE FALLKILL CREEK
CITY OF POUGHKEEPSIE
DUTCHESS COUNTY, NEW YORK

NO:	DATE:	DESCRIPTION:
Revisions		

PROJECT NUMBER: CZ81947.00
DRAWN BY: JRR
REVIEWED BY: KGA
ISSUED FOR: PLANNING BOARD REVIEW
DATE: 10/28/2025
DRAWING NAME:

SITE PLAN

DRAWING NUMBER:

C130

Drawing Name: B:\GLOBAL\Legacy\Chazen\Projects\81900-81999\81947.00 - Highview II\DWG\01_C130_SITE PLAN_81947-00.dwg
Xref's Attached: XLAYOUT_81947; XBASE-ENG-WETLAND_81947-00; XBASE-ENG_81947; XGRADING_81947; X-BORDER_81947-00_30x42; XUTIL_81947
Date Printed: Oct 27, 2025, 4:23pm

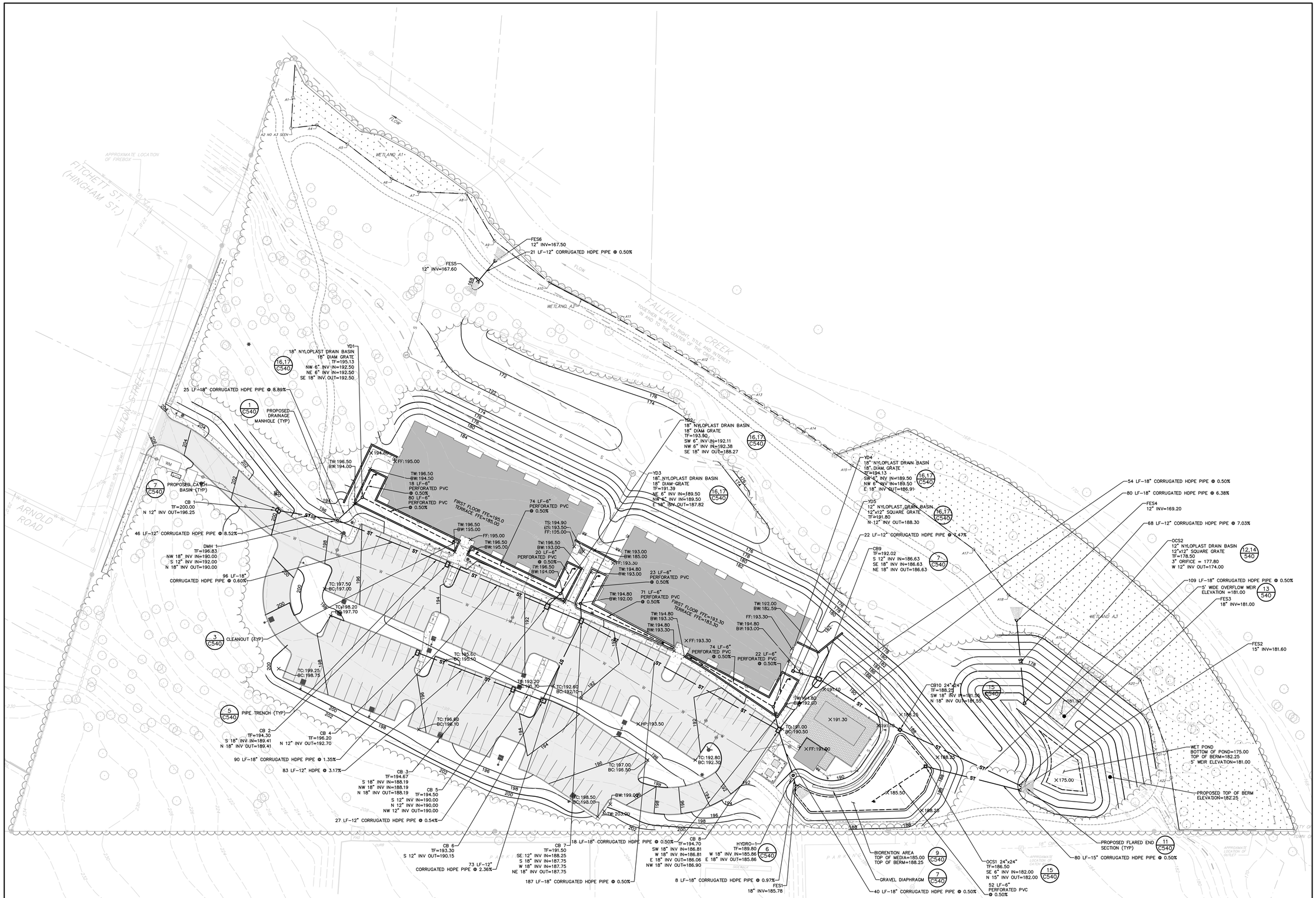

GRADING PLAN
SCALE: 1"=30'

N

30 0 15 30 60
(IN FEET) GRAPHIC SCALE
1 INCH = 30 FT.

LaBella
Powered by partnership.

21 Fox Street
Poughkeepsie, NY 12601
845-454-3980

labellapc.com

NOT FOR CONSTRUCTION

EXP: ##/##/20## EXP: ##/##/20##

CERTIFICATE OF AUTHORIZATION NUMBER:
PROFESSIONAL ENGINEERING: 0021272
LAND SURVEYING: 0021271
GEOLOGICAL: 0021659

It is a violation of New York Education Law Art. 145 Sec. 7209 & Art. 147 Sec. 7307, for any person, unless acting under the direction of a licensed architect, professional engineer, or land surveyor, to alter an item in any way, if an item bearing the seal of an architect, engineer, or land surveyor is altered; the altering architect, engineer, or land surveyor shall affix to the item their seal and notation "altered by" followed by their signature and date of such alteration, and a specific description of the alteration.

© 2025 LaBella Associates

MASELO REALTY LLC
18 EASTVIEW ROAD
MONSEY, NY 10952

HIGHVIEW AT THE FALLKILL CREEK
CITY OF POUGHKEEPSIE
DUTCHESS COUNTY, NEW YORK

NO:	DATE:	DESCRIPTION:
Revisions		

PROJECT NUMBER: CZ81947.00
DRAWN BY: JRR
REVIEWED BY: KGA
ISSUED FOR: PLANNING BOARD REVIEW
DATE: 10/28/2025
DRAWING NAME:

GRADING & DRAINAGE PLAN

DRAWING NUMBER:

C140

Drawing Name: B:\GLOBAL\Legacy\Chazen\Projects\81900-81999\81947.00 - Highview II\DWG\01_C140_GRADING_81947.00.dwg
Xrefs Attached: XLAYOUT_81947, XGRADING_81947, XEROS_81947, XBASE-ENG-WETLAND_81947-00, X-BORDER_81947-00_30x42, XUTIL_81947
Date Plotted: Oct 27, 2025 - 3:06pm

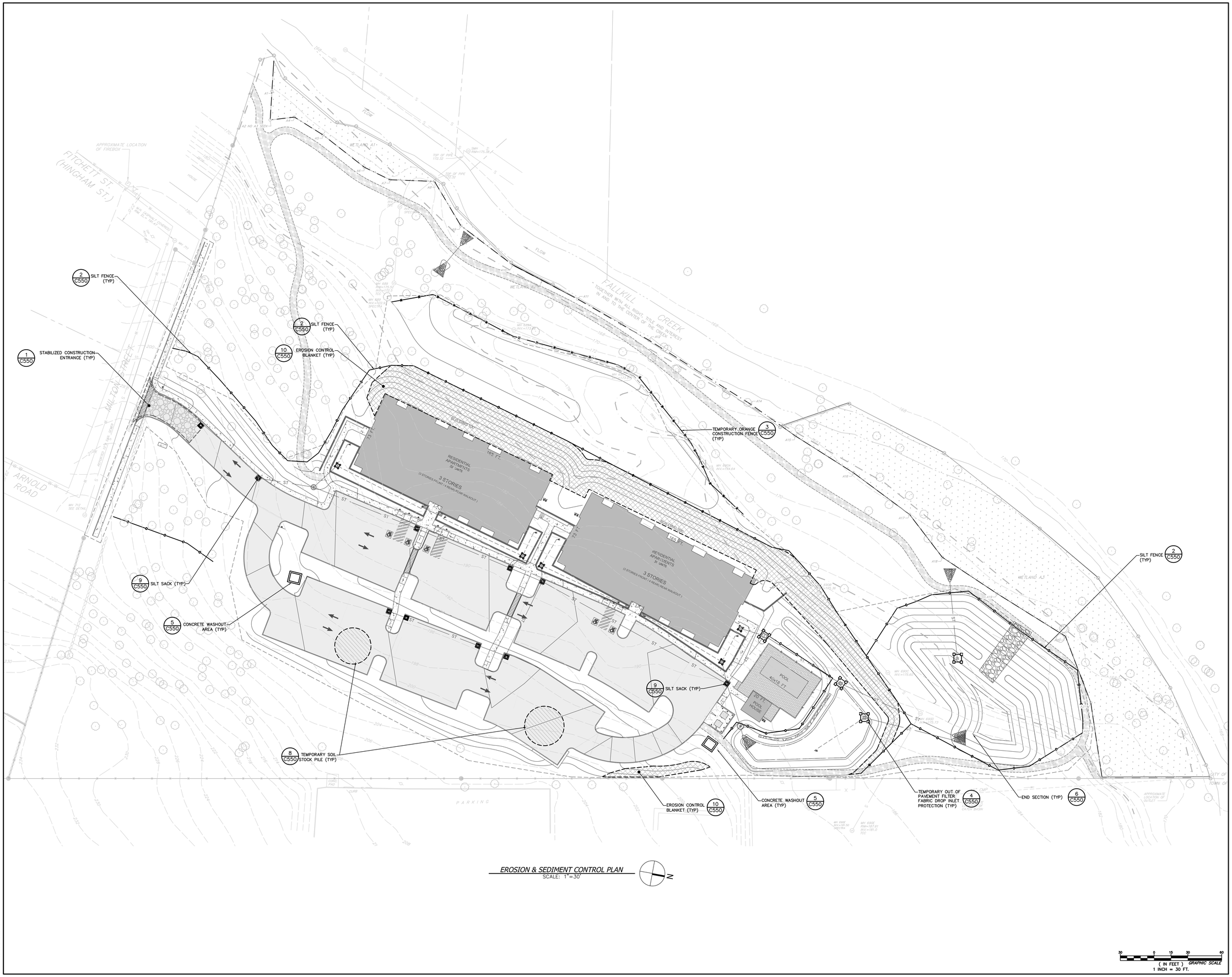

EROSION & SEDIMENT CONTROL PLAN
SCALE: 1"=30'

(IN FEET) GRAPHIC SCALE
1 INCH = 30 FT.

LaBella
Powered by partnership.

21 Fox Street
Poughkeepsie, NY 12601
845-454-3980

labellapc.com

NOT FOR CONSTRUCTION

EXP: ##/##/20## EXP: ##/##/20##

CERTIFICATE OF AUTHORIZATION NUMBER:
PROFESSIONAL ENGINEERING: 0021272
LAND SURVEYING: 0021271
GEOLOGICAL: 0021659

It is a violation of New York Education Law Art. 145 Sec. 7209 & Art. 147 Sec. 7307, for any person, unless acting under the direction of a licensed architect, professional engineer, or land surveyor, to alter an item in any way. If an item bearing the seal of an architect, engineer, or land surveyor is altered; the altering architect, engineer, or land surveyor shall affix to the item their seal and notation "altered by" followed by their signature and date of such alteration, and a specific description of the alteration.

© 2025 LaBella Associates

MASELO REALTY LLC
18 EASTVIEW ROAD
MONSEY, NY 10952

HIGHVIEW AT THE FALLKILL CREEK
CITY OF POUGHKEEPSIE
DUTCHESS COUNTY, NEW YORK

NO:	DATE:	DESCRIPTION:
Revisions		

PROJECT NUMBER: CZ81947.00
DRAWN BY: JRR
REVIEWED BY: KGA
ISSUED FOR: PLANNING BOARD REVIEW
DATE: 10/28/2025
DRAWING NAME:

EROSION & SEDIMENT CONTROL PLAN

DRAWING NUMBER:

C150

Drawing Name: B:\GLOBAL\Legacy\Chazen\Projects\81900-81999\81947.00 - Highview III\DWG\01_C150_EROS_81947-00.dwg
Xref's Attached: XLAYOUT_81947, XGRADING_81947, XEROS_81947, XUTIL_81947, XBASE-ENG-WETLAND_81947-00, XBASE-ENG_81947, X-BORDER_81947-00_30x42
Date Printed: Oct 27, 2025, 4:24pm

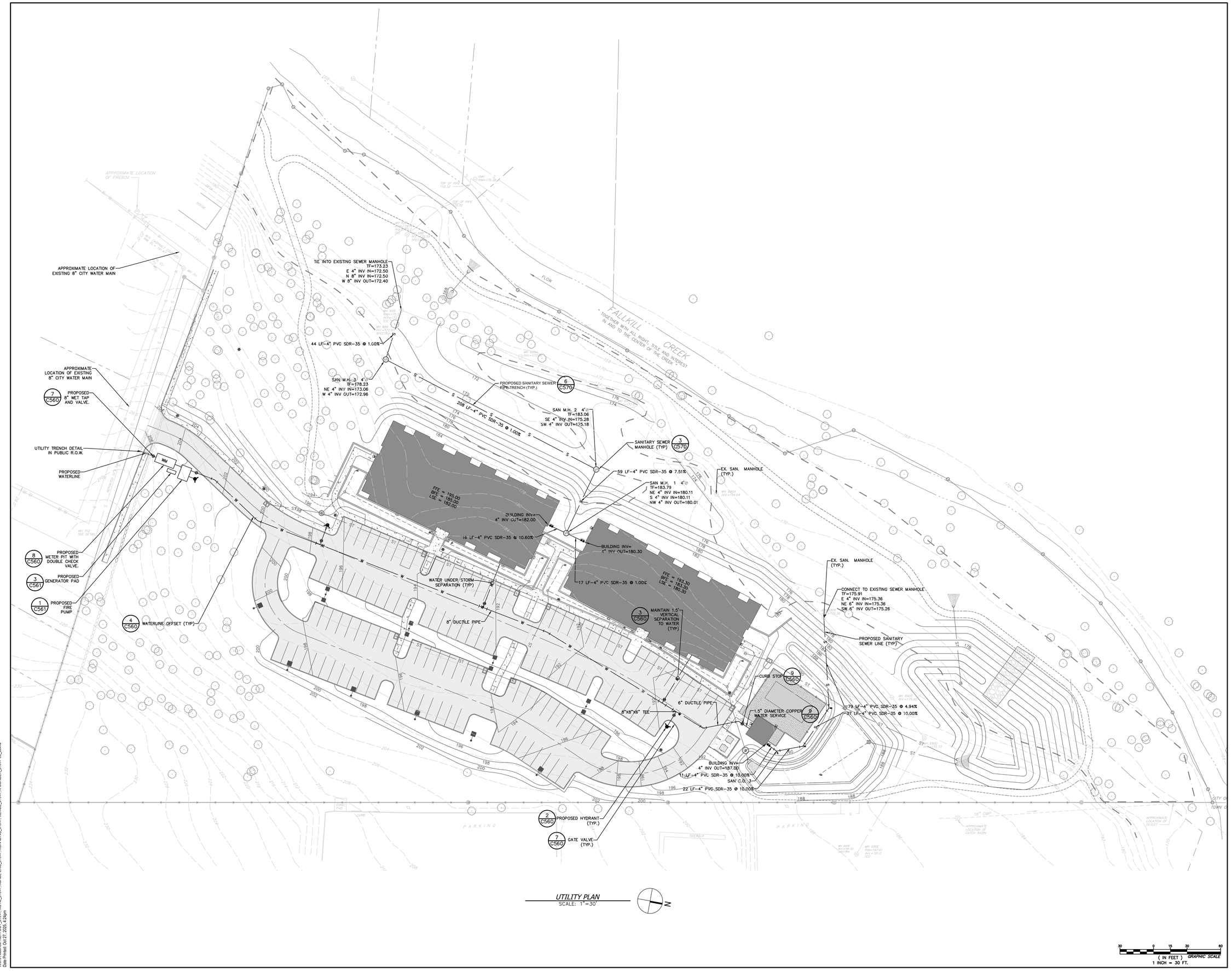

UTILITY PLAN
SCALE: 1"=30'

(IN FEET) GRAPHIC SCALE
1 INCH = 30 FT.

LaBella
Powered by partnership.

21 Fox Street
Poughkeepsie, NY 12601
845-454-3980

labellapc.com

NOT FOR CONSTRUCTION

EXP. ##/##/20## EXP. ##/##/20##

CERTIFICATE OF AUTHORIZATION NUMBER:
PROFESSIONAL ENGINEERING: 0021272
LAND SURVEYING: 0021271
GEOLOGICAL: 0021659

It is a violation of New York Education Law Art. 145 Sec. 7209 & Art. 147 Sec. 7307, for any person, unless acting under the direction of a licensed architect, professional engineer, or land surveyor, to alter an item in any way. If an item bearing the seal of an architect, engineer, or land surveyor is altered; the altering architect, engineer, or land surveyor shall affix to the item their seal and notation "altered by" followed by their signature and date of such alteration, and a specific description of the alteration.

© 2025 LaBella Associates

MASELO REALTY LLC
18 EASTVIEW ROAD
MONSEY, NY 10952

HIGHVIEW AT THE FALLKILL CREEK
CITY OF POUGHKEEPSIE
DUTCHESS COUNTY, NEW YORK

NO:	DATE:	DESCRIPTION:
Revisions		

PROJECT NUMBER: CZ81947.00
DRAWN BY: JRR
REVIEWED BY: KGA
ISSUED FOR: PLANNING BOARD REVIEW
DATE: 10/28/2025
DRAWING NAME:

UTILITY PLAN

DRAWING NUMBER:

C160

Drawing Name: B:\GLOBAL\Legacy\Chazen\Projects\81900\81947.00 - Highview III\DWG\01_C160_UTIL_81947-00.dwg
Xref's Attached: XLAYOUT_81947; XUTIL_81947; XBASE-ENG_81947; XGRADING_81947; XEROS_81947; X-BORDER_81947-00_30x42
Date Printed: Oct 27, 2025, 4:24pm

SOIL RESTORATION NOTES:

IN AREAS WHERE SOIL DISTURBANCE HAS OCCURRED OUTSIDE OF BUILDINGS AND PAVEMENT AREAS, THE DISTURBED SUB-SOILS SHALL BE RETURNED TO ROUGH GRADE AND THE FOLLOWING SOILS RESTORATION STEPS APPLIED:

1) APPLY THREE INCHES OF COMPOST OVER SOIL. COMPOST SHALL BE AGED, FROM PLANT DERIVED MATERIALS, FREE OF VIABLE WEED SEEDS, HAVE NO VISIBLE FREE WATER OR DUST PRODUCED WHEN HANDLING, PASS THROUGH A HALF INCH SCREEN AND HAVE A PH SUITABLE TO GROW DESIRED PLANTS.
2) TILL COMPOST INTO THE SUBSOIL TO A DEPTH OF AT LEAST 12-INCHES USING A CAT-MOUNTED RIPPER, TRACTOR MOUNTED DISC, OR TILLER, MIXING AND CIRCULATING AIR AND COMPOST INTO SUB-SOILS.
3) ROCK-PICK UNTIL UPLIFTED STONE/ROCK MATERIALS OF FOUR INCHES AND LARGER SIZE ARE CLEANED OFF THE SITE.
4) APPLY TOPSOIL TO A DEPTH OF SIX INCHES.

LANDSCAPING & LIGHTING LEGEND:

- PROPOSED BUILDING
- PROPOSED TREE LINE
- LANDSCAPE BED EDGING
- PROPOSED DECIDUOUS TREES
- PROPOSED CONIFEROUS TREES
- PROPOSED SHRUBS
- 43 / CO — PLANT QUANTITY / PLANT NAME
- DRIP EDGE
- MULCH BED

LANDSCAPING PLAN
SCALE: 1"=30'

N

PLANT LIST

QTY	ABRV	BOTANICAL NAME	COMMON NAME	SIZE	COND	SPACING	REMARKS
TREES							
3	AR	Acer rubrum 'October Glory'	October Glory Red Maple	2 – 2.5" Cal.	B&B	As Shown	
6	BN	Betula nigra 'Heritage'	Heritage River Birch	10–12'	B&B	As Shown	
9	GT	Gleditsia triacanthos inermis	Thornless Honeylocust	3" – 3.5" Cal.	B&B	As Shown	
6	NS	Nyssa sylvatica	Black Tupelo	3 – 3.5" Cal.	B&B	As Shown	
7	PG	Picea glauca	White Spruce	8' – 10'	B&B	As Shown	
3	PP	Picea pungens glauca	Colorado Blue Spruce	8' – 10'	B&B	As Shown	
4	TC	Tilia cordata 'Greenspire'	Greenspire Linden	3 – 3.5" Cal.	B&B	As Shown	
6	UA	Ulmus americana 'Princeton'	Princeton Elm	3–3.5"	B&B	As Shown	
SHRUBS							
38	CS	Cornus sericea 'Baileyi'	Red Twig Dogwood	#5	cont.	As Shown	
55	IV	Ilex verticillata	Winterberry Holly	#5	cont.	As Shown	
25	IT	Itea virginica	Virginia Sweetspire	#5	cont.	As Shown	
16	RR	Rhododendron 'Roseum Elegans'	Hybrid Pink Rhododendron	30–36"	B&B	As Shown	
16	RG	Rhus aromatica 'Gro Low'	Grow Low Sumac	#5	cont.	As Shown	
13	VL	Viburnum lentago	Nannyberry Viburnum	3–4'	B&B	As Shown	
7	UA	Viburnum rhytidophyllum	Leatherleaf Viburnum	3–4'	B&B	As Shown	
PERENNIALS/GRASSES							
138	PA	Pennisetum alopecuroides	Dwarf Fountain Grass	#2	cont.	As Shown	
325	PV	Panicum virgatum	Switchgrass	#2	cont.	As Shown	
34	VL	Aster novae-angliae	New England Aster	#2	cont.	As Shown	
31	EP	Purple Coneflower	Echinacea purpurea	#2	cont.	As Shown	

30 0 15 30 60
(IN FEET) GRAPHIC SCALE
1 INCH = 30 FT.

LaBella Powered by partnership.
21 Fox Street
Poughkeepsie, NY 12601
845-454-3980
labellapc.com

NOT FOR CONSTRUCTION
EXP: ##/##/20## EXP: ##/##/20##

CERTIFICATE OF AUTHORIZATION NUMBER:
PROFESSIONAL ENGINEERING: 0021272
LAND SURVEYING: 0021271
GEOLOGICAL: 0021659

It is a violation of New York Education Law Art. 145 Sec. 7209 & Art. 147 Sec. 7307, for any person, unless acting under the direction of a licensed architect, professional engineer, or land surveyor, to alter an item in any way. If an item bearing the seal of an architect, engineer, or land surveyor is altered; the altering architect, engineer, or land surveyor shall affix to the item their seal and notation "altered by" followed by their signature and date of such alteration, and a specific description of the alteration.

© 2025 LaBella Associates

MASELO REALTY LLC
18 EASTVIEW ROAD
MONSEY, NY 10952

HIGHVIEW AT THE FALLKILL CREEK
CITY OF POUGHKEEPSIE
DUTCHESS COUNTY, NEW YORK

NO.	DATE:	DESCRIPTION:
Revisions		

PROJECT NUMBER: CZ81947.00
DRAWN BY: JRR
REVIEWED BY: KGA
ISSUED FOR: PLANNING BOARD REVIEW
DATE: 10/28/2025
DRAWING NAME: **LANDSCAPING PLAN**
DRAWING NUMBER: **C180**

Drawing Name: B:\GLOBAL\Legacy\Chazam\Projects\81900-81999\81947.00 - Highview II\DWG\01_C180_81947_LAND.dwg
Xref's Attached: XLAYOUT_81947, XLANDSCAPE_81947, XBASE-ENG_81947, XBASE-ENG-WETLAND_81947-20, XGRADING_81947, XBORDER_81947-A0_36x42
Date Printed: 10/27/2025 1:47pm

PHOTOMETRIC LEGEND:

- PROPERTY LINE
- BUILDING
- 1.2 — FOOT CANDLE TICK MARKS
- PHOTOMETRIC CONTOUR
- LIGHT POLE
- LIGHT WALL PACK
- POST AND LUMINAIRE

ABBREVIATIONS:
W WALL MOUNTED
LP LIGHT POLE –ARM MOUNTED
PT POST TOP

LIGHTING NOTES:

1. GRID NUMBERS SHOWN REPRESENT FOOTCANDLE VALUES AT GROUND PLANE.
2. THE LIGHTING FIXTURES, SURFACE LOCATIONS AND ASSOCIATED PHOTOMETRIC VALUES ARE IDENTIFIED BY TCC. DETAILED DESIGN OF THE LIGHTING SPECIFICATIONS, FOUNDATION DESIGN, LIGHTING CONDUIT, WIRING, AND CONTROL CIRCUITRY SHALL BE BY OTHERS.
3. IF DISCREPENCIES EXIST BETWEEN THE LIGHTING SCHEDULE AND LIGHTING PLAN, THE PLAN SHALL DICTATE.

LIGHTING SCHEDULE

Label	Mounting Height	QTY	Manufacturer	Catalog Number	Description	Lamp	Number Lamps	Filename	Lumens per Lamp	LLF	Wattage	Efficiency	Notes
W-T2	10 ft.	2	HUBBELL OUTDOOR LIGHTING	TRP1-12L15-3K7-2	GeoPak Size 1		1	TRP1-12L15-3K7-2.IES	1497	0.92	13.9	100%	
W-T3	10 ft.	2	HUBBELL OUTDOOR LIGHTING	TRP1-12L15-3K7-3	GeoPak Size 1		1	TRP1-12L15-3K7-3.IES	1478	0.92	13.9	100%	
W-T4	10 ft.	6	HUBBELL OUTDOOR LIGHTING	TRP1-12L15-3K7-4	GeoPak Size 1		1	TRP1-12L15-3K7-4.IES	1471	0.92	13.9	100%	
PT-Y2	12 ft.	3	ARCHITECTURAL AREA LIGHTING	ALN445-Y2-32LED-3K-SBL-700	TOWNE COMMONS - ALN445 ONE PIECE SAND BLASTED LENS.	C-70-CRI DATA SHOWN IS ABSOLUTE.	1	ALN445-Y2-32LED-3K-SBL-700.ies	5015	0.93	74.8	100%	
PT-Y3	12 ft.	4	ARCHITECTURAL AREA LIGHTING	ALN445-Y3-32LED-3K-SBL-700	TOWNE COMMONS - ALN445 ONE PIECE SAND BLASTED LENS.	C-70-CRI DATA SHOWN IS ABSOLUTE.	1	ALN445-Y3-32LED-3K-SBL-700.ies	4829	0.93	74.9	100%	
PT-Y5	12 ft.	4	ARCHITECTURAL AREA LIGHTING	ALN445-Y5-32LED-3K-SBL-700	TOWNE COMMONS - ALN445 ONE PIECE SAND BLASTED LENS.	C-70-CRI DATA SHOWN IS ABSOLUTE.	1	ALN445-Y5-32LED-3K-SBL-700.ies	4771	0.93	74	100%	
(LP 1)-R2-530-L2	20 ft.	4	Selux Corporation	DSC4Lx-R2-5G530-30-XX-XX-UNV			1	DSC4Lx-R2-XX-5G530-30-XX-XX-UNV.ies	4854	0.94	94	100%	
(LP 2)-R2-350_HS	16 ft.	6	Selux Corporation	DSC4Lx-R2-5G350-30-XX-XX-UNV-HS	WITH HOUSE-SIDE SHIELD		1	DSC4Lx-R2-XX-5G350-30-XX-XX-UNV-HS.ies	2349	0.94	32	100%	

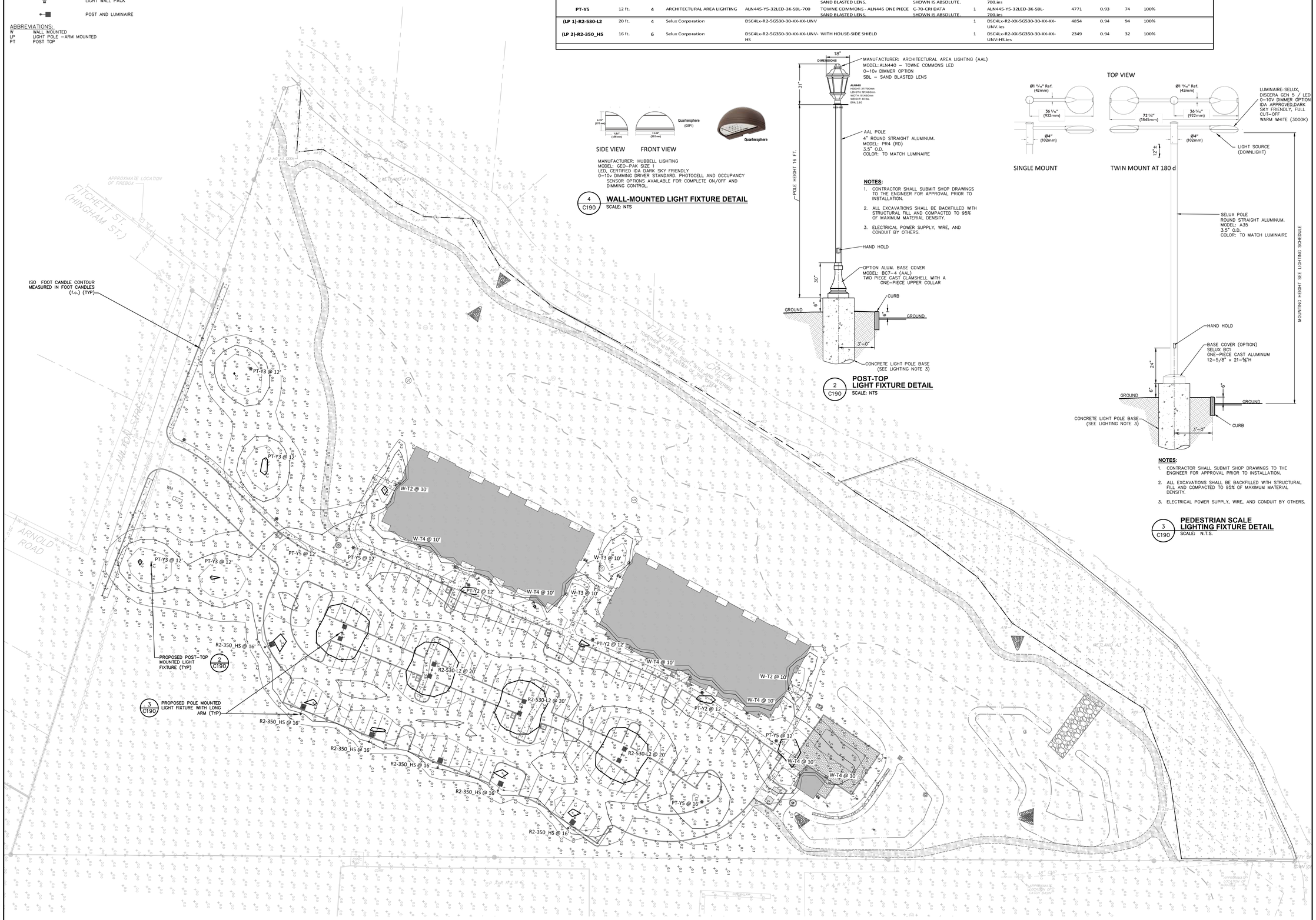

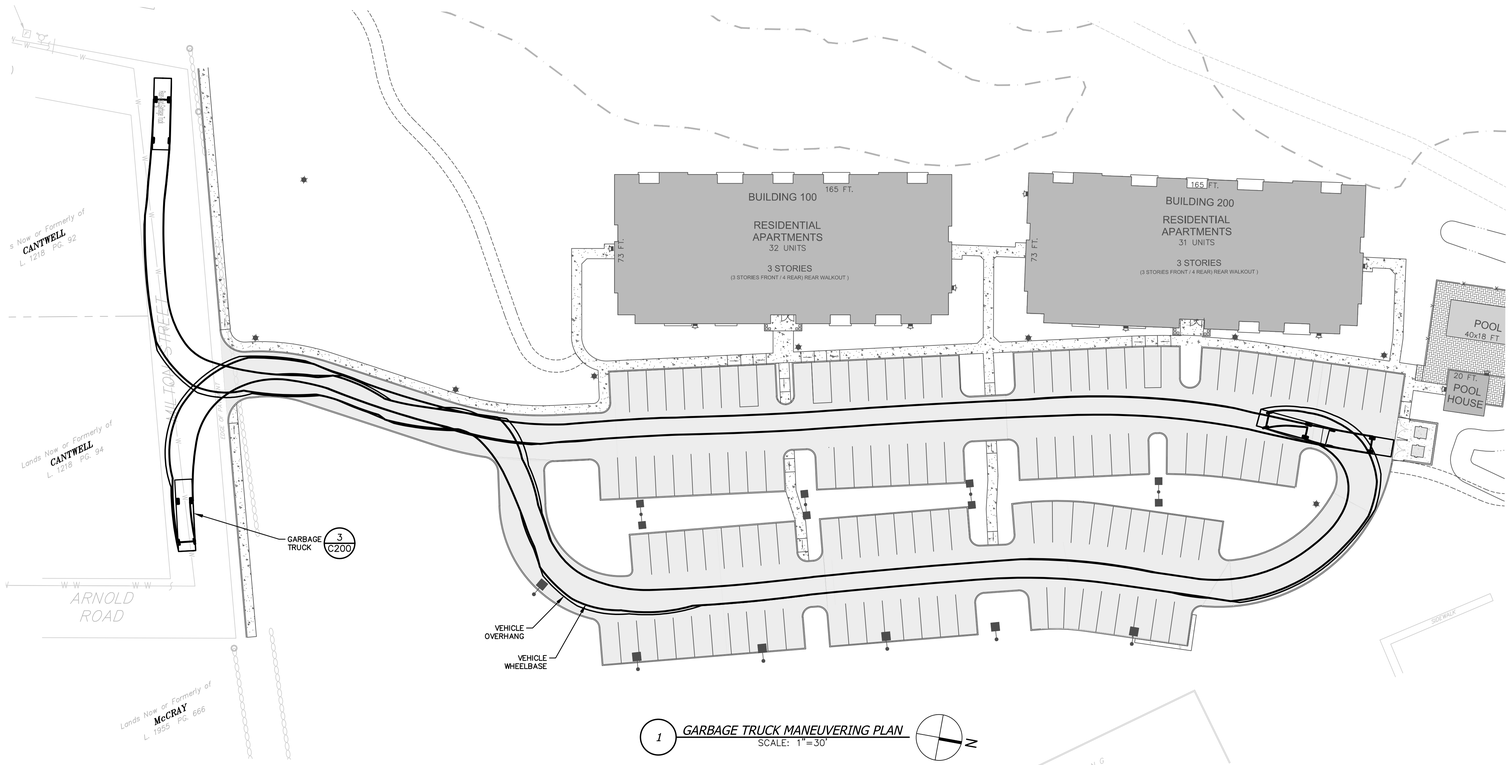

1 GARBAGE TRUCK MANEUVERING PLAN
SCALE: 1"=30'

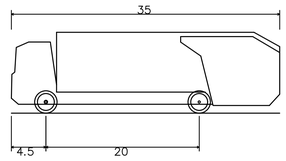

Rear-Load Garbage Truck	
Overall Length	35.000ft
Overall Width	8.375ft
Overall Body Height	10.546ft
Min Body Ground Clearance	1.000ft
Track Width	8.375ft
Lock-to-lock time	6.00s
Curb to Curb Turning Radius	29.300ft

3 GARBAGE TRUCK PROFILE
SCALE: 1"=30'

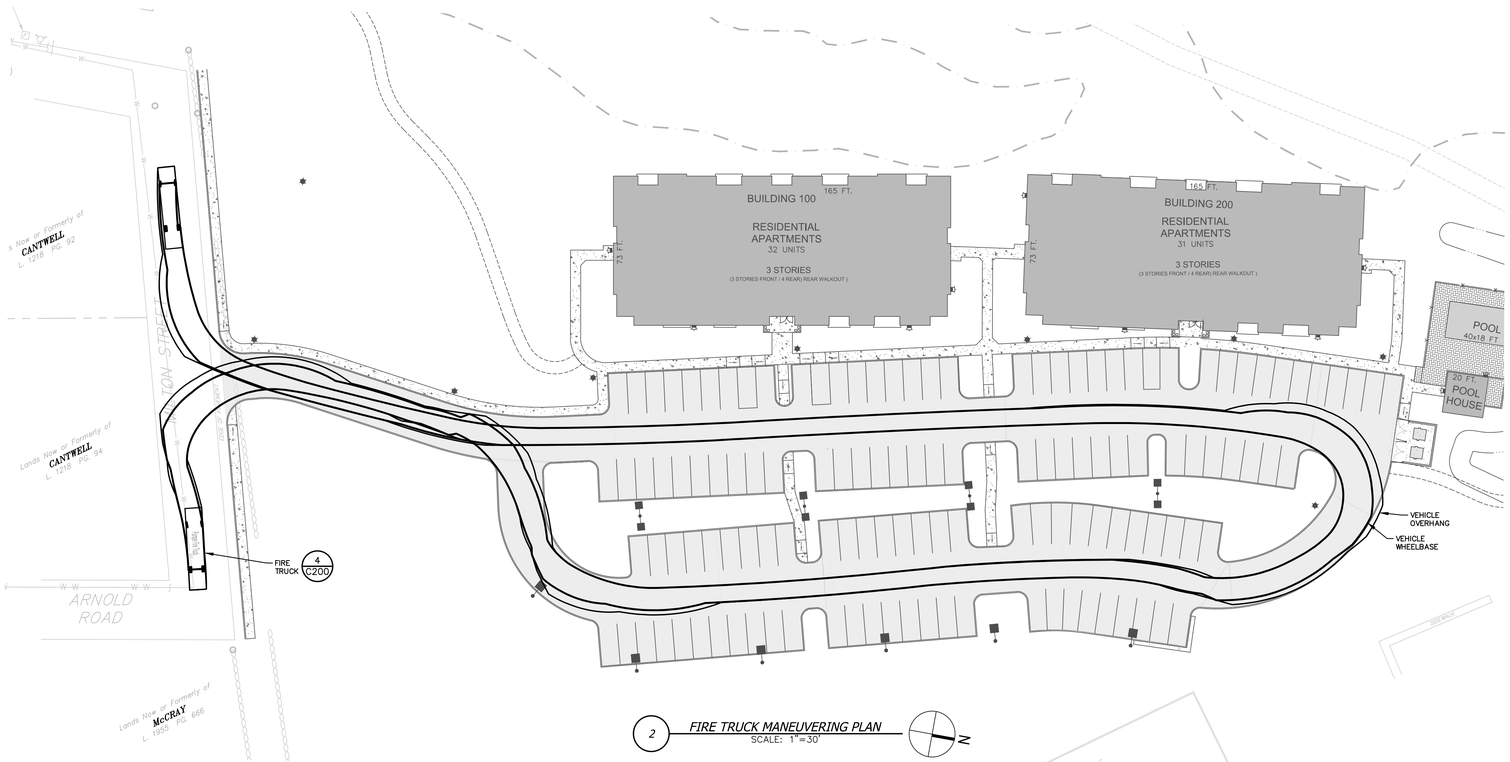

2 FIRE TRUCK MANEUVERING PLAN
SCALE: 1"=30'

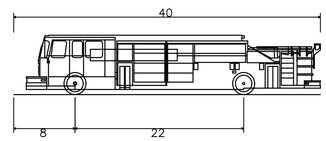

Pumper Fire Truck	
Overall Length	40.000ft
Overall Width	8.167ft
Overall Body Height	7.745ft
Min Body Ground Clearance	0.656ft
Track Width	8.167ft
Lock-to-lock time	5.00s
Max Wheel Angle	45.00°

4 FIRE TRUCK PROFILE
SCALE: 1"=30'

LaBella
Powered by partnership.
21 Fox Street
Poughkeepsie, NY 12601
845-454-3980
labellapc.com

NOT FOR CONSTRUCTION
EXP. ##/##/20## EXP. ##/##/20##

CERTIFICATE OF AUTHORIZATION NUMBER:
PROFESSIONAL ENGINEERING: 0021272
LAND SURVEYING: 0021271
GEOLOGICAL: 0021659

It is a violation of New York Education Law Art. 145 Sec. 7209 & Art. 147 Sec. 7307, for any person, unless acting under the direction of a licensed architect, professional engineer, or land surveyor, to alter an item in any way. If an item bearing the seal of an architect, engineer, or land surveyor is altered; the altering architect, engineer, or land surveyor shall affix to the item their seal and notation "altered by" followed by their signature and date of such alteration, and a specific description of the alteration.

© 2025 LaBella Associates

MASELO REALTY LLC
18 EASTVIEW ROAD
MONSEY, NY 10952

HIGHVIEW AT THE FALLKILL CREEK
CITY OF POUGHKEEPSIE
DUTCHESS COUNTY, NEW YORK

NO:	DATE:	DESCRIPTION:
Revisions		

PROJECT NUMBER: CZ81947.00
DRAWN BY: JRR
REVIEWED BY: KGA
ISSUED FOR: PLANNING BOARD REVIEW
DATE: 10/28/2025
DRAWING NAME:

VEHICLE MANEUVERING PLAN

DRAWING NUMBER:

C200

Drawing Name: B:\GLOBAL\Legacy\Chazen\Projects\81900\81999\81947.00 - Highview II\DWG\01_C200_VEHMOV_81947-00.dwg
Xref's Attached: XBASE-ENG_81947; XLAYOUT_81947; XBASE-ENG-WETLAND_81947-00; XVEHICLE_81947; XBORDER_81947-00_30x42
Date Printed: Oct 27, 2025, 4:25pm

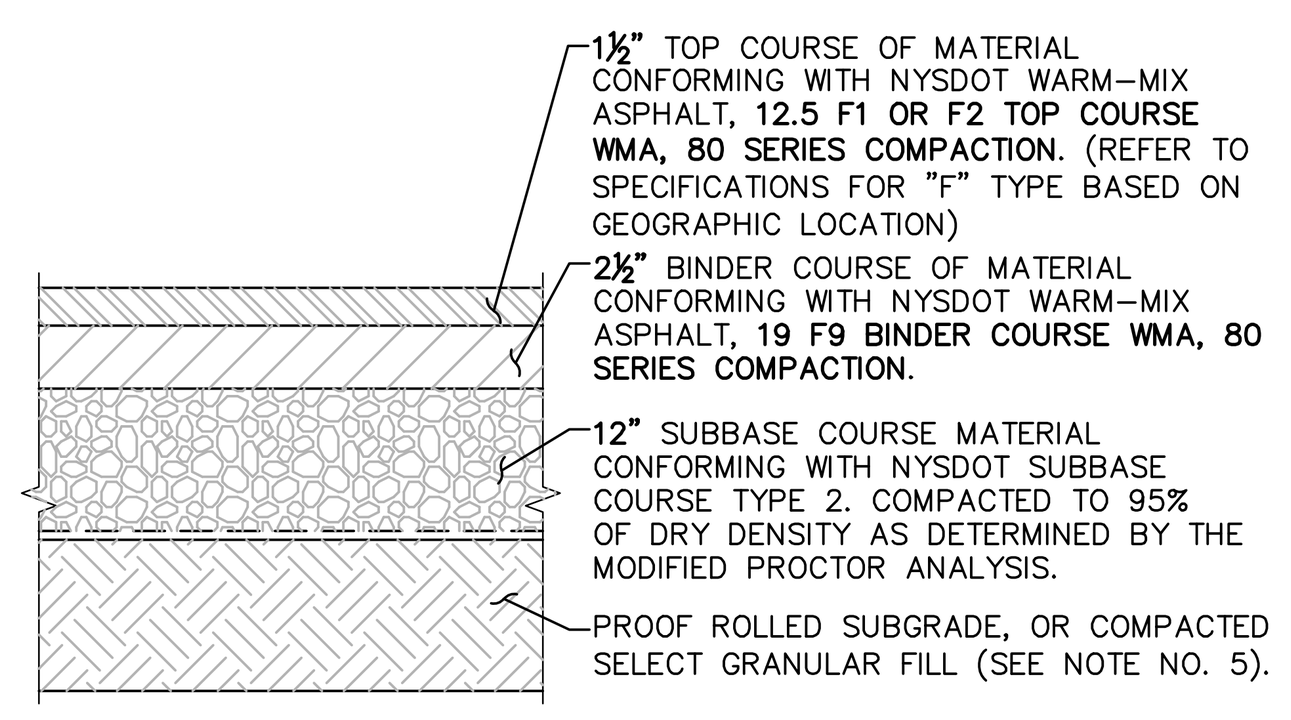

NOTES:
1. MATERIALS AND METHODS OF CONSTRUCTION SHALL BE IN CONFORMANCE WITH THE NEW YORK STATE DEPARTMENT OF TRANSPORTATION (NYSDOT) STANDARD SPECIFICATIONS FOR CONSTRUCTION AND MATERIALS, DATED **"CURRENT VERSION"**, AND ALL ADDENDA THERE TO.
2. SUBBASE MATERIAL SHALL CONFORM WITH **SECTION 304** – SUBBASE COURSE OF THE ABOVE REFERENCED NYSDOT STANDARD SPECIFICATIONS AND THE TYPE CALLED OUT IN THESE DRAWINGS.
3. HOT MIX ASPHALT (HMA) PAVEMENT SHALL CONFORM WITH **SECTION 400**–WARM MIX ASPHALT OF THE ABOVE REFERENCED NYSDOT STANDARD SPECIFICATIONS AND THE TYPE CALLED OUT IN THESE DRAWINGS. ALTHOUGH **SECTION 400** IN ITS ENTIRETY IS REFERENCED, THE WARM MIX ASPHALT (WMA) PAVEMENT(S) SPECIFIED FOR THIS CONTRACT SHALL BE AS SPECIFIED UNDER **SECTION 402**–WARM MIX ASPHALT (WMA) PAVEMENTS.
4. TACK COAT WHEN SPECIFIED OR CALLED OUT IN THESE DRAWINGS OR REQUIRED BY THE REFERENCED SPECIFICATIONS SHALL CONFORM WITH **SECTION 407**–TACK COAT OF THE ABOVE REFERENCED NYSDOT STANDARD SPECIFICATIONS.
5. WHERE IT IS NECESSARY TO PLACE FILL FOR PURPOSES OF BRINGING THE SUBGRADE ELEVATION UP TO A SPECIFIED GRADE, THE FILL MATERIAL PLACED SHALL BE IN CONFORMANCE WITH **SECTION 203**– EXCAVATION AND EMBANKMENT OF THE ABOVE REFERENCED NYSDOT STANDARD SPECIFICATIONS.
6. PAVEMENT SECTION SHOWN IS PRELIMINARY. PRIOR TO BIDDING AND COMMENCEMENT OF CONSTRUCTION, THE FINAL DESIGN OF THE PAVEMENT SECTION MUST BE PREPARED BY A NYS LICENSED PROFESSIONAL ENGINEER AND MUST BE BASED ON A CURRENT GEOTECHNICAL REPORT PREPARED FOR THIS PROJECT.

© 1 **PAVEMENT SECTION DETAIL**
SCALE: NOT TO SCALE

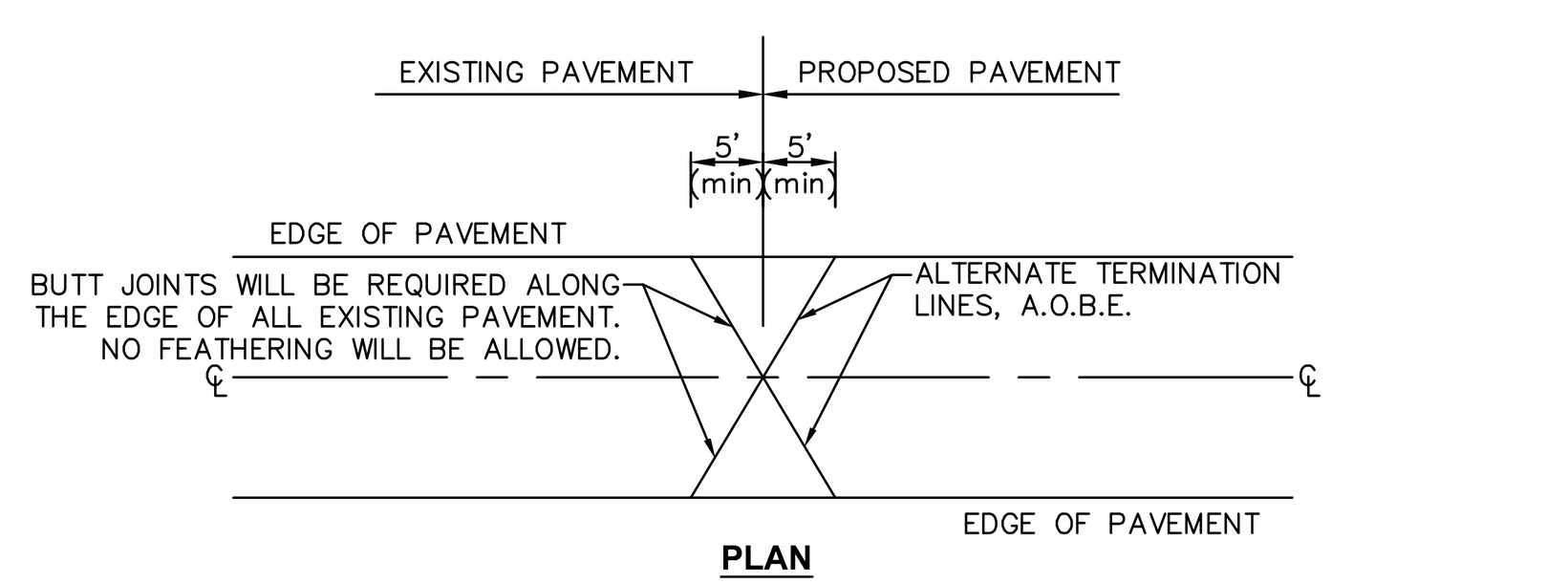

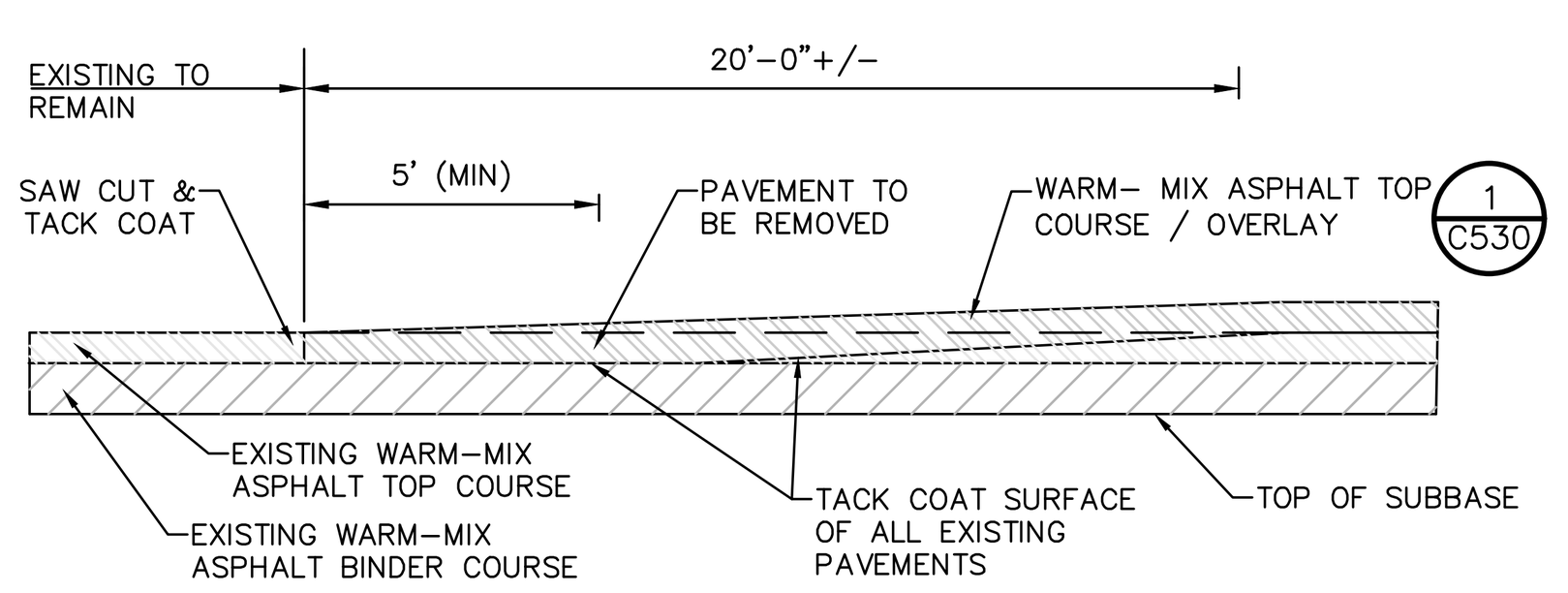

SECTION

© 5 **PAVEMENT OVERLAY TRANSITION DETAIL**
SCALE: NOT TO SCALE

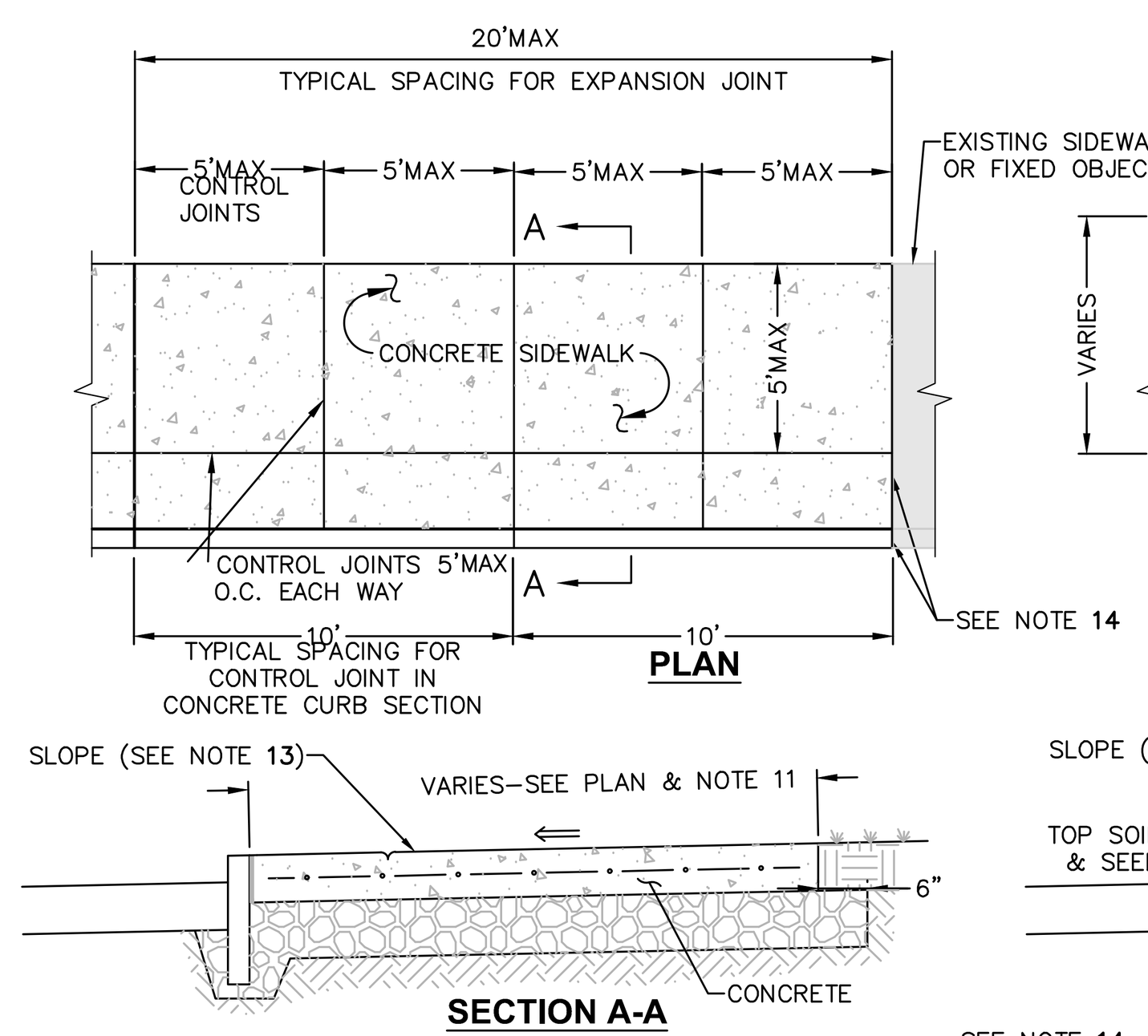

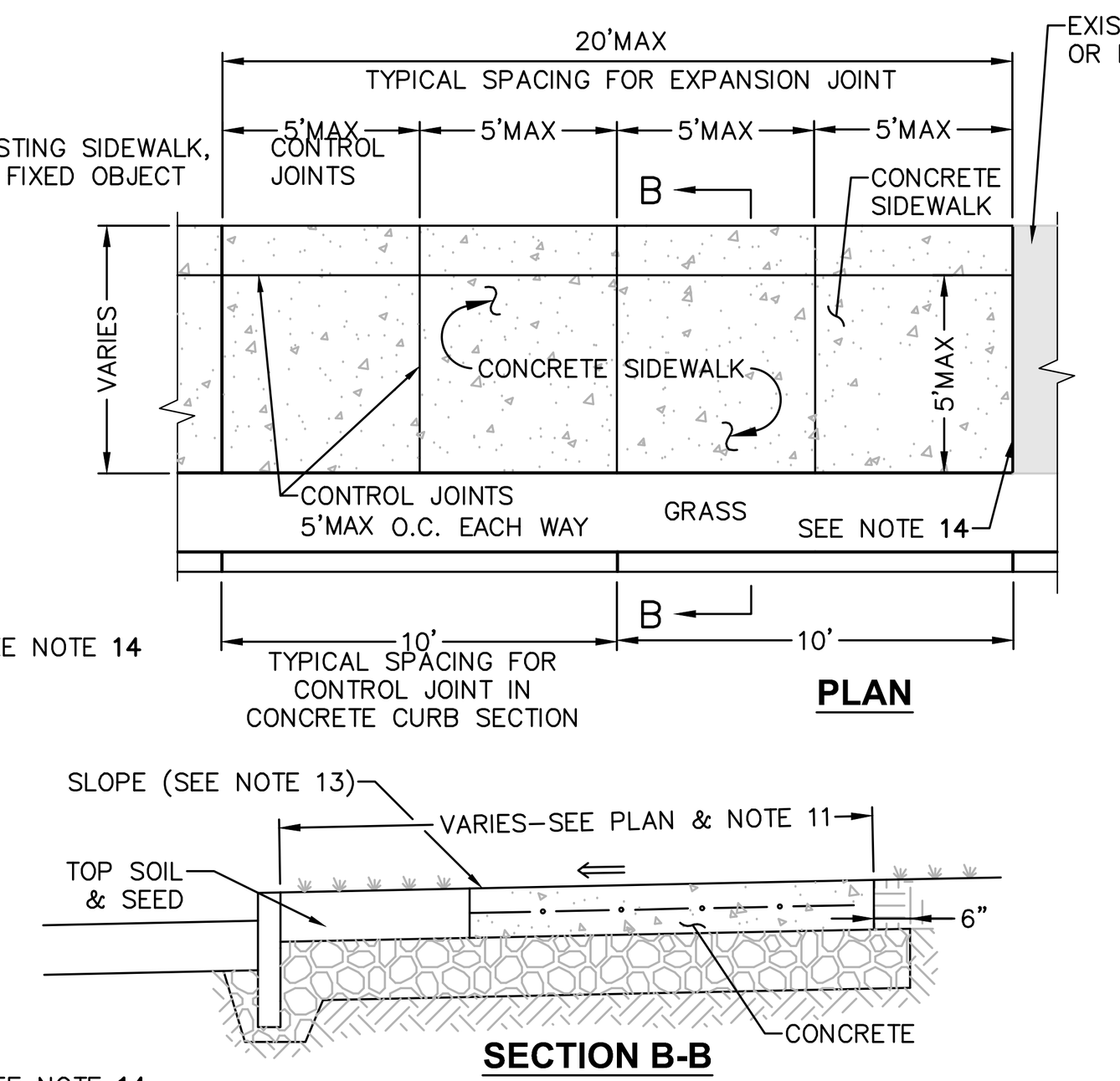

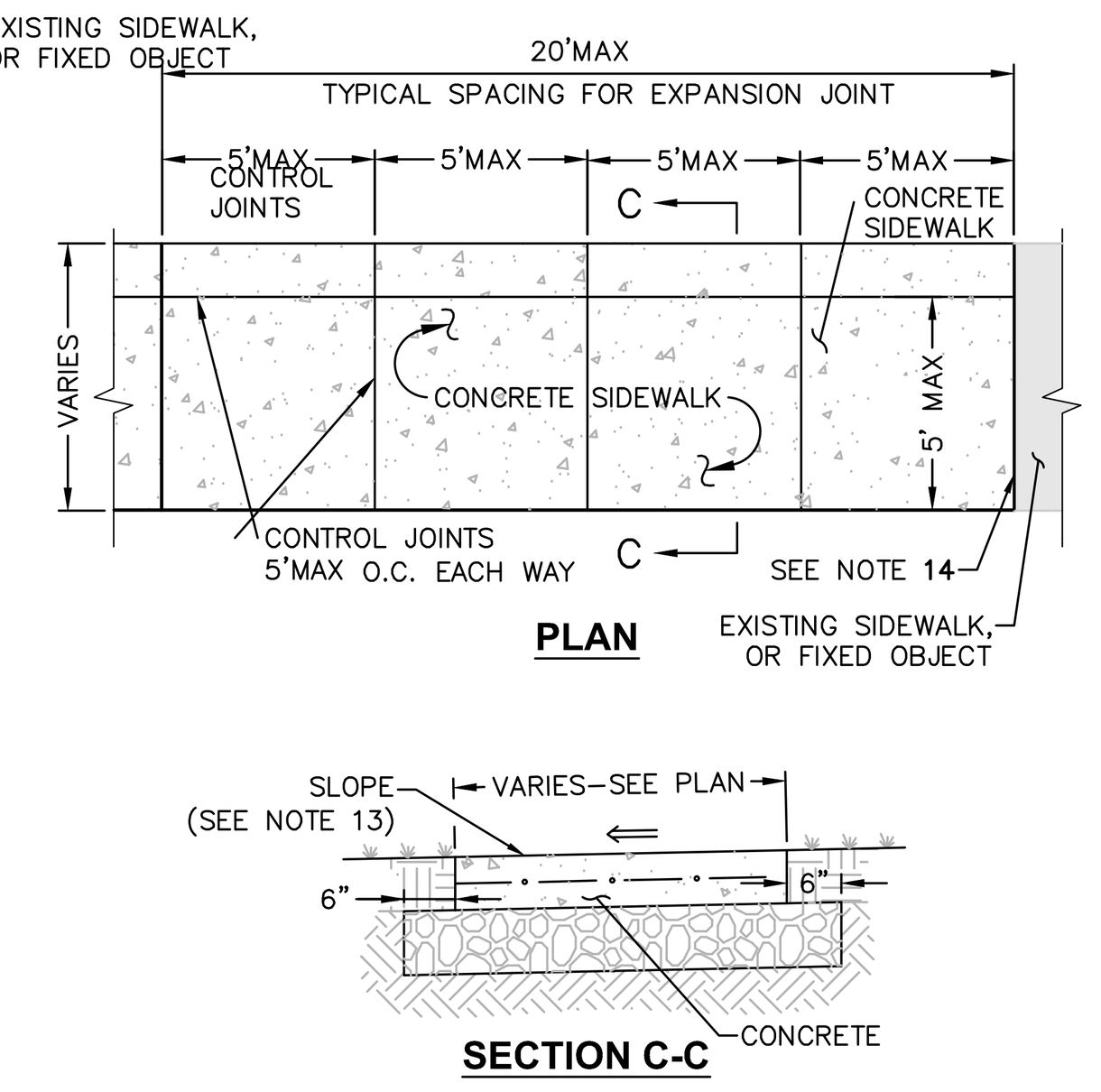

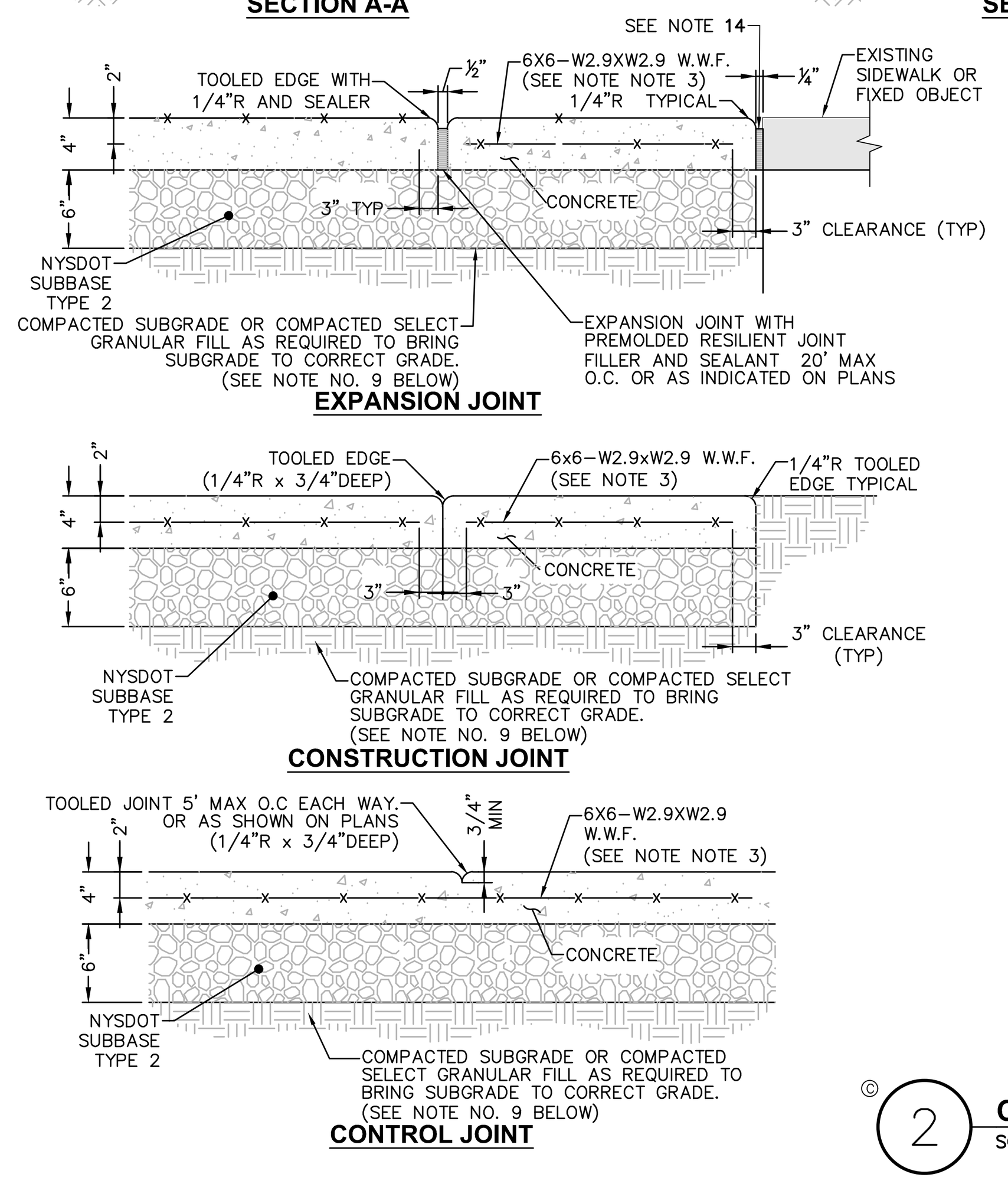

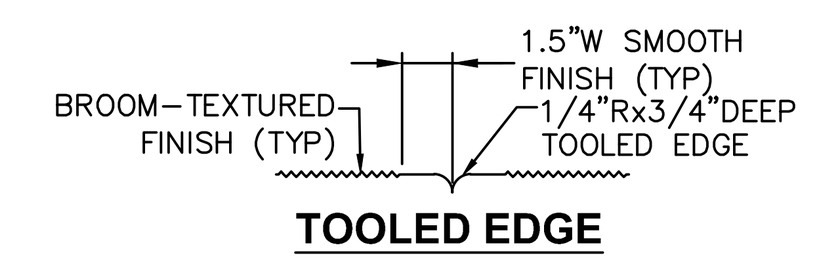

NOTES:
1. MATERIAL AND METHODS OF CONSTRUCTION SHALL BE IN CONFORMANCE WITH THE NEW YORK STATE DEPARTMENT OF TRANSPORTATION (NYSDOT) STANDARD SPECIFICATIONS FOR CONSTRUCTION AND MATERIALS, DATED "CURRENT VERSION", AND ALL ADDENDA THERE TO.
2. ALL CONCRETE SHALL BE **4,500** CONCRETE. CONCRETE MATERIALS, PLACEMENT, AND CONSTRUCTION SHALL CONFORM WITH **SECTION 500** OF THE ABOVE REFERENCED NYSDOT STANDARD SPECIFICATIONS.
3. REINFORCING STEEL FOR CONCRETE SHALL CONFORM WITH SECTION 556 – REINFORCING STEEL FOR CONCRETE STRUCTURES OF THE ABOVE REFERENCED NYSDOT STANDARD SPECIFICATIONS AND AS SPECIFICALLY CALLED OUT IN THE DRAWINGS.
4. ALL EXPOSED SURFACES SHALL HAVE A BROOM TEXTURED FINISH & TOOLED EDGES. TOOL SHALL PROVIDE MAX 1-1/2" WIDE SMOOTH TROWEL FINISH AT JOINT.
5. EXPANSION JOINTS SHALL BE LOCATED A MAXIMUM OF 20' ON CENTER, OR AS INDICATED ON PLANS.
6. JOINTS SHALL NOT BE SAW CUT.
7. EXPOSED CONCRETE SURFACES SHALL BE TREATED WITH **"SUREBOND" 1100 RESIN–BASED, WATER EMULSION CONCRETE CURING COMPOUND**, OR EQUAL. RATE AND METHOD OF APPLICATION SHALL BE IN ACCORDANCE WITH MANUFACTURER'S RECOMMENDATIONS.
8. SUBBASE MATERIAL SHALL CONFORM WITH **SECTION 304** OF THE ABOVE REFERENCED NYSDOT STANDARD.
9. WHERE IT IS NECESSARY TO PLACE FILL FOR PURPOSE OF BRINGING THE SUBGRADE ELEVATION UP TO A SPECIFIED GRADE, THE FILL MATERIAL PLACED SHALL BE IN ACCORDANCE WITH SECTION 203–EXCAVATION AND EMBANKMENT OF THE ABOVE REFERENCED NYSDOT STANDARD SPECIFICATIONS.
10. ALL WORK SHALL CONFORM WITH **SECTION 608**–SIDEWALK, DRIVEWAYS, AND BICYCLE PATHS OF THE ABOVE REFERENCED NYSDOT STANDARD SPECIFICATIONS.
11. ALL WORK SHALL CONFORM WITH AASHTO GEOMETRIC DESIGN OF HIGHWAYS AND STREET 2011, ICC A117.1 2009. OR LATEST EDITION.
12. SIDEWALK WIDTH SHOWN ON THE PLANS IS TO BE MEASURED FROM THE BACK OF THE CURB.
13. SIDEWALKS SHALL HAVE A CROSS SLOPE OF **1.5%** MAX. UNLESS OTHERWISE NOTED ON PLAN.
14. INSTALL EXPANSION JOINT WITH PREMOLDED RESILIENT JOINT FILLER & SEALANT AT ALL EXISTING SIDEWALKS, CURBS, FIXED OBJECTS, ETC., INCLUDING THOSE PLACED ON PREVIOUS DAYS.

© 2 **CONCRETE SIDEWALK DETAIL**
SCALE: NOT TO SCALE

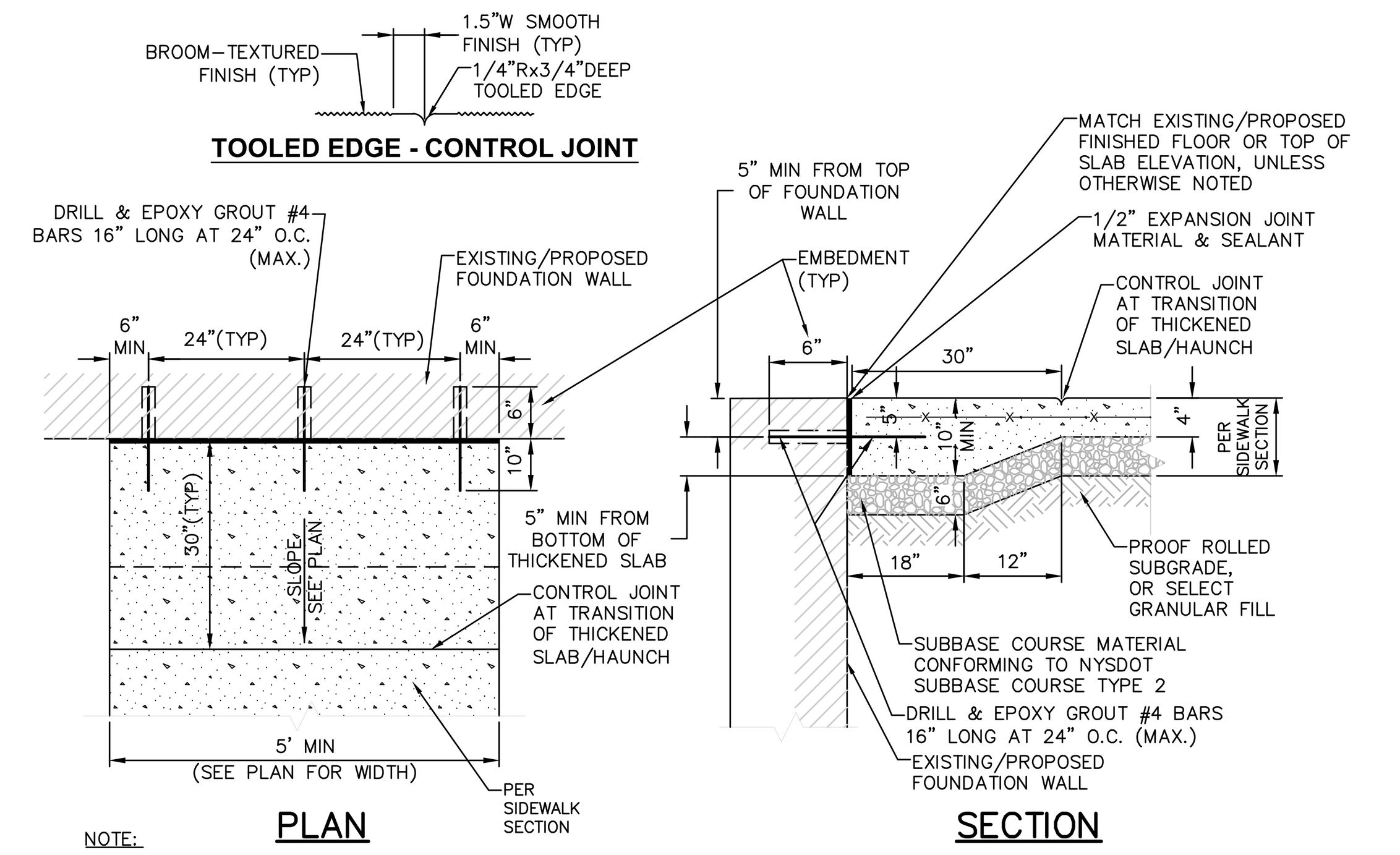

NOTE:
1. THICKENED (HAUNCH) & ADDITIONALLY REINFORCED CONCRETE SIDEWALK ENDS ARE REQUIRED AT ALL EXISTING/PROPOSED BUILDING ENTRANCES.
2. SEE CONCRETE SIDEWALK DETAIL FOR ADDITIONAL DETAILS & NOTES.

© 3 **CONCRETE SIDEWALK AT BUILDING ENTRANCES**
SCALE: NOT TO SCALE

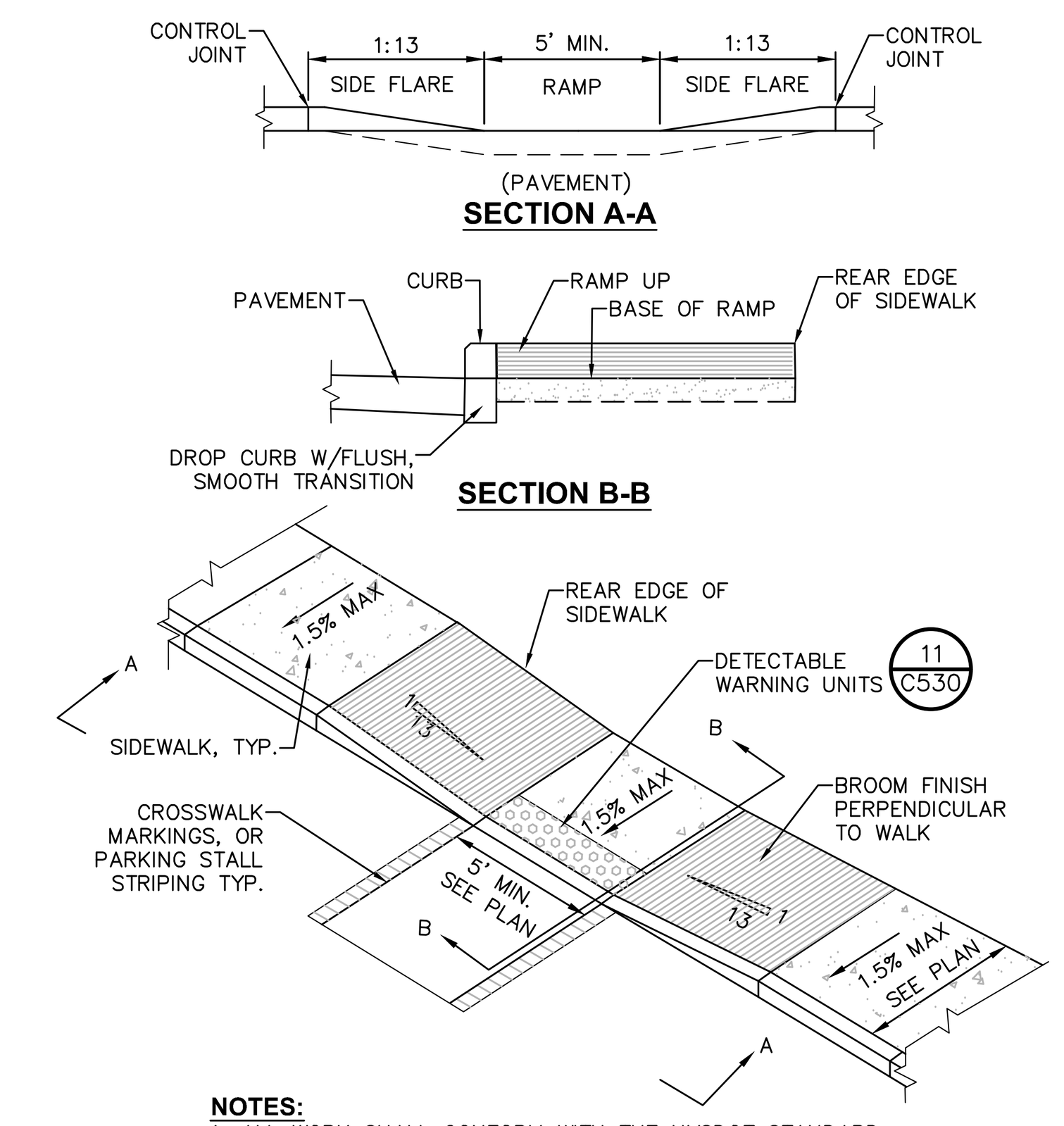

NOTES:
1. ALL WORK SHALL CONFORM WITH THE NYSDOT STANDARD SPECIFICATION FOR CONSTRUCTION AND MATERIALS DATED, **"CURRENT VERSION"**, AND ALL ADDENDA THERE TO; SPECIFICALLY **SECTION 608**– SIDEWALKS, DRIVEWAYS, AND BICYCLE PATHS.
2. SLOPE RAMP AND SIDE FLARES AS INDICATED IN THE PLANS OR AS ORDERED BY THE ENGINEER.
3. DETECTABLE WARNING UNITS SHALL BE PROVIDED ON ALL RAMPS IN ACCORDANCE W/ ADA REQUIREMENTS.

© 4 **PEDESTRIAN RAMP SECTION - DROP CURB**
SCALE: NOT TO SCALE

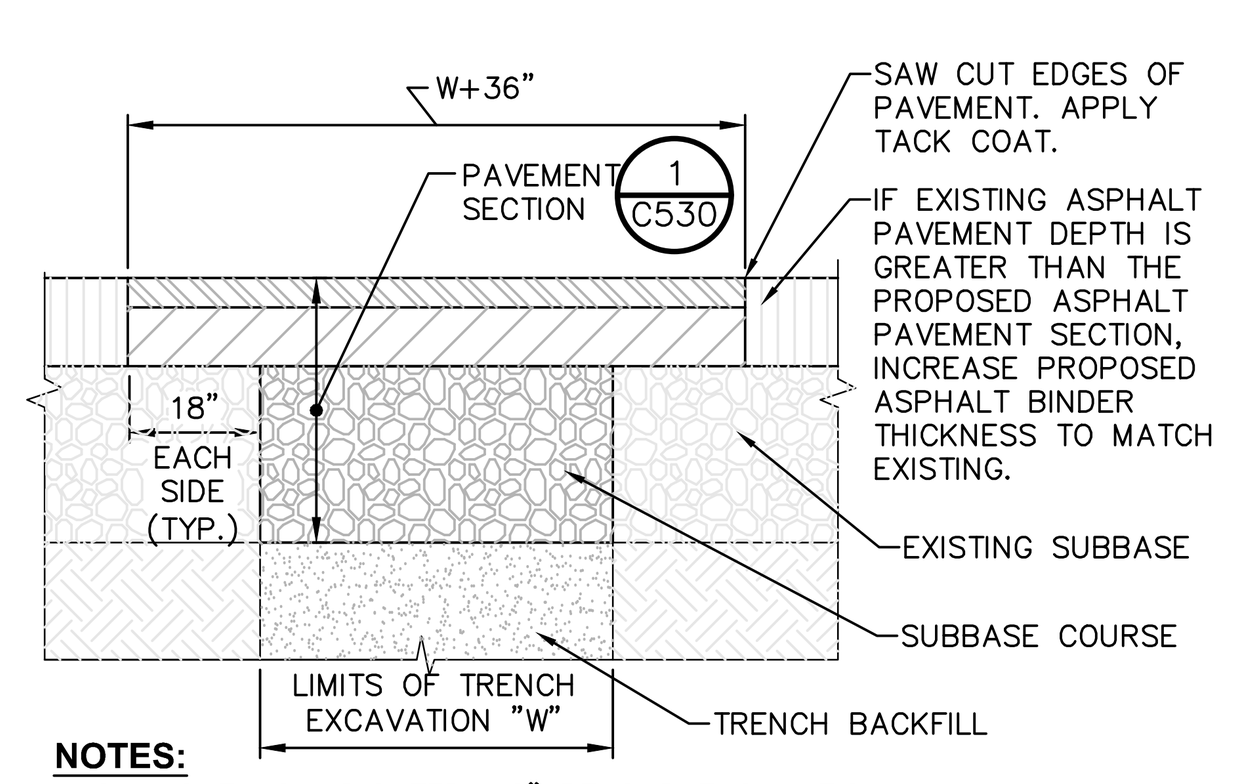

NOTES:
1. SAW CUT AS INDICATED, 18" BEYOND EXCAVATION.
2. FURNISH, PLACE, AND COMPACT SUBBASE.
3. TACK COAT IN ACCORDANCE WITH NYSDOT STANDARD SPEC.
4. FURNISH AND PLACE ASPHALT CONCRETE PAVEMENT AS SPECIFIED.

© 6 **TRENCH SURFACE RESTORATION IN ASPHALT PAVEMENT**
SCALE: NOT TO SCALE

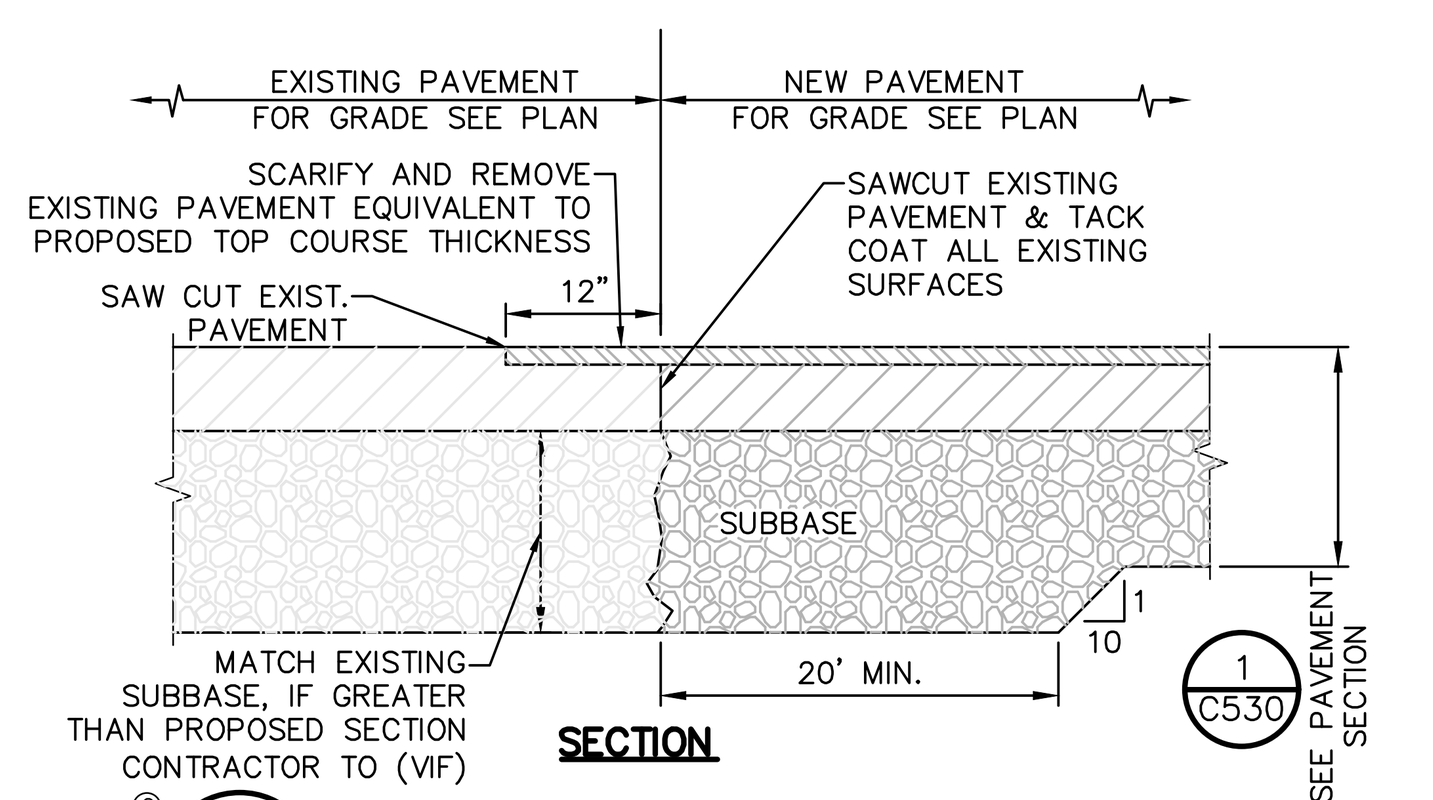

© 7 **PAVEMENT TRANSITION DETAIL**
SCALE: NOT TO SCALE

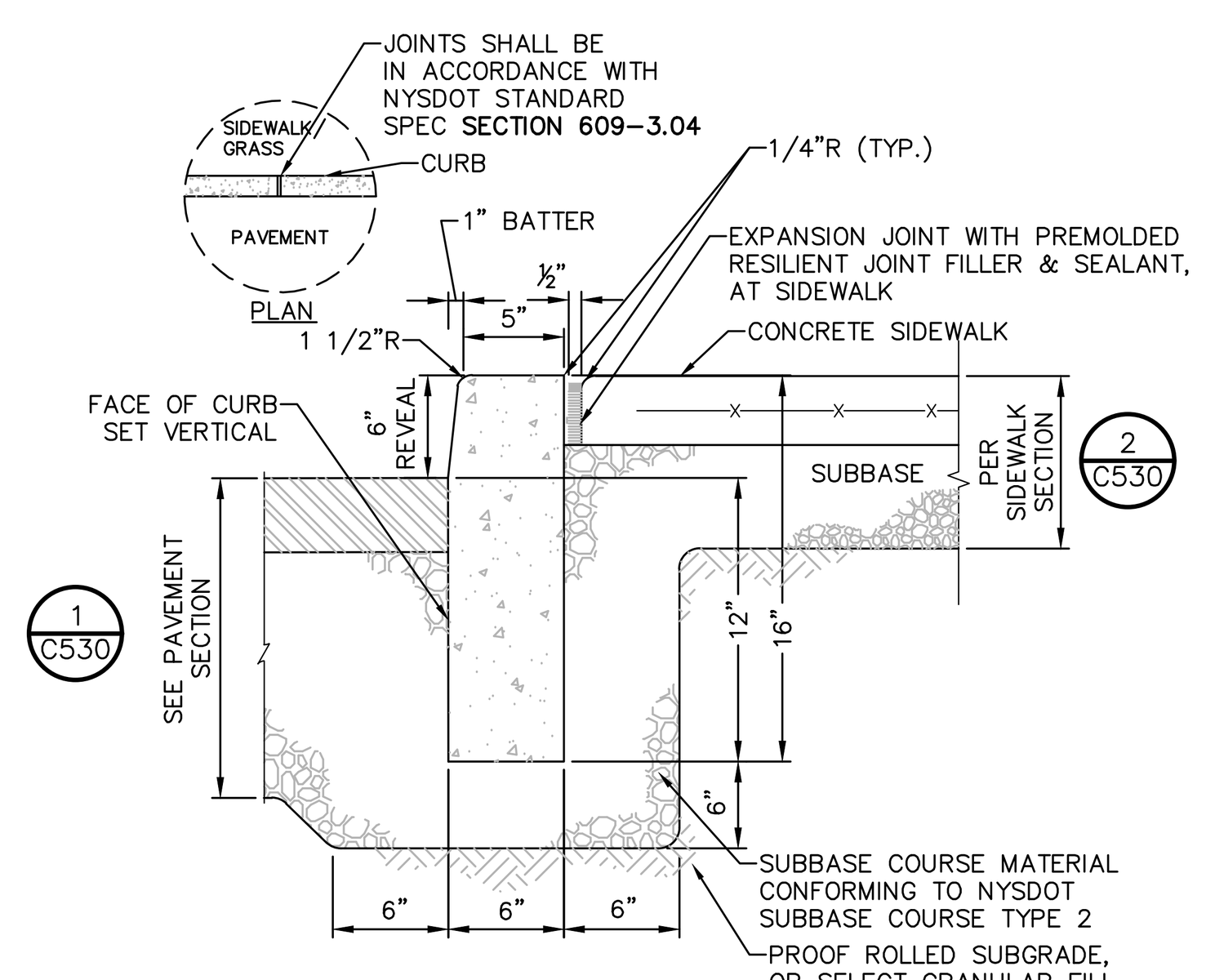

NOTES:
1. CONCRETE CURB SHALL BE INSTALLED IN ACCORDANCE WITH NYSDOT STANDARD SPECIFICATION **SECTION 609**.
2. PRECAST CONCRETE CURB MAY BE SUBSTITUTED, WHEN ALTERNATE CONSTRUCTION DETAILS ARE SUBMITTED BY THE CONTRACTOR AND APPROVED BY THE ENGINEER. ALTERNATE CURB SHALL BE INSTALLED IN ACCORDANCE WITH NYSDOT SPEC **SECTION 609**.

© 8 **CAST IN PLACE CONCRETE CURB AT SIDEWALK**
SCALE: NOT TO SCALE

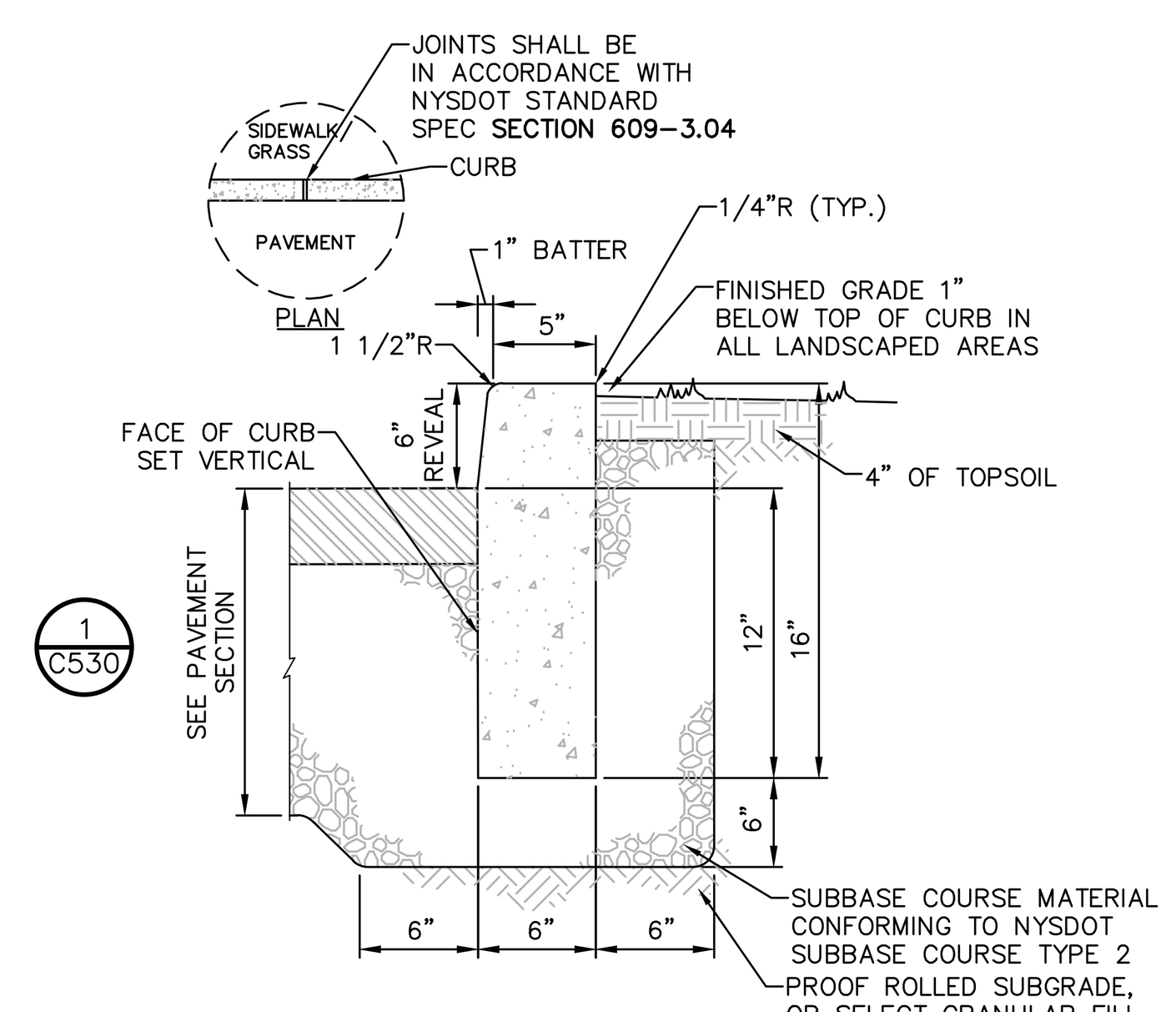

NOTES:
1. CONCRETE CURB SHALL BE INSTALLED IN ACCORDANCE WITH NYSDOT STANDARD SPECIFICATION **SECTION 609.**
2. PRECAST CONCRETE CURB MAY BE SUBSTITUTED, WHEN ALTERNATE CONSTRUCTION DETAILS ARE SUBMITTED BY THE CONTRACTOR AND APPROVED BY THE ENGINEER. ALTERNATE CURB SHALL BE INSTALLED IN ACCORDANCE WITH NYSDOT SPEC **SECTION 609**.

© 9 **CAST IN PLACE CONCRETE CURB**
SCALE: NOT TO SCALE

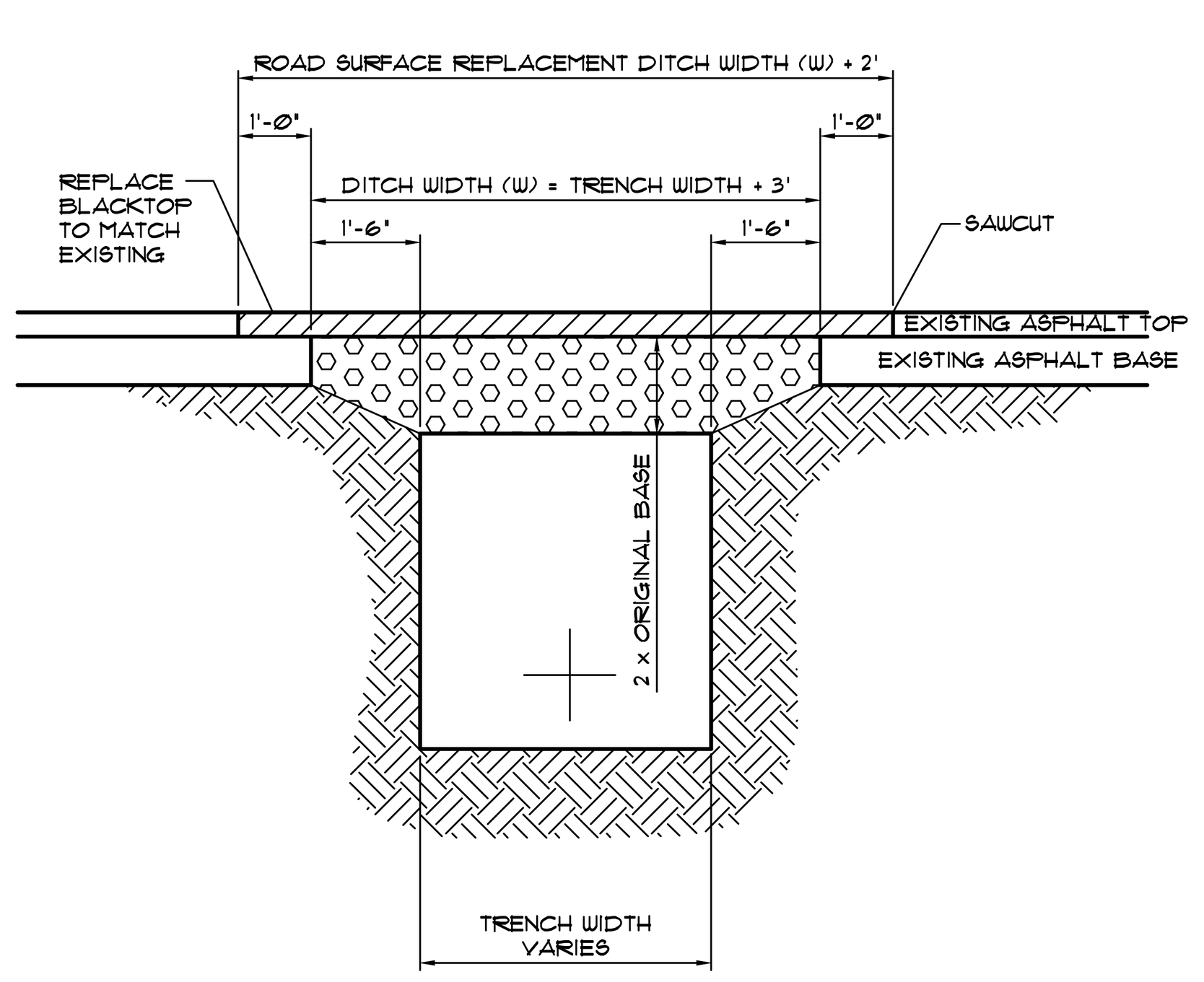

© 10 **CITY OF POUGHKEEPSIE FLEXIBLE PAVEMENT DETAIL AND TRENCHING LIMITS**
SCALE: NOT TO SCALE

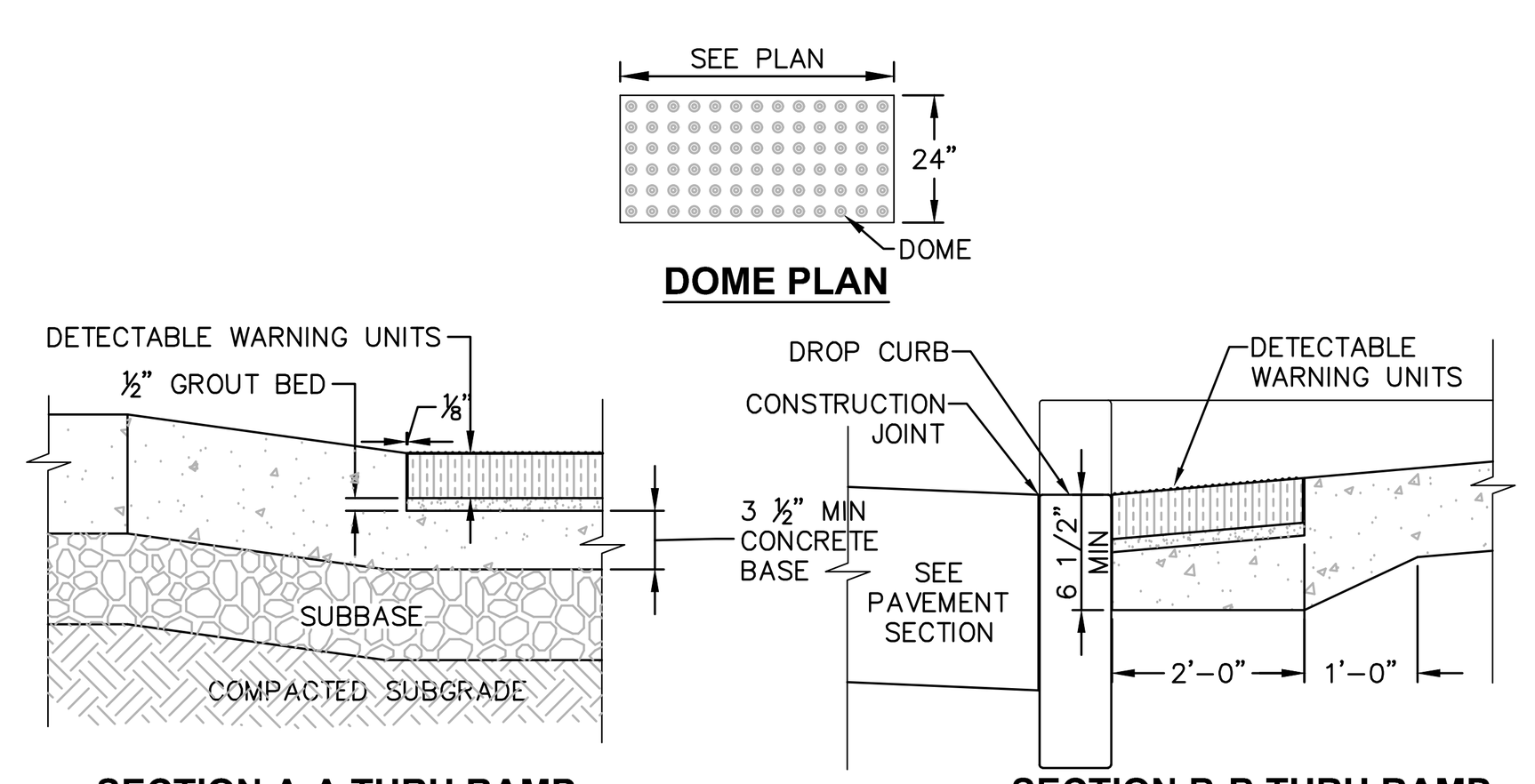

NOTES:
1. COORDINATE W/ OWNER FOR COLOR.
2. DETECTABLE WARNING UNIT SHALL BE ADA COMPLIANT, AND SHALL CONTRAST VISUALLY WITH ADJOINING SURFACES.
3. MATERIALS: UNIT SHALL BE 24-INCH DETECTABLE WARNING ADA PAVERS, DOME STRAIGHT ROW SPACING PATTERN ADA-2 OR ADA-3, ADA COMPLIANT WARNING PAVER AS MANUFACTURED BY WAUSAU TILE OR CAST IRON, CAST IN PLACE ADA COMPLIANT WARNING PLATE A MANUFACTURED BY TUFTILE OR EQUAL.

ALTERNATIVE NOTE 3: SEE SPECIFICATION SECTION 3XXXXXX FOR DETECTABLE WARNING ADA PAVERS.

© 11 **DETECTABLE WARNING UNITS FOR RAMPS**
SCALE: NOT TO SCALE

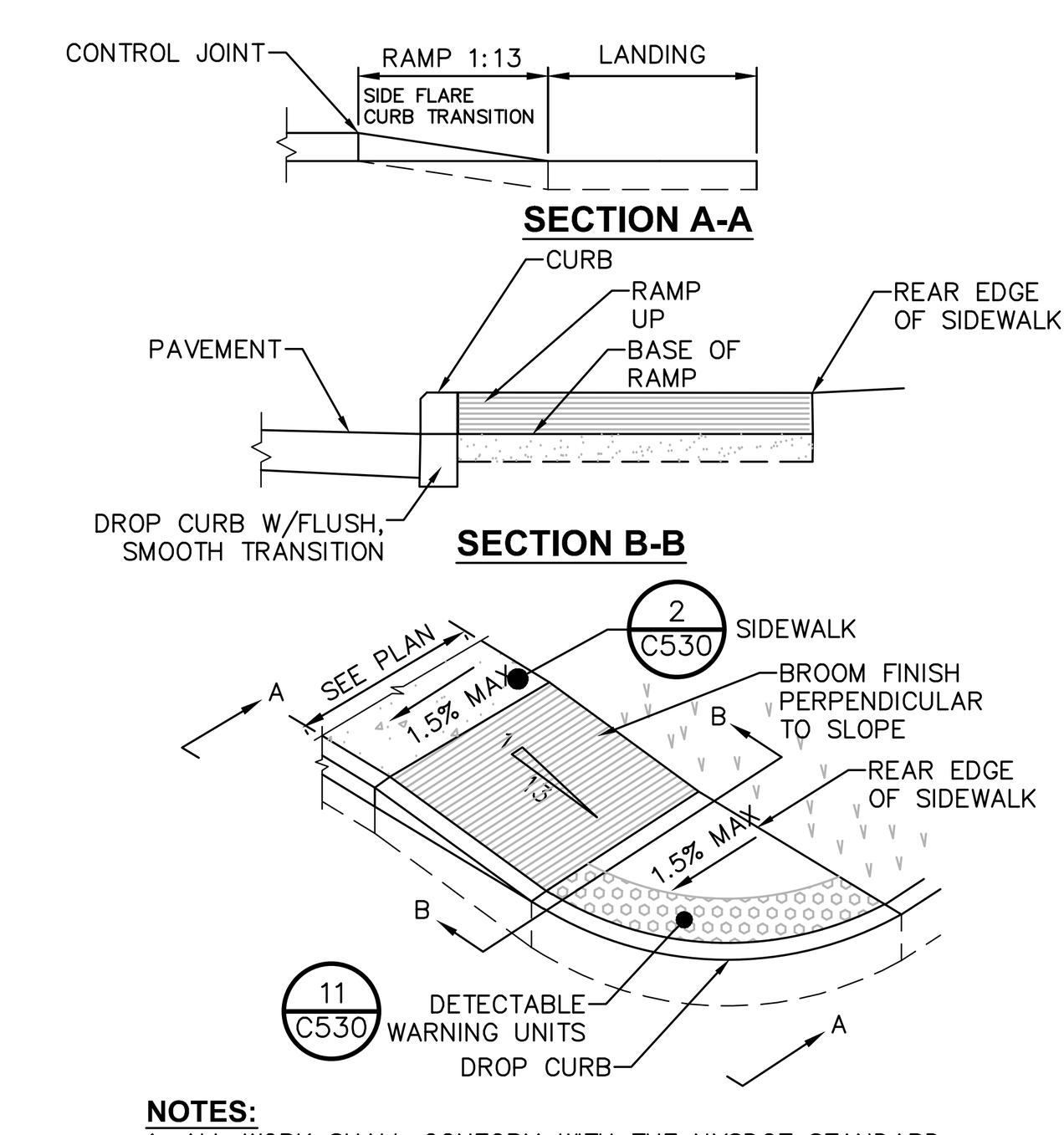

NOTES:
1. ALL WORK SHALL CONFORM WITH THE NYSDOT STANDARD SPECIFICATION FOR CONSTRUCTION AND MATERIALS DATED, **"CURRENT VERSION"**, AND ALL ADDENDA THERE TO; SPECIFICALLY **SECTION 608**– SIDEWALKS, DRIVEWAYS, AND BICYCLE PATHS.
2. SLOPE RAMP AND SIDE FLARES AS INDICATED IN THE PLANS OR AS ORDERED BY THE ENGINEER.
3. DETECTABLE WARNING UNITS SHALL BE PROVIDED ON ALL RAMPS IN ACCORDANCE W/ ADA REQUIREMENTS.

© 12 **PEDESTRIAN RAMP SECTION - DROP CURB**
SCALE: NOT TO SCALE

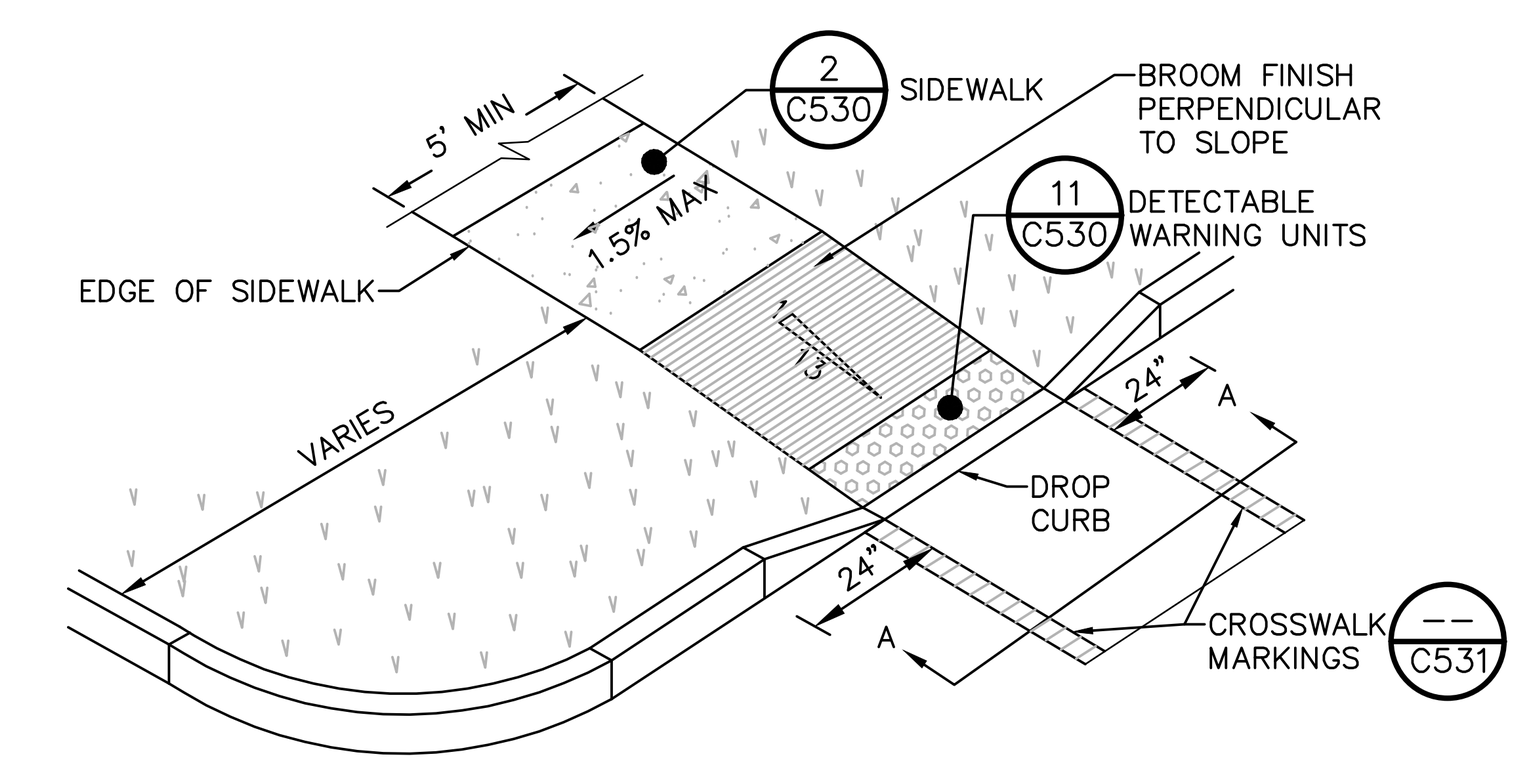

NOTES:
1. ALL WORK SHALL CONFORM WITH THE NYSDOT STANDARD SPECIFICATION FOR CONSTRUCTION AND MATERIALS DATED, **"CURRENT VERSION"**, AND ALL ADDENDA THERE TO; SPECIFICALLY **SECTION 608**– SIDEWALKS, DRIVEWAYS, AND BICYCLE PATHS.
2. SLOPE RAMP AND SIDE FLARES AS INDICATED IN THE PLANS OR AS ORDERED BY THE ENGINEER.
3. DETECTABLE WARNING UNITS SHALL BE PROVIDED ON ALL RAMPS IN ACCORDANCE W/ ADA REQUIREMENTS.

© 13 **PEDESTRIAN RAMP SECTION - DROP CURB**
SCALE: NOT TO SCALE

LaBella
Powered by partnership.
21 Fox Street
Poughkeepsie, NY 12601
845-454-3980
labellapc.com

NOT FOR CONSTRUCTION
EXP: ##/##/20## EXP: ##/##/20##

CERTIFICATE OF AUTHORIZATION NUMBER:
PROFESSIONAL ENGINEERING: 0021272
LAND SURVEYING: 0021271
GEOLOGICAL: 0021659

It is a violation of New York Education Law Art. 145 Sec. 7209 & Art. 147 Sec. 7307, for any person, unless acting under the direction of a licensed architect, professional engineer, or land surveyor, to alter an item in any way. If an item bearing the seal of an architect, engineer, or land surveyor is altered; the altering architect, engineer, or land surveyor shall affix to the item their seal and notation "altered by" followed by their signature and date of such alteration, and a specific description of the alteration.

© 2025 LaBella Associates

MASELO REALTY LLC
18 EASTVIEW ROAD
MONSEY, NY 10952

HIGHVIEW AT THE FALLKILL CREEK
CITY OF POUGHKEEPSIE
DUTCHESS COUNTY, NEW YORK

NO:	DATE:	DESCRIPTION:
Revisions		

PROJECT NUMBER: CZ81947.00
DRAWN BY: JRR
REVIEWED BY: KGA
ISSUED FOR: PLANNING BOARD REVIEW
DATE: 10/28/2025
DRAWING NAME: **SITE DETAILS 1**
DRAWING NUMBER: **C530**

Drawing Name: B:\GLOBAL\Legacy\Chazen\Projects\81900-81999\81947.00 - Highview II\DWG\01_C530-C531_81747-00_SITED.dwg
Xref's Attached: X-BORDER_81947-00_30x42
Date Printed: Oct 27, 2025, 4:25pm

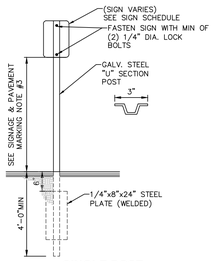

1 **SINGLE POST SIGN MOUNTING DETAIL**
SCALE: NOT TO SCALE

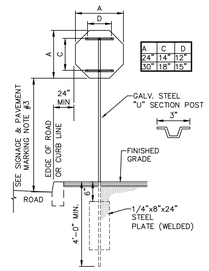

2 **SINGLE POST STOP SIGN MOUNTING DETAIL**
SCALE: NOT TO SCALE

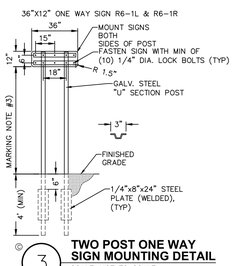

3 **TWO POST ONE WAY SIGN MOUNTING DETAIL**
SCALE: NOT TO SCALE

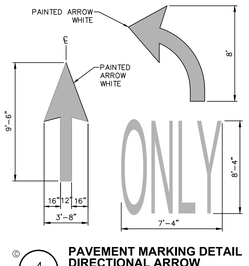

4 **PAVEMENT MARKING DETAIL DIRECTIONAL ARROW**
SCALE: NOT TO SCALE

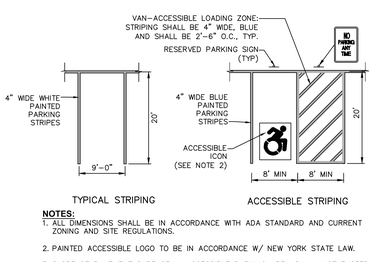

NOTES:
1. ALL DIMENSIONS SHALL BE IN ACCORDANCE WITH ADA STANDARD AND CURRENT ZONING AND SITE REGULATIONS.
2. PAINTED ACCESSIBLE LOGO TO BE IN ACCORDANCE W/ NEW YORK STATE LAW.
3. SLOPE OF PAVEMENT SURFACE IN ACCESSIBLE PARKING AREA SHALL NOT EXCEED 1.5% IN ANY DIRECTION.
4. SEE PLAN FOR ACTUAL LOCATION OF SIGNAGE

5 **PAVEMENT MARKING DETAIL PARKING STRIPING**
SCALE: NOT TO SCALE

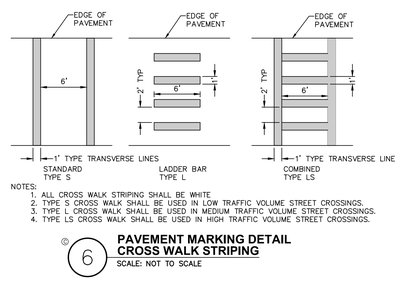

NOTES:
1. ALL CROSS WALK STRIPING SHALL BE WHITE
2. TYPE S CROSS WALK SHALL BE USED IN LOW TRAFFIC VOLUME STREET CROSSINGS.
3. TYPE L CROSS WALK SHALL BE USED IN MEDIUM TRAFFIC VOLUME STREET CROSSINGS.
4. TYPE LS CROSS WALK SHALL BE USED IN HIGH TRAFFIC VOLUME STREET CROSSINGS.

6 **PAVEMENT MARKING DETAIL CROSS WALK STRIPING**
SCALE: NOT TO SCALE

STRIPING NOTES:
1. ALL STRIPING SHALL CONFORM TO THE LATEST EDITION OF THE NYSDOT STANDARD SPECIFICATIONS, **SECTION 640** AND THE "NATIONAL MANUAL ON UNIFORM TRAFFIC CONTROL DEVICES" – **2009 EDITION** AND THE "NYS SUPPLEMENT."
2. STRIPE PAVEMENT AS INDICATED ON THE PLANS AND/OR IN ACCORDANCE WITH ALL APPLICABLE LOCAL, STATE AND FEDERAL REQUIREMENTS.
3. STRIPING WORK WILL BE REVIEWED AND ACCEPTED BY THE AUTHORITY HAVING JURISDICTION.
4. COLOR: DRIVE LANE DIVIDERS – WHITE OR AOBE
NO PARKING ZONE MARKINGS – WHITE OR AOBE
PARKING DIVIDERS – WHITE OR AOBE
WALKING LINES – WHITE OR AOBE
ACCESSIBLE PARKING LINES & SYMBOL – BLUE

SIGNAGE NOTES:
1. ALL SIGNS SHALL CONFORM TO THE LATEST EDITION OF THE NYSDOT STANDARD SPECIFICATIONS, **SECTION 645** AND THE "NATIONAL MANUAL ON UNIFORM TRAFFIC CONTROL DEVICES" – **2009 EDITION** AND THE "NYS SUPPLEMENT."
2. SIGN MOUNTING HEIGHT SHALL BE A MINIMUM OF 7', MINIMUM MOUNTING HEIGHT MAY BE ADJUSTED ONLY IN ACCORDANCE WITH PROVISIONS OUTLINED IN THE "NATIONAL MANUAL ON UNIFORM TRAFFIC CONTROL DEVICES" – **2009 EDITION** AND THE "NYS SUPPLEMENT."
3. SIGN POST SHALL BE IN ACCORDANCE W/ NYSDOT STANDARD SPECS **SECTION 730.**

MUTCD SIGN SCHEDULE

SIGN NO.	SIGN FACE	MUTCD NUMBER	MIN. SIZE	COLORS BCK GRND	COLORS LEGEND	MOUNTING
1	STOP	R1-1	30"x30"	RED	WHITE	2 C5.31
4	ONE WAY	R6-1L	36"x12"	BLACK	WHITE	3 C5.31
5	ONE WAY	R6-1R	36"x12"	BLACK	WHITE	3 C5.31
6		W11-2	24"x24"	YELLOW/ FYG	BLACK	1 C5.31
7		W16-7P	24"x12"	YELLOW/ FYG	BLACK	1 C5.31
9	DO NOT ENTER	R5-1	30"x30"	RED	WHITE	1 C5.31
10	RESERVED PARKING	NY R7-8D	12"x18"	WHITE/ BLUE	GREEN/ WHITE	1 C5.31
11	VAN ACCESSIBLE	R7-8P	12"x6"	WHITE	BLUE	1 C5.31
12	NO PARKING ANY TIME	R7-1	12"x18"	WHITE	RED	1 C5.31

7 **MUTCD SIGN SCHEDULE**
SCALE: NOT TO SCALE

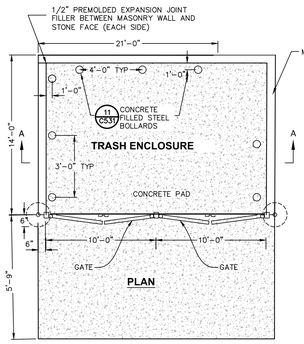

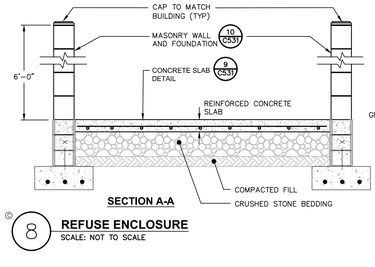

8 **REFUSE ENCLOSURE**
SCALE: NOT TO SCALE

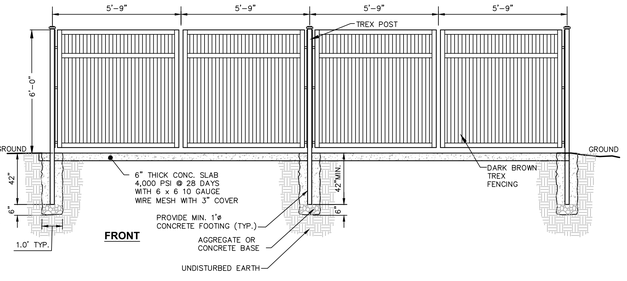

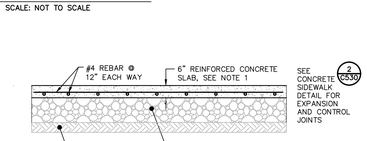

CONCRETE SLAB:
1. MATERIAL AND METHODS OF CONSTRUCTION SHALL BE IN CONFORMANCE WITH THE NEW YORK STATE DEPARTMENT OF TRANSPORTATION (NYSDOT) STANDARD SPECIFICATIONS FOR CONSTRUCTION AND MATERIALS, DATED MAY 1, 2008, AND ALL ADDENDA THERETO.
2. CONCRETE SHALL HAVE A MINIMUM COMPRESSION STRENGTH OF 4500 PSI @ 28 DAY AND SHALL BE PLACED IN ACCORDANCE WITH ACI SPECIFICATIONS AND ITS LATEST REVISION.
3. REINFORCING STEEL FOR CONCRETE SHALL CONFORM WITH SECTION 556 – REINFORCING STEEL FOR CONCRETE STRUCTURES OF THE ABOVE REFERENCED NYSDOT STANDARD SPECIFICATIONS AND AS SPECIFICALLY CALLED OUT IN THE DRAWINGS.
4. ALL EXPOSED SURFACED SHALL HAVE A BROOM TEXTURED FINISH & TOOLED EDGES. TOOL SHALL BE PROVIDE MAX 1–1/2" WIDE SMOOTH TROWEL FINISH AT JOINT.
5. EXPANSION JOINTS SHALL BE LOCATED A MAXIMUM OF 20' ON CENTER, OR AS INDICATED ON PLANS.
6. CONTROL JOINTS SHALL BE LOCATED A MAXIMUM OF 5' ON CENTER, OR AS INDICATED ON PLANS.
7. JOINTS SHALL NOT BE SAW CUT.
8. EXPOSED CONCRETE SURFACES SHALL BE TREATED WITH "SUREBOND"/"SAFEBOND" SB–7000 INTENSIFIER BRIGHT PROTECTOR AND SIDEWALK SEALER, OR EQUAL. RATE AND METHOD OF APPLICATION SHALL BE IN ACCORDANCE WITH MANUFACTURER'S RECOMMENDATIONS.
9. SUBBASE MATERIAL SHALL CONFORM WITH SECTION 304 OF THE ABOVE REFERENCED NYSDOT STANDARD.
10. WHERE IT IS NECESSARY TO PLACE FILL FOR PURPOSE OF BRINGING THE SUBGRADE ELEVATION UP TO A SPECIFIED GRADE, THE FILL MATERIAL PLACED SHALL BE IN ACCORDANCE WITH SECTION 203–EXCAVATION AND EMBANKMENT OF THE ABOVE REFERENCED NYSDOT STANDARD SPECIFICATIONS.

9 **CONCRETE SLAB**
SCALE: NOT TO SCALE

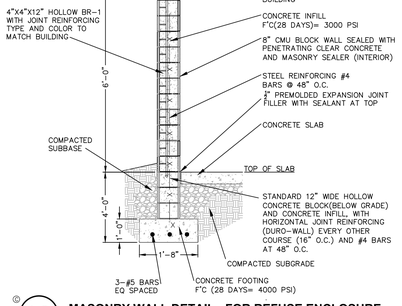

10 **MASONRY WALL DETAIL - FOR REFUSE ENCLOSURE**
SCALE: NOT TO SCALE

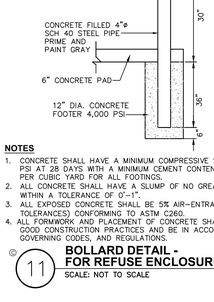

NOTES
1. CONCRETE SHALL HAVE A MINIMUM COMPRESSIVE STRENGTH OF 4,000 PSI AT 28 DAYS WITH A MINIMUM CEMENT CONTENT OF 600 POUNDS PER CUBIC YARD FOR ALL FOOTINGS.
2. ALL CONCRETE SHALL HAVE A SLUMP OF NO GREATER THAN 3"–5" TO WITHIN A TOLERANCE OF 0"–1".
3. ALL EXPOSED CONCRETE SHALL BE 5% AIR–ENTRAINED (WITHIN 1% TOLERANCES) CONFORMING TO ASTM C260.
4. ALL FORMWORK AND PLACEMENT OF CONCRETE SHALL COMPLY WITH GOOD CONSTRUCTION PRACTICES AND BE IN ACCORDANCE WITH GOVERNING CODES, AND REGULATIONS.

11 **BOLLARD DETAIL - FOR REFUSE ENCLOSURE**
SCALE: NOT TO SCALE

LaBella Powered by partnership.
21 Fox Street
Poughkeepsie, NY 12601
845-454-3980
labellapc.com

NOT FOR CONSTRUCTION
EXP: ##/##/20##
EXP: ##/##/20##

CERTIFICATE OF AUTHORIZATION NUMBER:
PROFESSIONAL ENGINEERING: 0021272
LAND SURVEYING: 0021271
GEOLOGICAL: 0021659

It is a violation of New York Education Law Art. 145 Sec. 7209 & Art. 147 Sec. 7307, for any person, unless acting under the direction of a licensed architect, professional engineer, or land surveyor, to alter an item in any way. If an item bearing the seal of an architect, engineer, or land surveyor is altered; the altering architect, engineer, or land surveyor shall affix to the item their seal and notation "altered by" followed by their signature and date of such alteration, and a specific description of the alteration.

© 2025 LaBella Associates

MASELO REALTY LLC
18 EASTVIEW ROAD
MONSEY, NY 10952

HIGHVIEW AT THE FALLKILL CREEK
CITY OF POUGHKEEPSIE
DUTCHESS COUNTY, NEW YORK

NO:	DATE:	DESCRIPTION:
Revisions		

PROJECT NUMBER: CZ81947.00
DRAWN BY: JRR
REVIEWED BY: KGA
ISSUED FOR: PLANNING BOARD REVIEW
DATE: 10/28/2025
DRAWING NAME:

SITE DETAILS 2

DRAWING NUMBER:

C531

Drawing Name: B:\GLOBAL\Legacy\Chazen\Projects\81900-81999\81947.00 - Highview II\DWG\01_CSD\C531_81747-00_SITED.dwg
Xref's Attached: X-BORDER_81H1-00_3in42
Date Plotted: 10/27/2025, 4:05pm

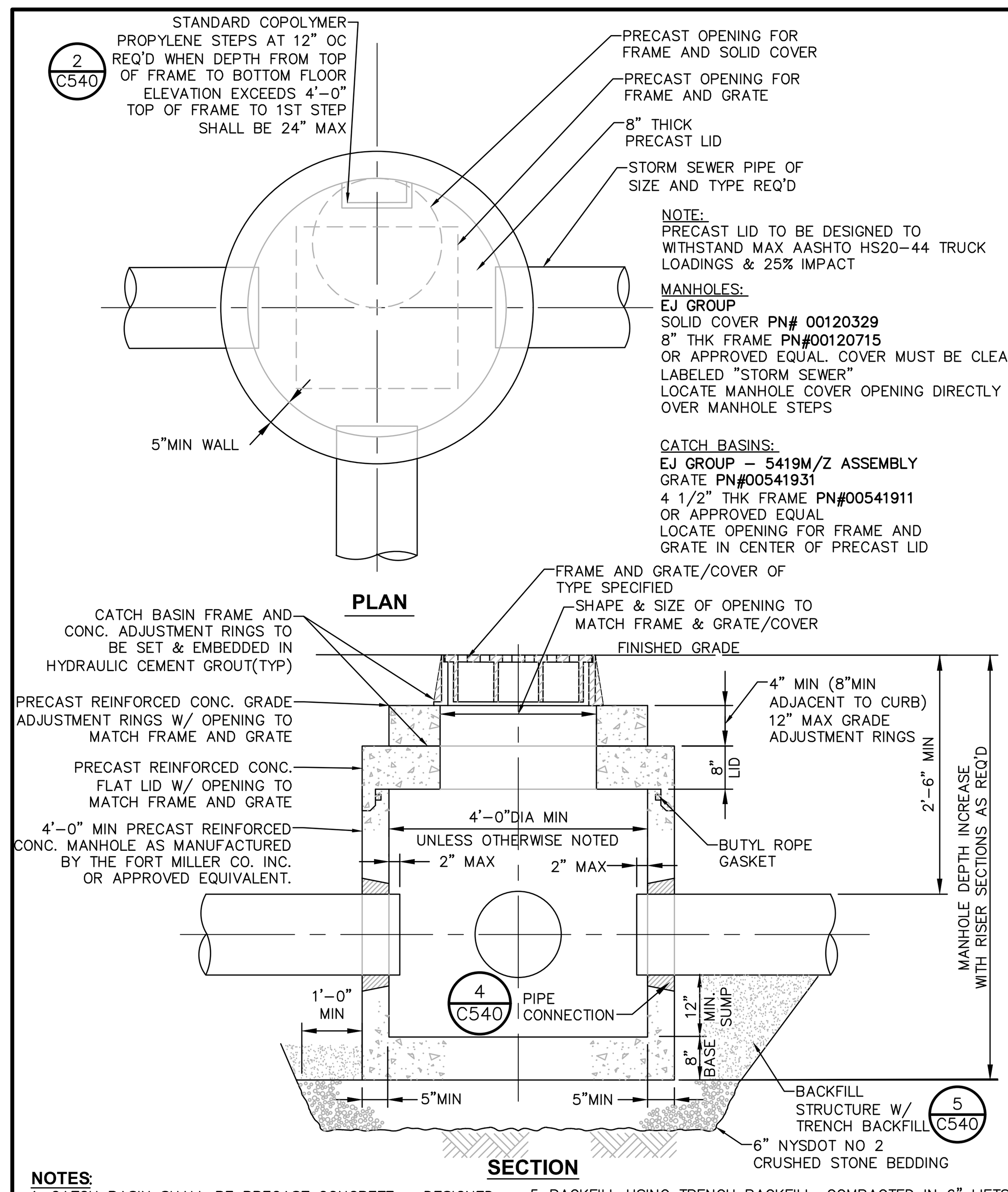

NOTES:
1. CATCH BASIN SHALL BE PRECAST CONCRETE. DESIGNED FOR HS20-44 VEHICULAR LOADING AND 25% IMPACT.
2. FRAME AND COVER SHALL BE DESIGNED FOR HS20-44 VEHICULAR LOADING & 25% IMPACT.
3. CONCRETE CATCH BASIN LID CLEAR OPENING DIMENSION MUST MATCH FRAME AND GRATE CLEAR OPENING DIMENSION.
4. CATCH BASINS HAVING A DEPTH GREATER THAN 48" FROM FINISHED SURFACE TO THE FLOOR OF THE CONCRETE BASE SHALL BE PROVIDED WITH STEPS.
5. BACKFILL USING TRENCH BACKFILL, COMPACTED IN 6" LIFTS.
6. SUMPS FOR CATCH BASINS SHALL BE 12".
7. ECCENTRIC CONE TOP CAN BE USED FOR MANHOLES DEPTH GREATER THAN 7 FEET.
8. SEE CHART FOR REQUIRED MANHOLES / CATCH BASINS DIAMETERS.
9. ALL PRECAST CONSTRUCTION IN ACCORDANCE W/ASTM C478

© 1 **PRECAST CONCRETE CATCH BASIN/MANHOLE DETAIL**
SCALE: NOT TO SCALE

ACCEPTABLE MANHOLE STEPS

MANUFACTURER	PATTERN NUMBER	"A" STEP WIDTH	"B" LEG LENGTH	"C" RUNG CLEAR	"D" EMBED-MENT	"E" RUNG CLEAR
M.A. INDUSTRIES INC*	PS2-PF	14 3/4	9 1/4	13 3/4	3 3/8	5 7/8
M.A. INDUSTRIES INC*	PS2-PFS	14 3/4	8 1/4	13 3/4	3 3/8	4 7/8

* OR EQUIVALENT
MH STEP DESIGN AND INSTALLATION SHALL COMPLY WITH ALL OSHA REGULATIONS

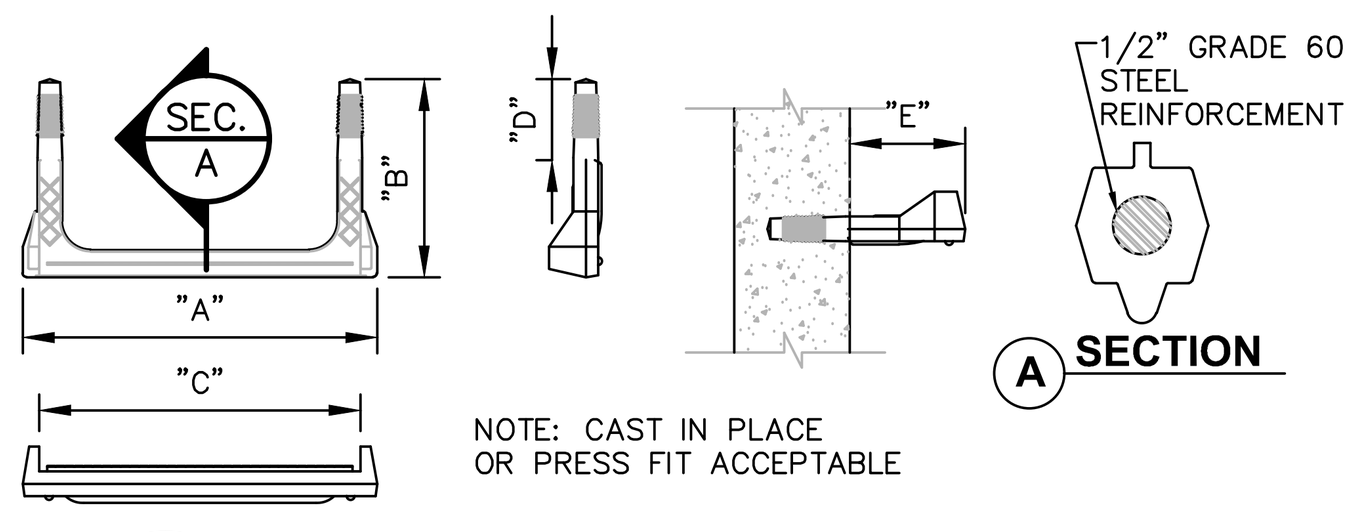

© 2 **COPOLYMER POLYPROPYLENE MH STEP**
SCALE: NOT TO SCALE

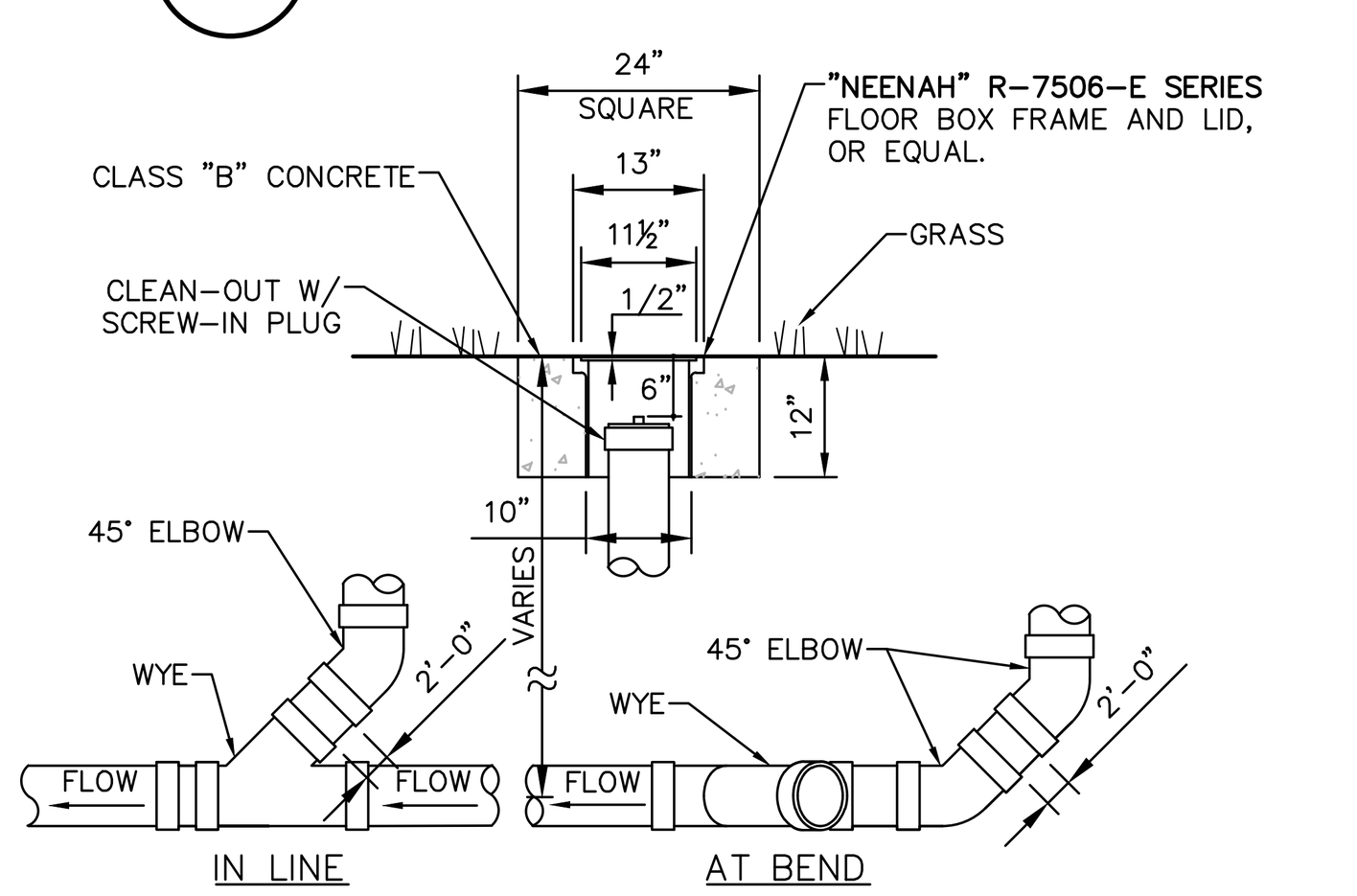

NOTES:
1. SEWER PIPE FITTINGS TO BE ASTM D-3033 OR D-3034 SDR-35.
2. TO BE USED FOR GRAVITY PORTION OF SANITARY SYSTEM AS WELL AS THE STORM ROOF DRAINAGE SYSTEM.

© 3 **CLEAN OUT - NON TRAFFIC AREAS**
SCALE: NOT TO SCALE

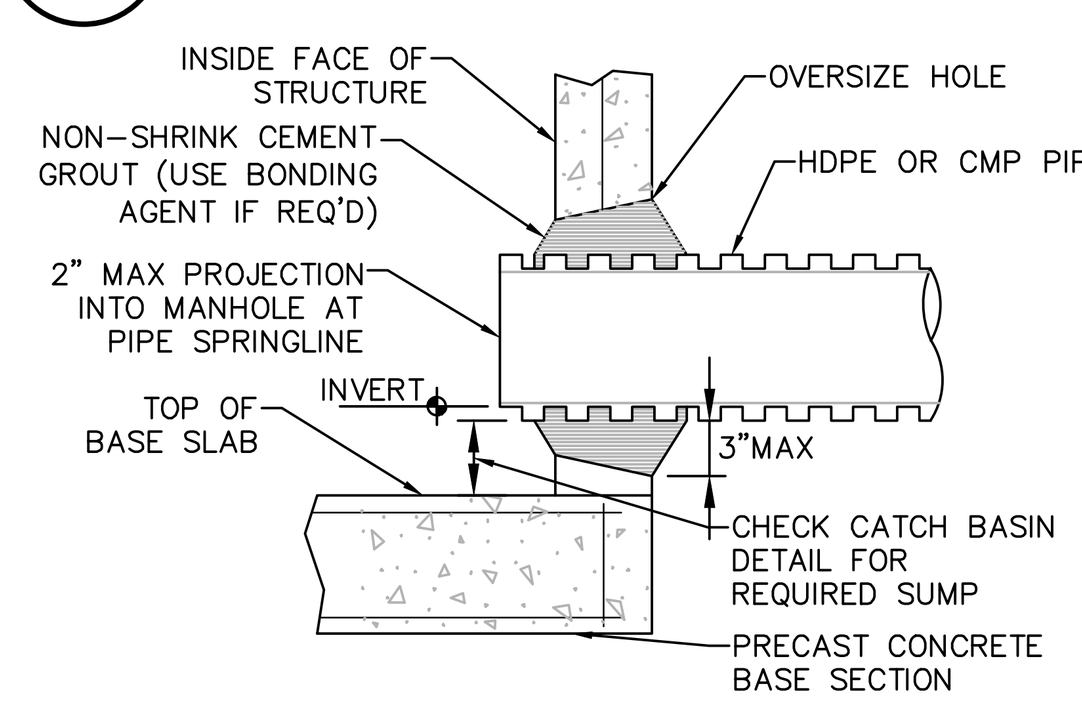

© 4 **PIPE CONNECTION TO DRAINAGE STRUCTURE- CMP OR HDPE CEMENT GROUT SEAL JOINT**
SCALE: NOT TO SCALE

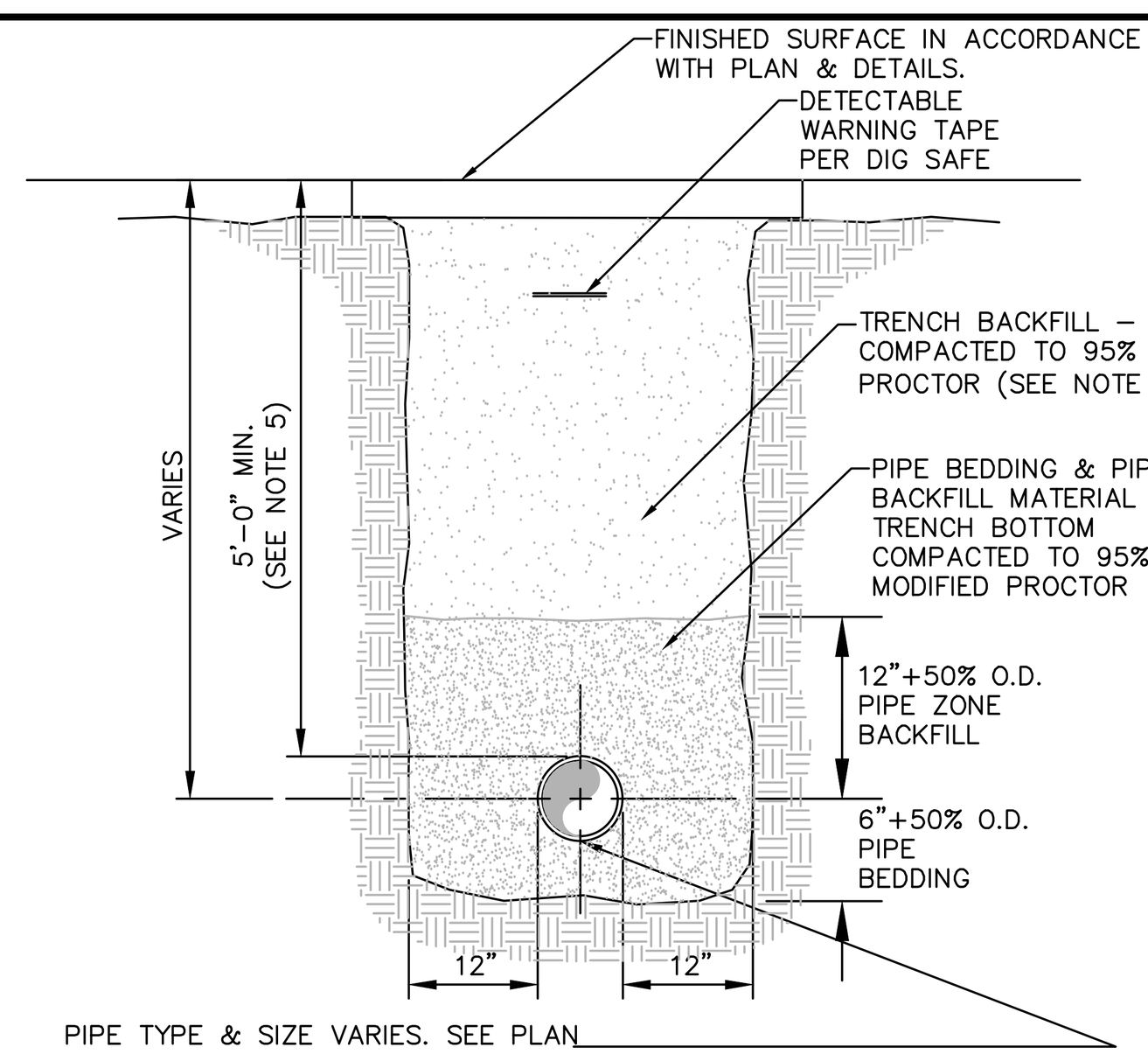

NOTES:
1. PIPE BEDDING & PIPE ZONE BACKFILL SHALL BE A NATURAL RUN-OF-BANK (R.O.B.) SAND OR A MIXTURE OF CRUSHED STONE AND GRAVEL, FREE OF SOFT, NONDURABLE PARTICLES, ORGANIC MATERIALS AND ELONGATED PARTICLES, AND SHALL BE WELL GRADED FROM FINE TO COARSE PARTICLES. BEDDING GRADATIONS SHALL BE APPROVED BY THE ENGINEER AND SHALL MEET THE FOLLOWING GRADATION REQUIREMENTS:

SIEVE DESIGNATION	% PASSING
3/4"	100%
NO. 40	0–70%
NO. 200	0–10%

2. TRENCH BACKFILL SHALL BE A NATURAL RUN-OF-BANK (R.O.B.) OR PROCESSED GRAVEL, OR EXCAVATED MATERIAL FREE OF SOFT, NONDURABLE PARTICLES, ORGANIC MATERIALS AND ELONGATED PARTICLES, AND SHALL BE WELL GRADED FROM FINE TO COARSE PARTICLES. TRENCH BACKFILL GRADATIONS SHALL BE APPROVED BY THE ENGINEER AND SHALL MEET THE FOLLOWING GRADATION REQUIREMENTS:

SIEVE DESIGNATION	% PASSING
4"	100%
NO. 40	0–70%
NO. 200	0–10%

IN NON-TRAFFIC UNPAVED AREAS TRENCH BACKFILL CAN BE MATERIALS EXCAVATED FROM THE TRENCH AS APPROVED BY THE ENGINEER AND COMPACTED TO 90% MODIFIED PROCTOR.

3. INSTALL CONTINUOUS DETECTABLE MARKING TAPE DURING BACKFILLING OF TRENCH FOR UNDERGROUND PIPING. LOCATE TAPE 12" BELOW FINISHED GRADE, DIRECTLY OVER PIPING, EXCEPT 6" BELOW SUBGRADE UNDER PAVEMENTS & SLAB.
4. TRENCHING SHALL BE IMPLEMENTED IN ACCORDANCE WITH O.S.H.A. STANDARDS.
5. 5'-0" MIN COVER SHALL BE APPLIED TO WATER MAIN OR SANITARY SEWER FORCE MAINS ONLY.

© 5 **PIPE TRENCH DETAIL (TYPICAL)**
SCALE: NOT TO SCALE

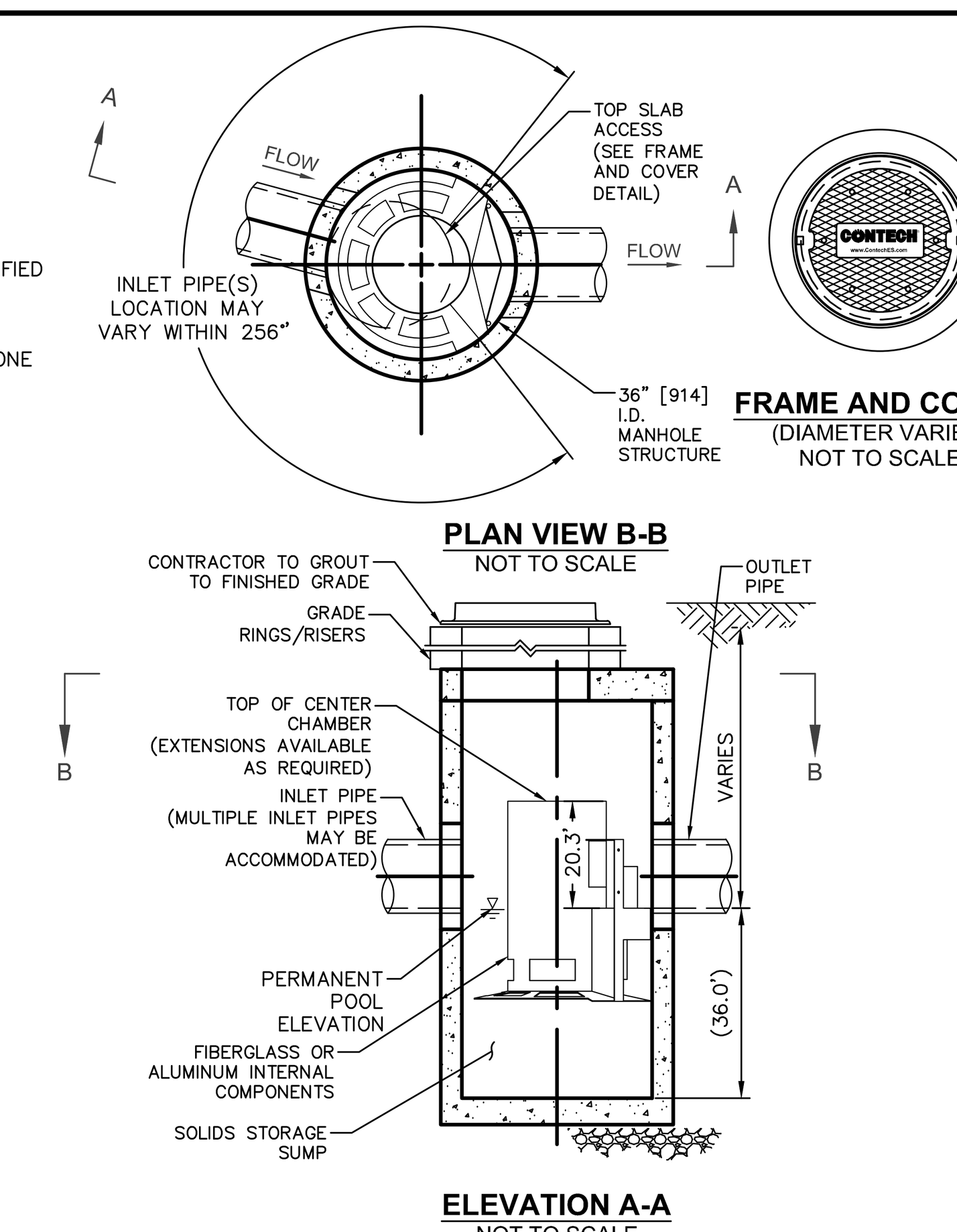

GENERAL NOTES
1. CONTECH TO PROVIDE ALL MATERIALS UNLESS NOTED OTHERWISE.
2. FOR SITE SPECIFIC DRAWINGS WITH DETAILED STRUCTURE DIMENSIONS AND WEIGHT, PLEASE CONTACT YOUR CONTECH ENGINEERED SOLUTIONS LLC REPRESENTATIVE. www.ContechES.com
3. CASCADE SEPARATOR WATER QUALITY STRUCTURE SHALL BE IN ACCORDANCE WITH ALL DESIGN DATA AND INFORMATION CONTAINED IN THIS DRAWING. CONTRACTOR TO CONFIRM STRUCTURE MEETS REQUIREMENTS OF PROJECT.
4. CASCADE SEPARATOR STRUCTURE SHALL MEET AASHTO HS20 LOAD RATING, ASSUMING EARTH COVER OF 0' - 2' [610], AND GROUNDWATER ELEVATION AT, OR BELOW, THE OUTLET PIPE INVERT ELEVATION. ENGINEER OF RECORD TO CONFIRM ACTUAL GROUNDWATER ELEVATION. CASTINGS SHALL MEET AASHTO M306 AND BE CAST WITH THE CONTECH LOGO.
5. CASCADE SEPARATOR STRUCTURE SHALL BE PRECAST CONCRETE CONFORMING TO ASTM C478 AND AASHTO LOAD FACTOR DESIGN METHOD.
6. ALTERNATE UNITS ARE SHOWN IN MILLIMETERS [mm].

INSTALLATION NOTES
A. ANY SUB-BASE, BACKFILL DEPTH, AND/OR ANTI-FLOTATION PROVISIONS ARE SITE-SPECIFIC DESIGN CONSIDERATIONS AND SHALL BE SPECIFIED BY ENGINEER OF RECORD.
B. CONTRACTOR TO PROVIDE EQUIPMENT WITH SUFFICIENT LIFTING AND REACH CAPACITY TO LIFT AND SET THE CASCADE SEPARATOR MANHOLE STRUCTURE.
C. CONTRACTOR TO INSTALL JOINT SEALANT BETWEEN ALL STRUCTURE SECTIONS AND ASSEMBLE STRUCTURE.
D. CONTRACTOR TO PROVIDE, INSTALL, AND GROUT INLET AND OUTLET PIPE(S). MATCH PIPE INVERTS WITH ELEVATIONS SHOWN. ALL PIPE CENTERLINES TO MATCH PIPE OPENING CENTERLINES.
E. CONTRACTOR TO TAKE APPROPRIATE MEASURES TO ASSURE UNIT IS WATER TIGHT, HOLDING WATER TO FLOWLINE INVERT MINIMUM. IT IS SUGGESTED THAT ALL JOINTS BELOW PIPE INVERTS ARE GROUTED.

© 6 **CONTECH CASCADE CS-3 HYDRODYNAMIC SEPARATOR**
SCALE: NOT TO SCALE

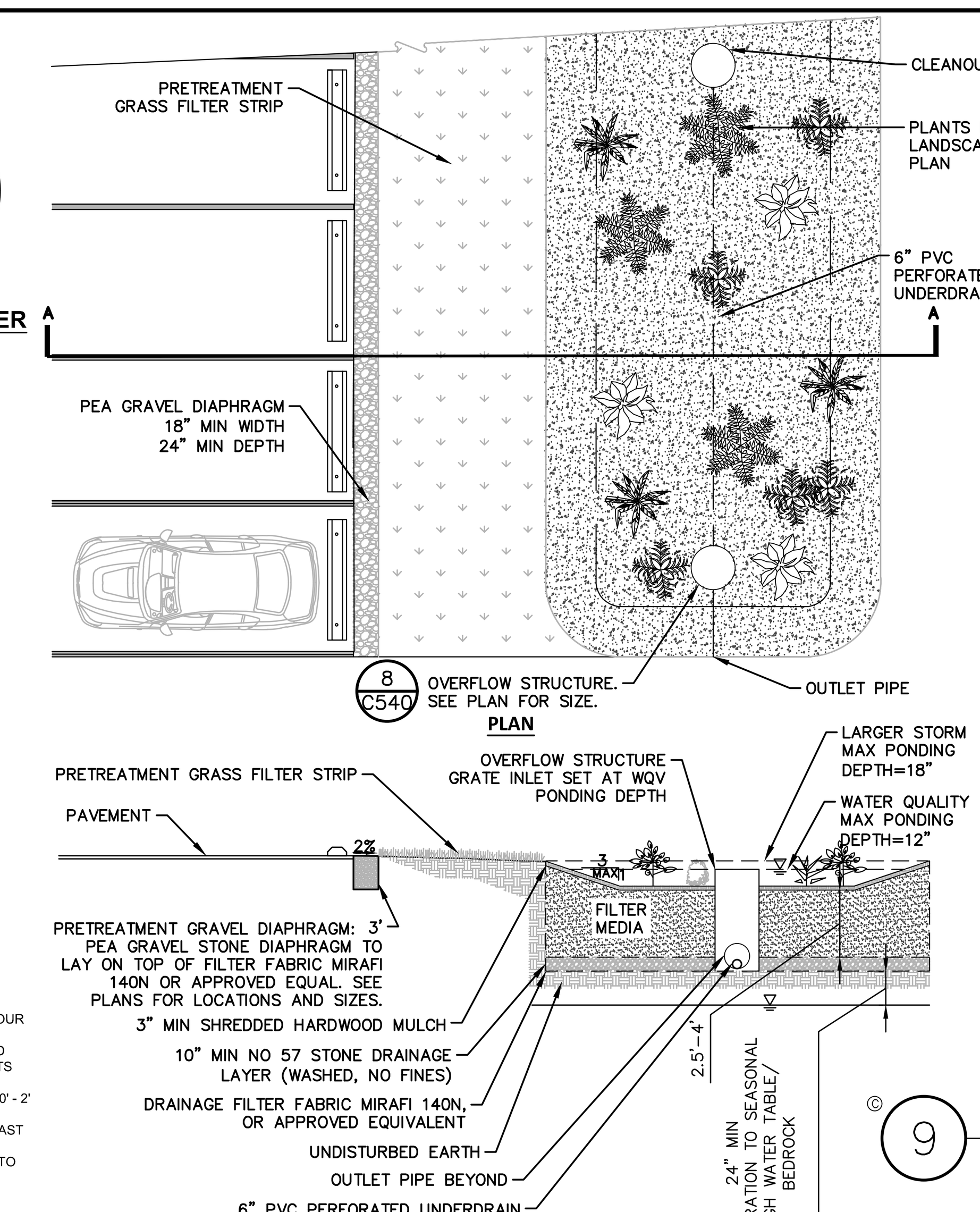

NOTES:
1. SOIL COMPOSITION (TO BE DEMONSTRATED BY CONTRACTOR):
35–60% SAND*
30–55% SILT
10–25% CLAY
SOIL WILL BE FREE OF STONES, STUMPS, ROOTS, OR OTHER WOODY MATERIAL OVER 1" IN DIAMETER. PLACE PLANTING SOIL IN 12" LIFTS, LOOSELY COMPACTED (USE LIGHT EQUIPMENT SUCH AS COMPACT LOADER OR DOZER/LOADER WITH MARSH TRACKS). DO NOT USE HEAVY EQUIPMENT WITHIN BIORETENTION AREAS. CONTRACTOR TO DEMONSTRATE: THE SOIL SHALL HAVE A PERMEABILITY OF AT LEAST 0.5 INCH PER HOUR.

* SAND SUBSTITUTION SUCH AS DIABASE, GRAYSTONE #10, OR ROCK DUST ARE NOT ACCEPTABLE. NO CALCIUM CARBONATE OR DOLOMITIC SAND SUBSTITUTIONS ARE ACCEPTABLE.

2. RIVER STONE; SHALL CONFORM TO NYSDOT SECTION 620-29
3. CONTRACTOR SHALL DEMONSTRATE: SOIL FOR EACH BIORETENTION AREA SHALL MEET THE FOLLOWING CRITERIA:

PH RANGE**	5.2 – 7.0
ORGANIC MATTER	1.5–4%
MAGNESIUM	35 LBS/ACRE
PHOSPHOROUS	75 LBS/ACRE
POTASSIUM	85 LBS/ACRE
SOLUBLE SALTS	NOT TO EXCEED 500 PPM

** IF PH FALLS OUT OF ACCEPTABLE RANGE, PH OF SOIL MAY BE MODIFIED WITH LIME (HIGHER PH), OR WITH WITH IRON SULFATE PLUS SULFUR (LOWER PH).

4. BIORETENTION AREA TO BE SURROUNDED WITH SILT FENCE DURING CONSTRUCTION. ONCE UPSTREAM AREA IS STABILIZED, SILT FENCE TO BE REMOVED AS APPROVED BY PROJECT ENGINEER.

© 9 **FILTRATION BIORETENTION (F-5)**
SCALE: NTS

NYLOPLAST 18" DRAIN BASIN:

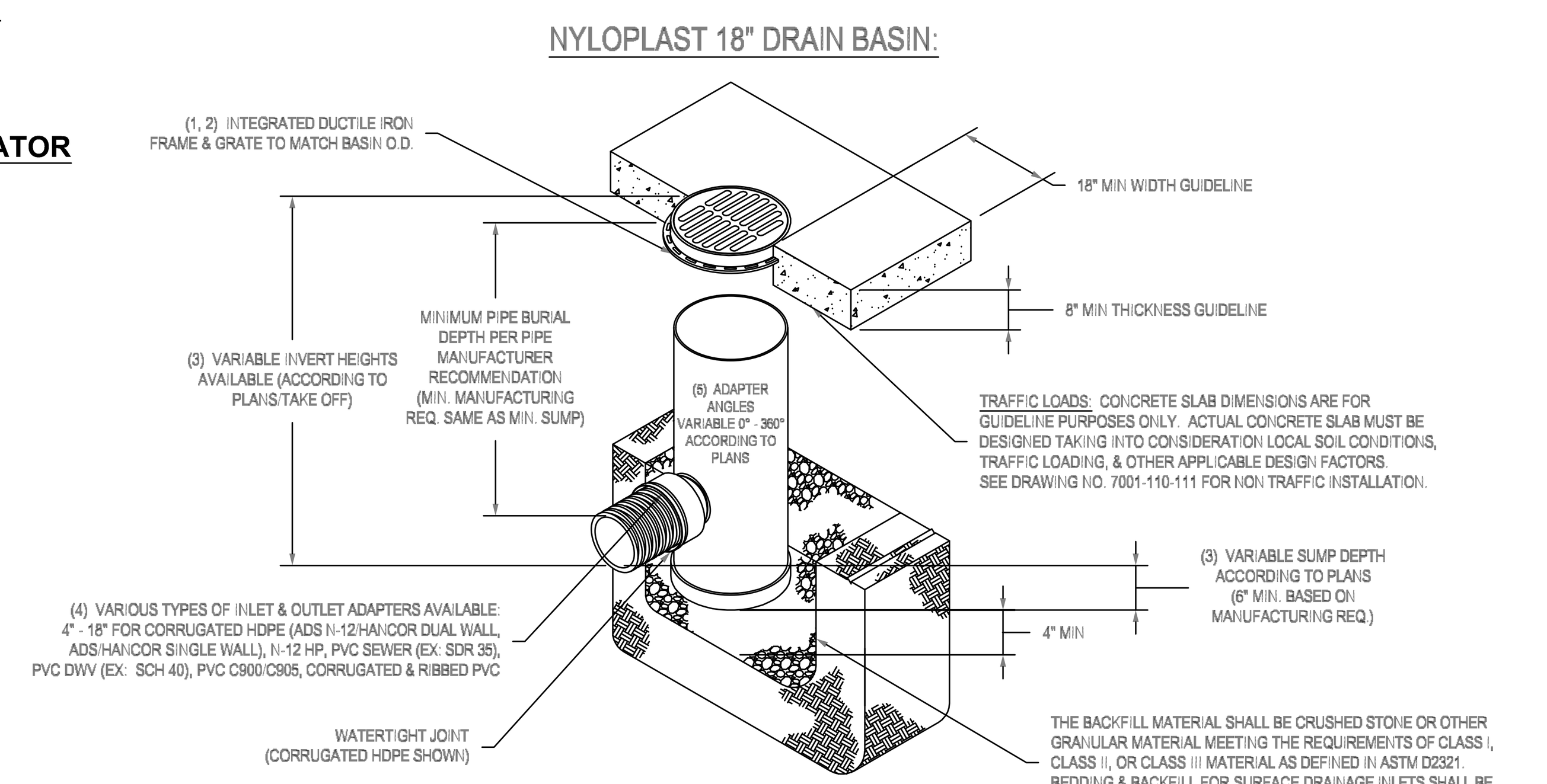

1 - GRATES/SOLID COVER SHALL BE DUCTILE IRON PER ASTM A536 GRADE 70-50-05.
2 - FRAMES SHALL BE DUCTILE IRON PER ASTM A536 GRADE 70-50-05.
3 - DRAIN BASIN TO BE CUSTOM MANUFACTURED ACCORDING TO PLAN DETAILS. RISERS ARE NEEDED FOR BASINS OVER 84" DUE TO SHIPPING RESTRICTIONS. SEE DRAWING NO. 7001-110-065.
4 - DRAINAGE CONNECTION STUB JOINT TIGHTNESS SHALL CONFORM TO ASTM D3212 FOR CORRUGATED HDPE (ADS N-12/HANCOR DUAL WALL), N-12 HP, & PVC SEWER.
5 - ADAPTERS CAN BE MOUNTED ON ANY ANGLE 0° TO 360°. TO DETERMINE MINIMUM ANGLE BETWEEN ADAPTERS SEE DRAWING NO. 7001-110-012.

© 16 **18" NYLOPLAST DRAIN BASIN DETAIL**
SCALE: NOT TO SCALE

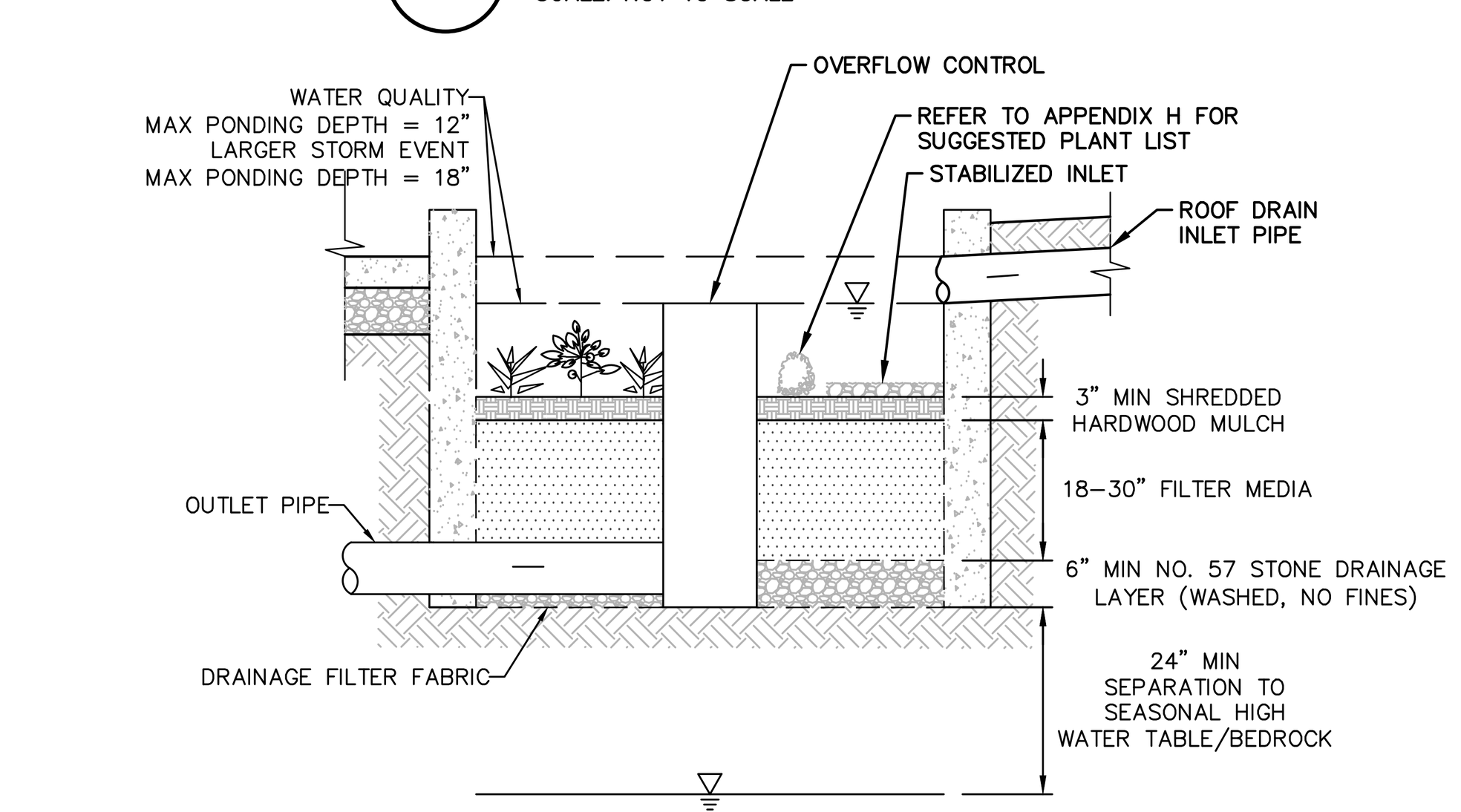

INFILTRATION STORMWATER PLANTER SECTION VIEW

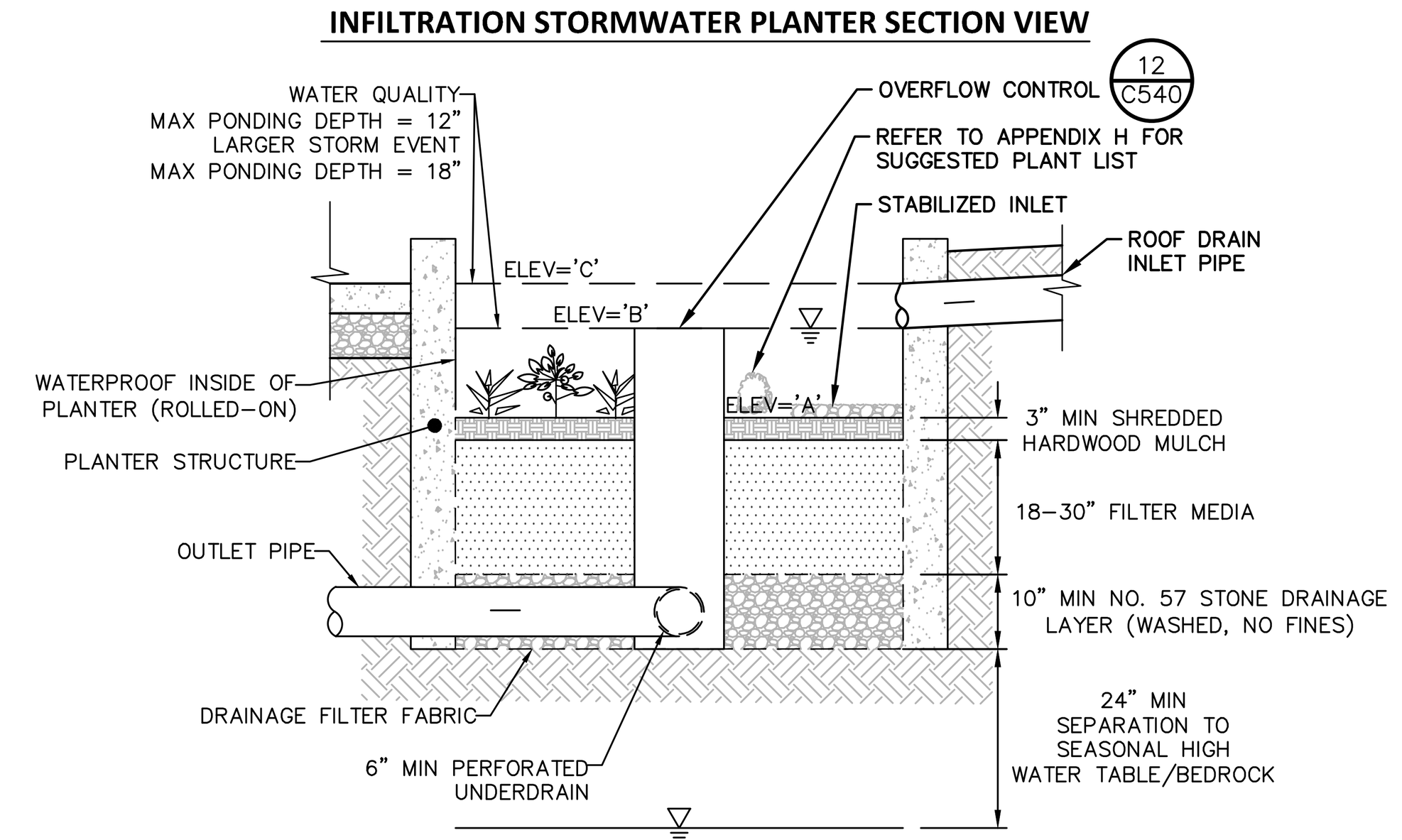

FILTRATION STORMWATER PLANTER SECTION VIEW

NOTES:
1. SANDY LOAM TOPSOIL SHALL HAVE AN INFILTRATION RATE OF 2 INCHES PER HOUR AND 5 INCHES AN HOUR FOR SAND AND GRAVEL COURSE.
2. SOIL COMPACTION MUST BE NO GREATER THAN 85% IN THE PLANTER.
3. THE GROWING MEDIA SHOULD BE UNIFORM MIXTURE OF 70% SAND (100% PASSING THE 1-INCH SIEVE AND 5% PASSING THE NO. 200 SIEVE) AND 30% TOPSOIL WITH AN AVERAGE OF 5% ORGANIC MATERIAL, SUCH AS COMPOST OR PEAT, FREE OF STONES, ROOTS AND WOODY DEBRIS AND ANIMAL WASTE.
4. DRAINAGE LAYER SHALL BE CLEAN SAND WITH 100% PASSING THE 1-INCH SIEVE AND 5% PASSING THE NO. 200 SIEVE.
5. SEE LANDSCAPE PLAN FOR PROPOSED PLANTING SCHEDULES.

PLANTER ELEVATION

BUILDING PLANTER	ELEVATIONS 'A' ELEV	'B' ELEV	'C' ELEV
PLANTER -1	195.0'	196.0'	196.5'
PLANTER -2	193.3'	194.3'	194.8'

© 8 **STORMWATER PLANTER (RR-7)**
SCALE: NTS

TYPICAL HDPE END SECTION

PIPE DIA.	END SECTION DIMENSIONS A	B	C	D
12"	42"	14"	34"	6"
15"	42"	17"	34"	6"
18"	59"	21"	48"	6"
24"	59"	27"	48"	6"
30"	82"	34"	58"	6"
36"	82"	41"	58"	6"

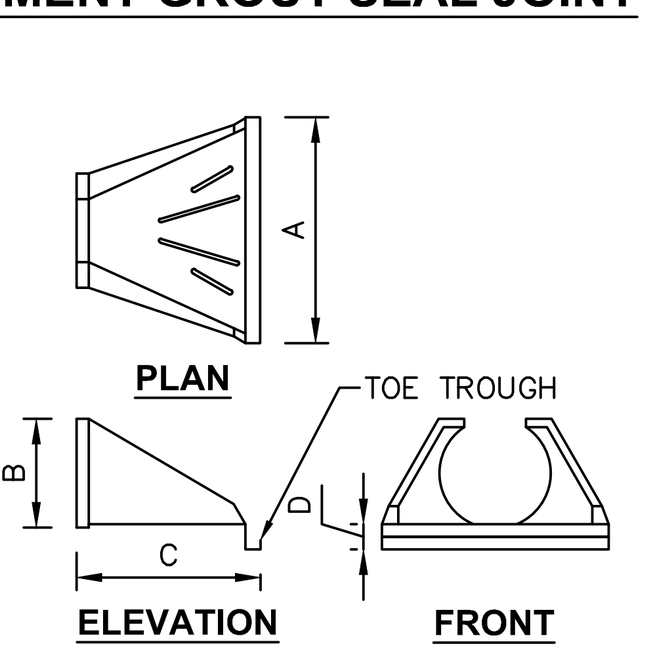

NOTES:
1. SCOPE: THIS SPECIFICATION DESCRIBES 12- THROUGH 36-INCH ADS FLARED END SECTIONS FOR USE IN CULVERT AND DRAINAGE OUTLET APPLICATIONS. FES LARGER THAN 36" SHALL USE CIRCULAR CORRUGATED METAL FLARED END SECTIONS.
2. REQUIREMENTS: THE INVERT OF THE PIPE AND THE END SECTION SHALL BE AT THE SAME ELEVATION. THE ADS FLARED END SECTION SHALL BE HIGH DENSITY POLYETHYLENE MEETING ASTM D3350 MINIMUM CELL CLASSIFICATION 213320C; CONTACT MANUFACTURER FOR ADDITIONAL CELL CLASSIFICATION INFORMATION. WHEN PROVIDED, THE METAL THREADED FASTENING ROD SHALL BE STAINLESS STEEL.
3. INSTALLATION: INSTALLATION SHALL BE IN ACCORDANCE WITH ADS INSTALLATION INSTRUCTIONS AND WITH THOSE ISSUED BY STATE OR LOCAL AUTHORITIES. CONTACT YOUR LOCAL ADS REPRESENTATIVE OR VISIT WWW.ADS-PIPE.COM FOR THE LATEST INSTALLATION INSTRUCTIONS.
4. PROVIDE TRASH RACK ONLY WHERE SPECIFIED ON SITE PLANS.

© 11 **TYPICAL END SECTION - HDPE**
SCALE: NOT TO SCALE

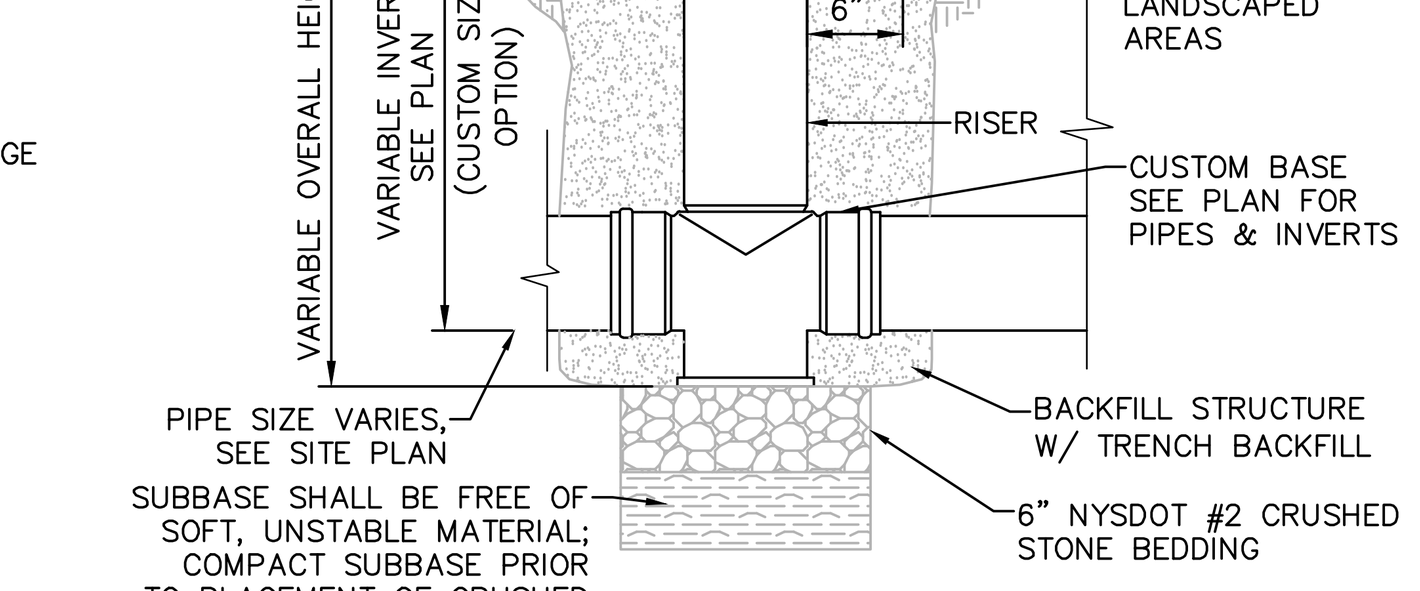

NOTE:
1. BACKFILL USING TRENCH BACKFILL, COMPACTED IN 6" LIFTS.

© 12 **NYOPLAST DRAIN BASIN**
SCALE: NOT TO SCALE

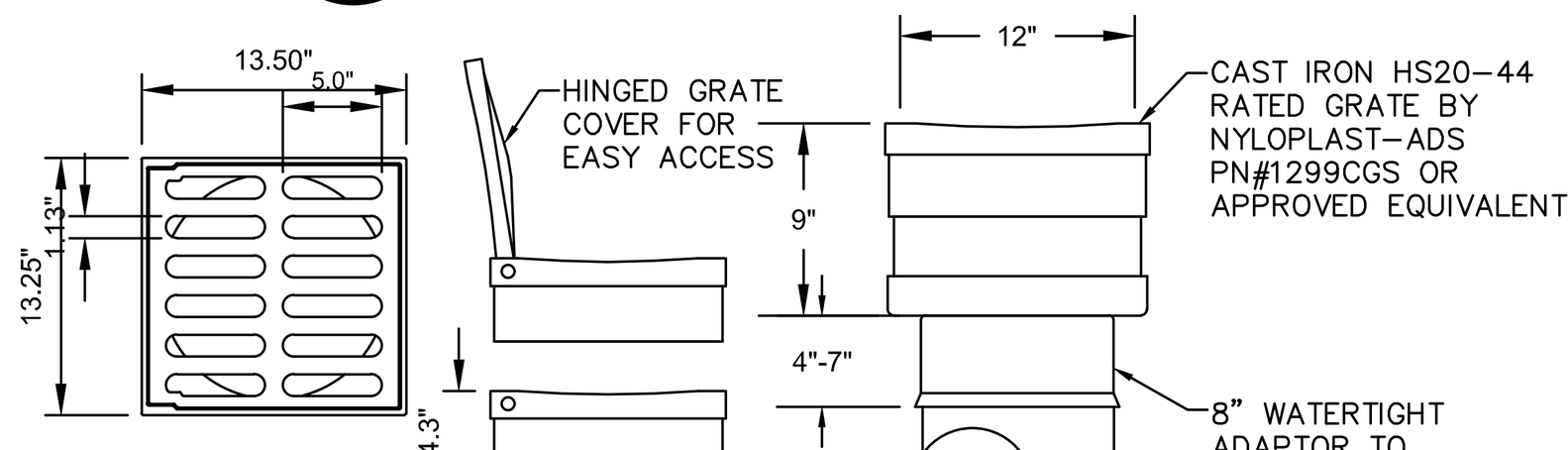

NOTE:
1. CASTINGS RATED STANDARD HS20-44 LOADING
2. MATERIAL SHALL CONFORM TO ASTM A48-CLASS 30B
3. PAINT: CASTINGS TO BE FURNISHED WITH A BLACK PAINT
4. IN-LINE DRAIN BY NYLOPLAST OR APPROVED EQUIVALENT
5. DRAIN AREA = 62.7 SQ. INCH

© 14 **12" IN-LINE DRAIN & GRATE**
SCALE: NOT TO SCALE

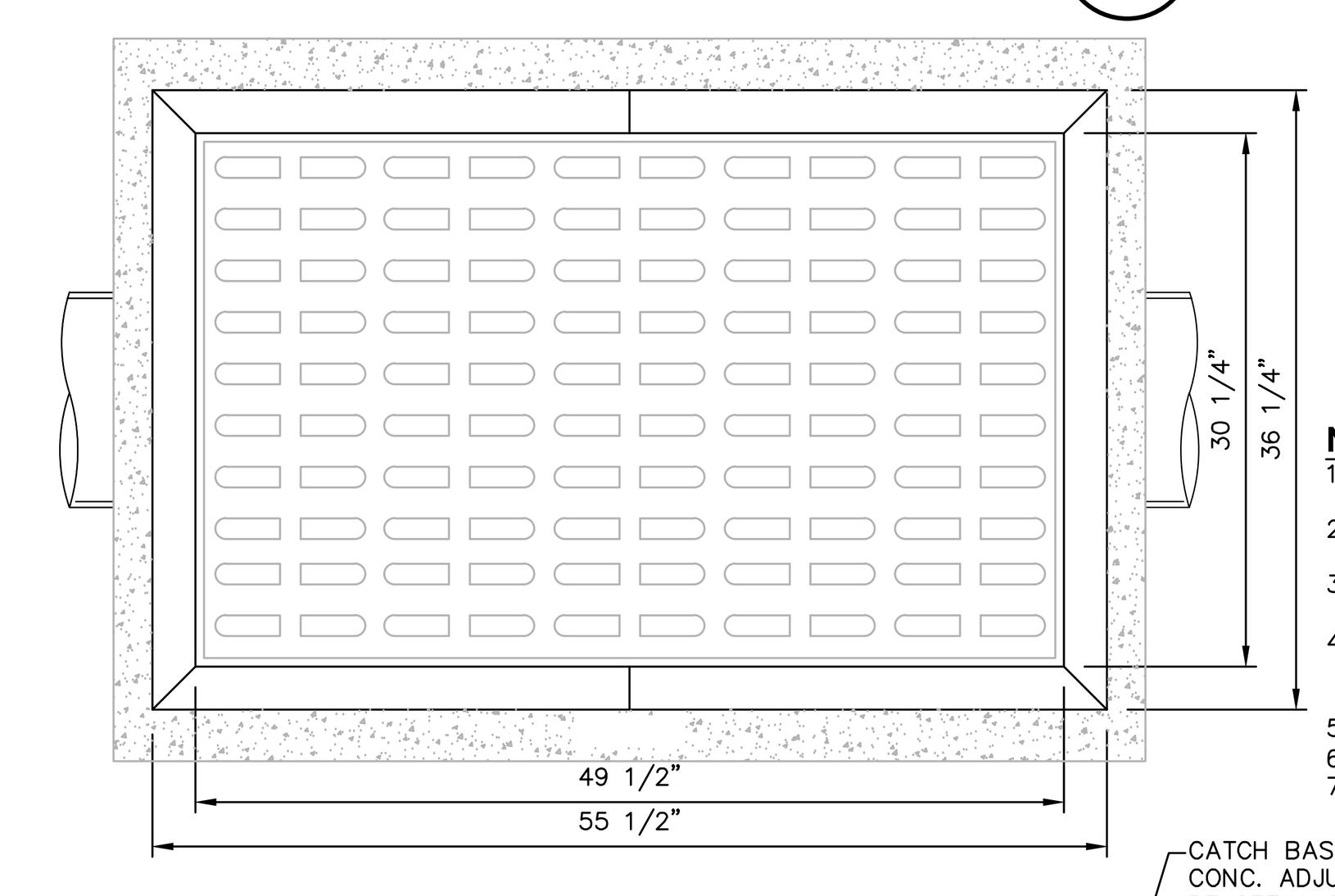

NOTES:
1. CATCH BASIN SHALL BE PRECAST CONCRETE. DESIGNED FOR HS20-44 VEHICULAR LOADING AND 25% IMPACT.
2. FRAME AND COVER SHALL BE DESIGNED FOR HS20-44 VEHICULAR LOADING & 25% IMPACT.
3. CONCRETE CATCH BASIN CASTING CLEAR OPENING DIMENSION MUST MATCH FRAME AND GRATE CLEAR OPENING DIMENSION.
4. CATCH BASINS HAVING A DEPTH GREATER THAN 48" FROM FINISHED SURFACE TO THE TOP OF THE CONCRETE BASE SHALL BE PROVIDED WITH STEPS.
5. BACKFILL USING TRENCH BACKFILL, COMPACTED IN 6" LIFTS.
6. SUMPS FOR CATCH BASINS SHALL BE 12".
7. EJ GROUP GRATE & FRAME PN#00758535A01 OR EQUIVALENT.

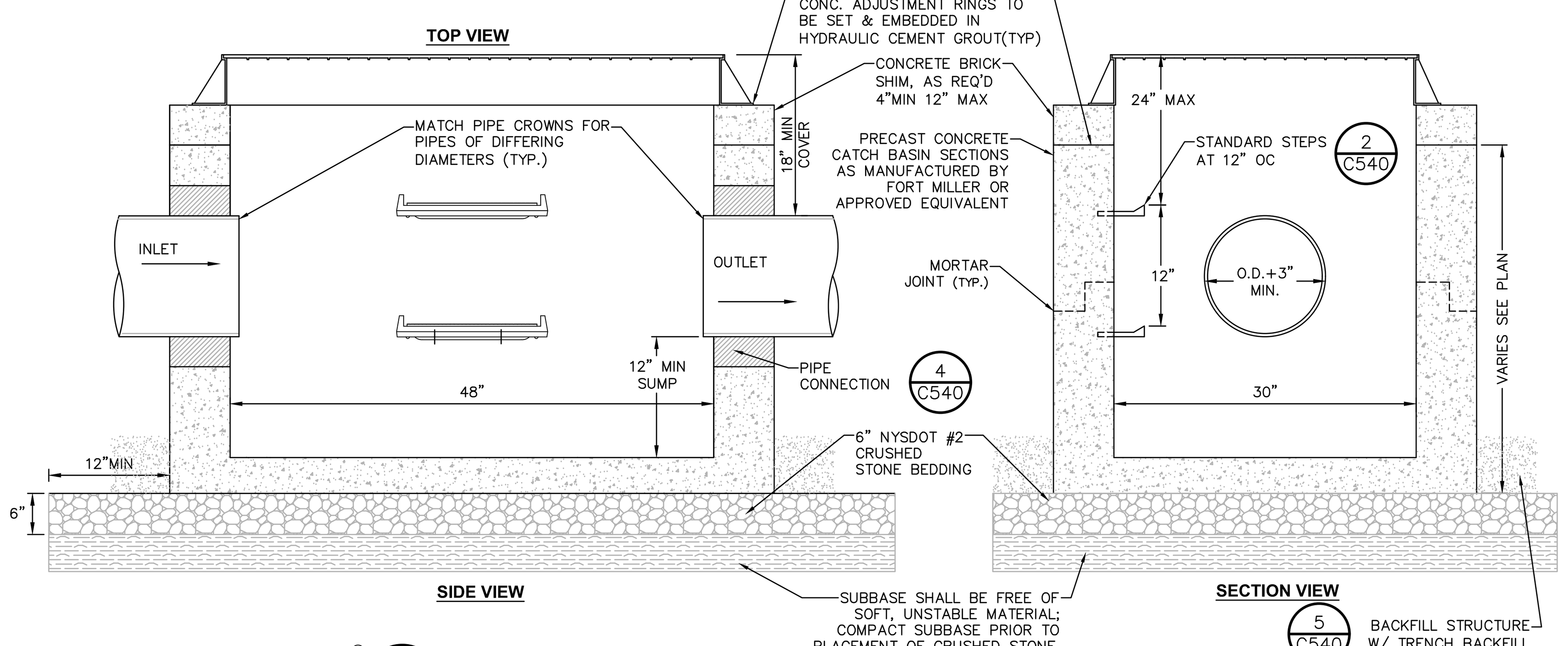

© 7 **PRECAST CONCRETE RECTANGULAR CATCH BASIN DETAIL**
SCALE: NOT TO SCALE

1899CGS
APPROX. DRAIN AREA = 116.72 SQ IN
APPROX. WEIGHT WITH FRAME = 68.50 LBS

DIMENSIONS ARE FOR REFERENCE ONLY
ACTUAL DIMENSIONS MAY VARY
DIMENSIONS ARE IN INCHES
GRATE MEETS H-20 LOAD RATING
QUALITY: MATERIALS SHALL CONFORM TO ASTM A536 GRADE 70-50-05
PAINT: CASTINGS ARE FURNISHED WITH A BLACK PAINT
LOCKING DEVICE AVAILABLE UPON REQUEST SEE DRAWING NO. 7001-110-029

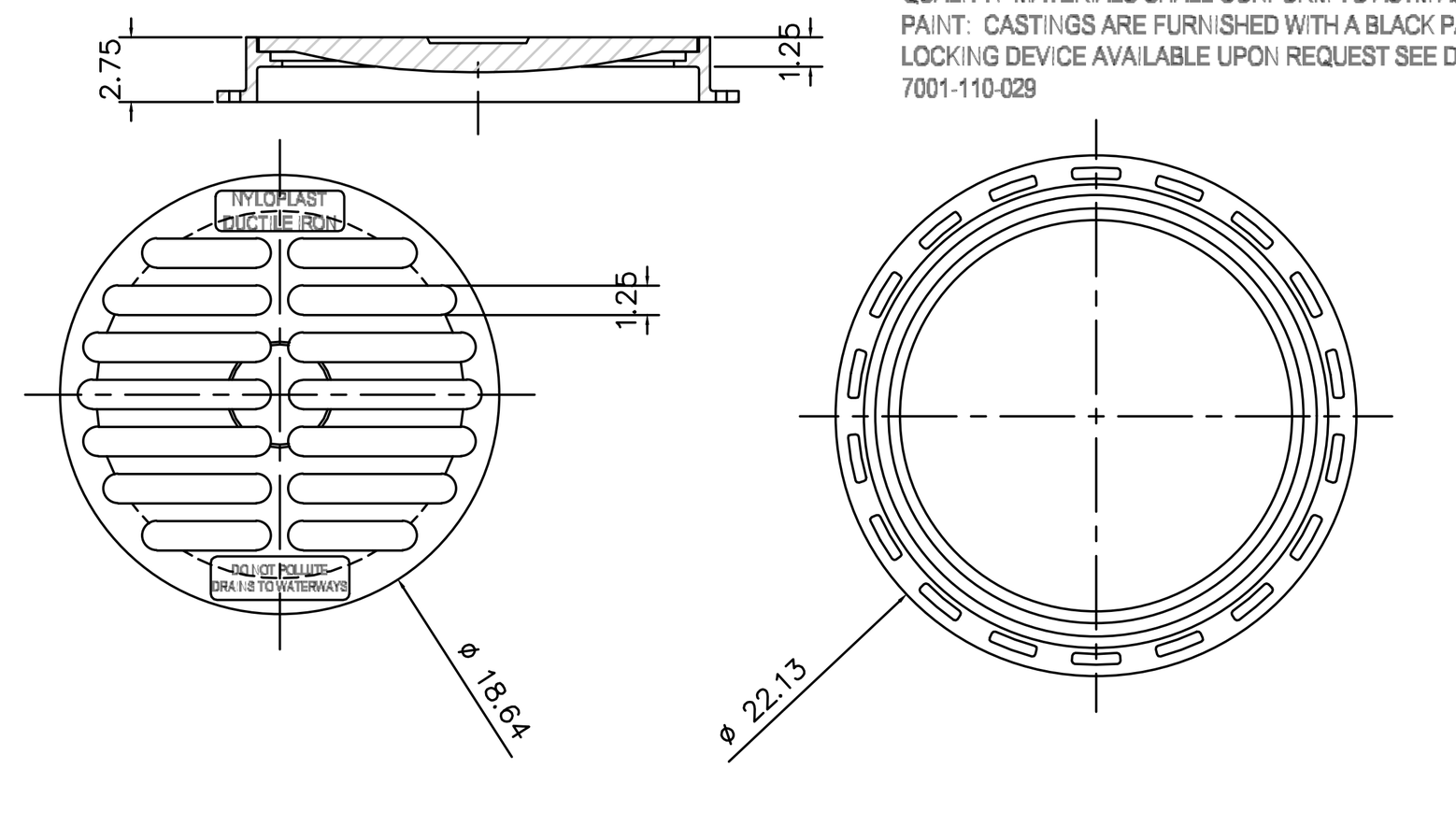

© 17 **18" NYLOPLAST GRATE DETAIL**
SCALE: NOT TO SCALE

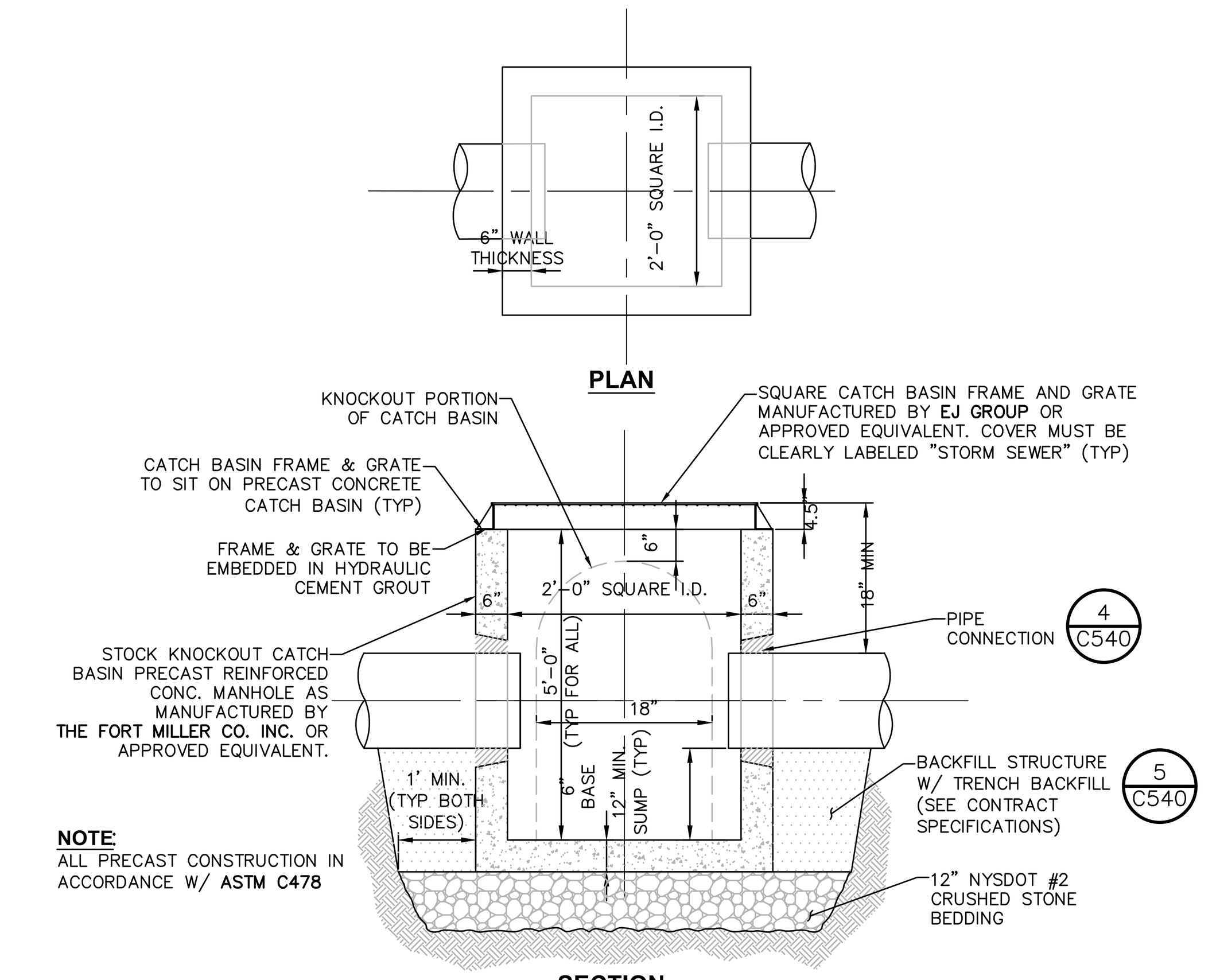

NOTE:
ALL PRECAST CONSTRUCTION IN ACCORDANCE W/ ASTM C478

NOTES:
1. CATCH BASIN INLET BASINS SHALL BE PRECAST CONCRETE. DESIGNED FOR HS20-44 VEHICULAR LOADING + 25% IMPACT AS MANUFACTURED BY FORT MILLER OR APPROVED EQUAL.
2. CATCH BASIN SHALL NOT HAVE A DEPTH GREATER THAN 60" FROM FINISHED SURFACE.
3. BACKFILL USING TRENCH BACKFILL, COMPACTED IN 6" LIFTS.
4. MAX STORM SEWER PIPE FOR SHALLOW 2' CATCH BASIN IS 15"
5. SEE UTILITY PLANS C160-163 FOR STRUCTURE SPECIFIC INVERTS

© 15 **24"X24" PRECAST CONCRETE CATCH BASIN DETAIL**
SCALE: NOT TO SCALE

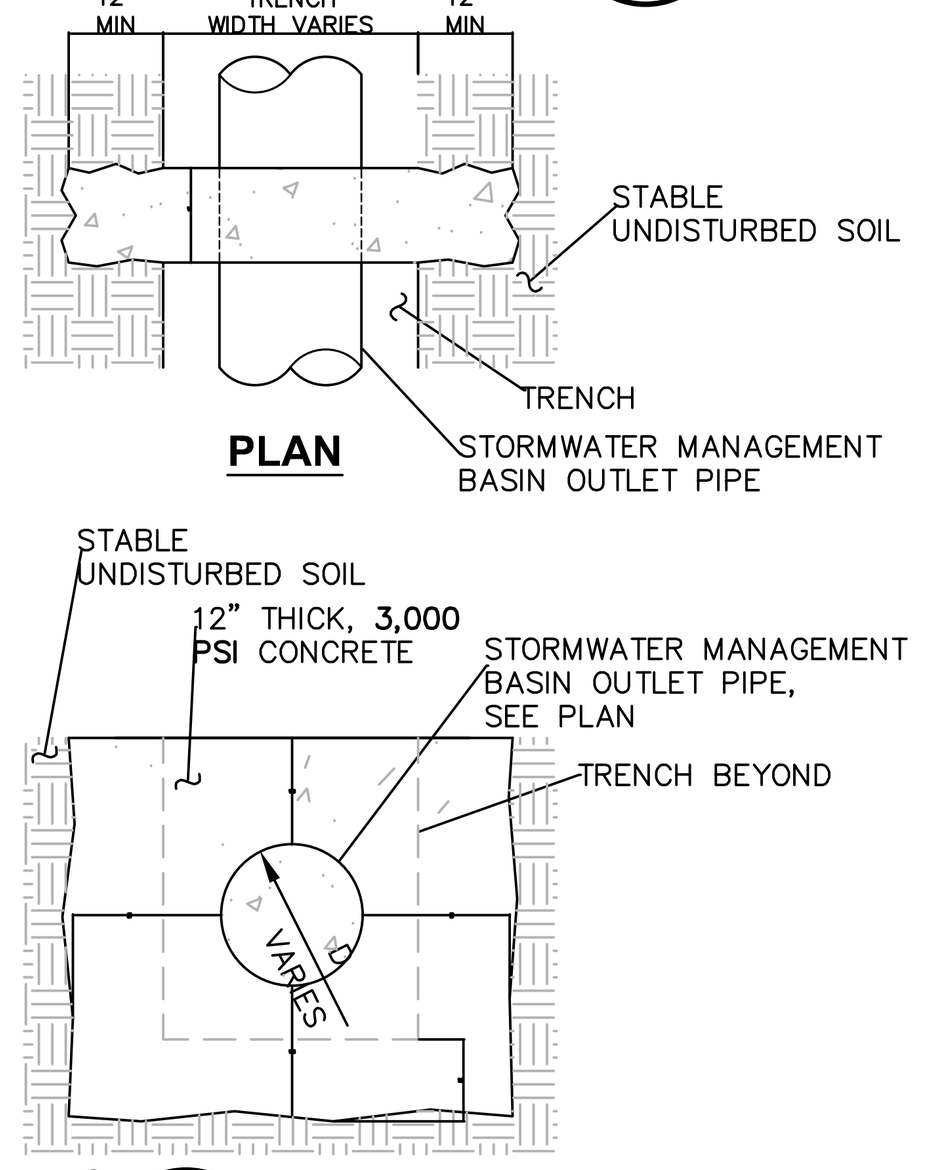

© 10 **ANTI-SEEP COLLAR**
SCALE: 3/4" = 1'-0"

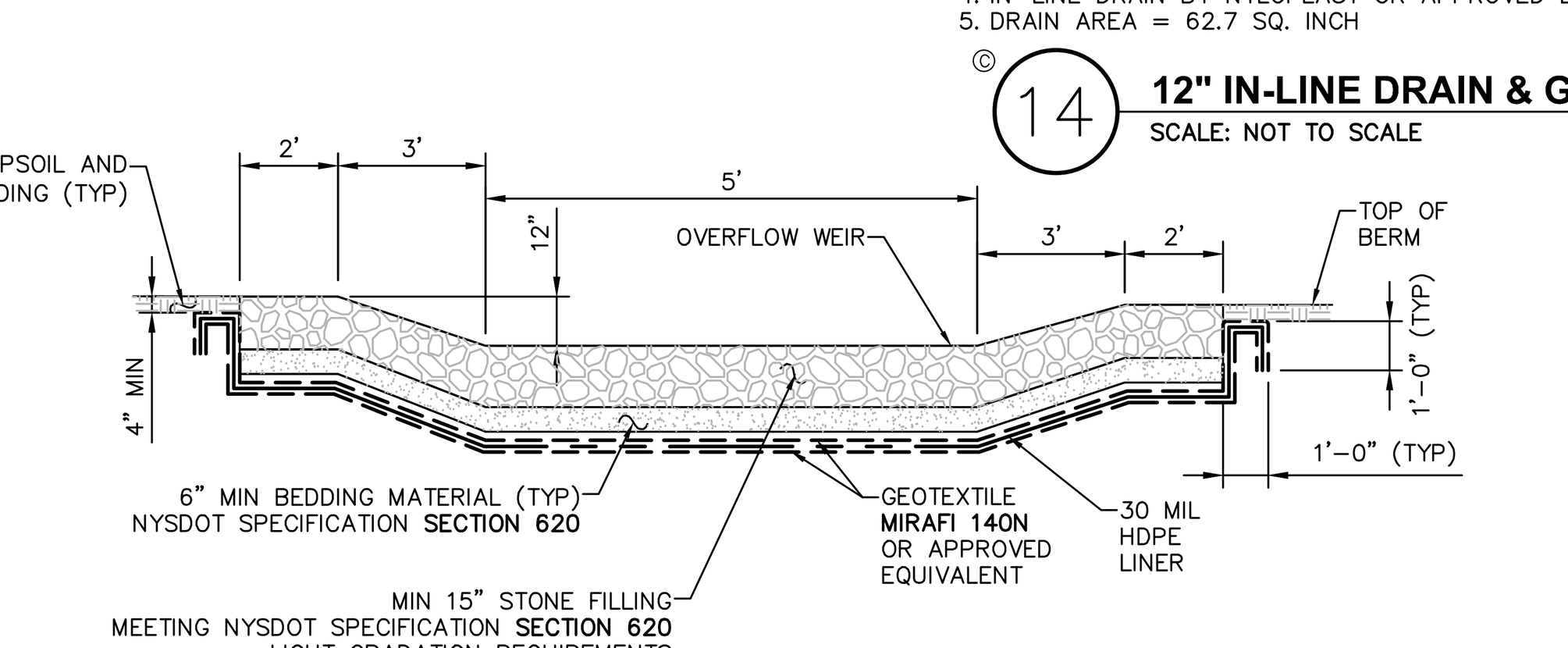

© 13 **SECTION THRU STORM WATER MANAGEMENT BASIN OVER FLOW WEIR**
SCALE: NOT TO SCALE

Drawing Name: B:\GLOBAL\Legacy\Chazen\Projects\81900-81999\81947.00 - Highview II\DWG\01_C540_81747-00_STRMD.DWG
Xref's Attached: X-BORDER_81947-00_30x42
Date Printed: Oct 27, 2025, 4:26pm

LaBella
Powered by partnership.
21 Fox Street
Poughkeepsie, NY 12601
845-454-3980
labellapc.com

NOT FOR CONSTRUCTION
EXP: ##/##/20## EXP: ##/##/20##

CERTIFICATE OF AUTHORIZATION NUMBER:
PROFESSIONAL ENGINEERING: 0021272
LAND SURVEYING: 0021271
GEOLOGICAL: 0021659

It is a violation of New York Education Law Art. 145 Sec. 7209 & Art. 147 Sec. 7307, for any person, unless acting under the direction of a licensed architect, professional engineer, or land surveyor, to alter an item in any way. If an item bearing the seal of an architect, engineer, or land surveyor is altered; the altering architect, engineer, or land surveyor shall affix to the item their seal and notation "altered by" followed by their signature and date of such alteration, and a specific description of the alteration.

© 2025 LaBella Associates

MASELO REALTY LLC
18 EASTVIEW ROAD
MONSEY, NY 10952

HIGHVIEW AT THE FALLKILL CREEK
CITY OF POUGHKEEPSIE
DUTCHESS COUNTY, NEW YORK

NO:	DATE:	DESCRIPTION:
Revisions		

PROJECT NUMBER: CZ81947.00
DRAWN BY: JRR
REVIEWED BY: KGA
ISSUED FOR: PLANNING BOARD REVIEW
DATE: 10/28/2025
DRAWING NAME:

STORMWATER DETAILS

DRAWING NUMBER:

C540

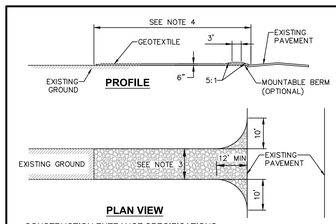

PLAN VIEW

CONSTRUCTION ENTRANCE SPECIFICATIONS:

1. STONE SIZE – USE 2" STONE, OR RECLAIMED OR RECYCLED CONCRETE EQUIVALENT.
2. THICKNESS – NOT LESS THAN SIX (6) INCHES.
3. WIDTH – TWELVE (12) FOOT MINIMUM, BUT NOT LESS THAN THE FULL WIDTH AT POINTS WHERE INGRESS OR EGRESS OCCURS. TWENTY FOUR (24) FEET IF SINGLE ENTRANCE TO SITE.
4. LENGTH – NOT LESS THAN 50' (EXCEPT ON A SINGLE RESIDENCE LOT WHERE A 30' MINIMUM LENGTH WOULD APPLY).
5. GEOTEXTILE – WILL BE PLACED OVER THE ENTIRE AREA PRIOR TO PLACING OF STONE.
6. SURFACE WATER – ALL SURFACE WATER FLOWING OR DIVERTED TOWARD CONSTRUCTION ENTRANCES SHALL BE PIPED ACROSS THE ENTRANCE. IF PIPING IS IMPRACTICAL, A MOUNTABLE BERM WITH 5:1 SLOPES WILL BE PERMITTED.
7. MAINTENANCE – THE ENTRANCE SHALL BE MAINTAINED IN A CONDITION WHICH WILL PREVENT TRACKING OR FLOWING OF SEDIMENT ONTO PUBLIC RIGHTS–OF–WAY. THIS MAY REQUIRE PERIODIC TOP DRESSING WITH ADDITIONAL STONE AS CONDITIONS DEMAND AND REPAIR AND/OR CLEANOUT OF ANY MEASURES USED TO TRAP SEDIMENT. ALL SEDIMENT SPILLED, DROPPED, WASHED OR TRACKED ONTO PUBLIC RIGHTS–OF–WAY MUST BE REMOVED IMMEDIATELY.
8. WASHING – WHEELS SHALL BE CLEANED TO REMOVE SEDIMENT PRIOR TO ENTRANCE ONTO PUBLIC RIGHTS–OF–WAY. WHEN WASHING IS REQUIRED, IT SHALL BE DONE ON AN AREA STABILIZED WITH STONE AND WHICH DRAINS INTO AN APPROVED SEDIMENT TRAPPING DEVICE.
9. PERIODIC INSPECTION AND NEEDED MAINTENANCE SHALL BE PROVIDED AFTER EACH RAIN.

C-1 **STABILIZED CONSTRUCTION ACCESS DETAIL**
SCALE: NOT TO SCALE

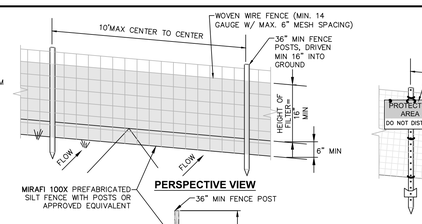

PERSPECTIVE VIEW

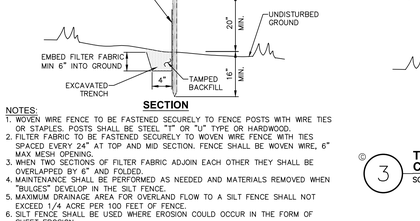

SECTION

NOTES:

1. WOVEN WIRE FENCE TO BE FASTENED SECURELY TO FENCE POSTS WITH WIRE TIES OR STAPLES. POSTS SHALL BE STEEL "T" OR "L" TYPE OR HARDWOOD.
2. FILTER FABRIC TO BE FASTENED SECURELY TO WOVEN WIRE FENCE WITH TIES SPACED EVERY 24" AT TOP AND MID SECTION. FENCE SHALL BE WOVEN WIRE, 6" MAX MESH OPENING.
3. WHEN TWO SECTIONS OF FILTER FABRIC ADJOIN EACH OTHER THEY SHALL BE OVERLAPPED 6" AND FOLDED.
4. MAINTENANCE SHALL BE PERFORMED AS NEEDED AND MATERIALS REMOVED WHEN "BULGES" DEVELOP IN THE SILT FENCE.
5. MAXIMUM DRAINAGE AREA FOR OVERLAND FLOW TO A SILT FENCE SHALL NOT EXCEED 1/4 ACRE PER 100 FEET OF FENCE.
6. SILT FENCE SHALL BE USED WHERE EROSION COULD OCCUR IN THE FORM OF SHEET EROSION.
7. SILT FENCE SHALL NOT BE USED WHEN A CONCENTRATION OF WATER IS FLOWING TO THE BARRIER.
8. MAXIMUM ALLOWABLE SLOPE LENGTHS CONTRIBUTING RUN–OFF TO A SILT FENCE ARE:

SLOPE STEEPNESS	MAXIMUM SLOPE LENGTH(FT)
2:1	25
3:1	50
4:1	75
5:1 OR FLATTER	100

C-2 **SILT FENCE INSTALLATION DETAIL**
SCALE: NOT TO SCALE

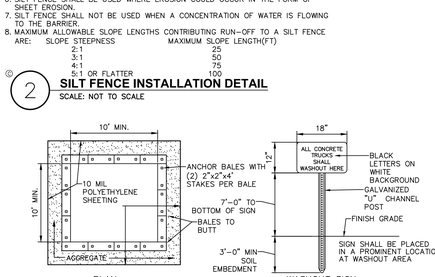

PLAN

SECTION

NOTES:

1. FILTER FABRIC SHALL HAVE AN EOS OF 40–85.
2. CUT FABRIC FROM CONTINUOUS ROLL TO ELIMINATE JOINTS. IF JOINTS ARE NEEDED, OVERLAP TO THE NEXT STAKE.
3. STAKE MATERIALS WILL BE STANDARD 2"x4" WOOD OR EQUIVALENT, WITH A MINIMUM LENGTH OF 3 FEET.
4. SPACE STAKES EVENLY AROUND INLET 3 FEET APART AND DRIVE MINIMUM 18" DEEP. SPANS GREATER THAN 3 FEET MAY BE BRIDGED WITH THE USE OF WIRE MESH BEHIND FABRIC FOR SUPPORT.
5. FABRIC SHALL BE EMBEDDED 1 FOOT MINIMUM BELOW GROUND AND BACKFILLED. IT SHALL BE SECURELY FASTENED TO THE STAKES AND FRAME.
6. A 2"x4" WOOD FRAME SHALL BE COMPLETED AROUND THE CREST OF THE FABRIC FOR OVERFLOW STABILITY.
7. MAXIMUM DRAINAGE AREA IS 1 ACRE.
8. INLET PROTECTION SHALL REMAIN IN–PLACE UNTIL SITE HAS BEEN STABILIZED.

C-4 **TEMPORARY OUT OF PAVEMENT FILTER FABRIC DROP INLET PROTECTION DETAIL**
SCALE: NOT TO SCALE

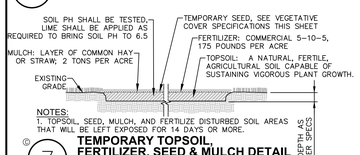

NOTES:

1. TOPSOIL, SEED, MULCH, AND FERTILIZE DISTURBED SOIL AREAS THAT WILL BE LEFT EXPOSED FOR 14 DAYS OR MORE.

C-7 **TEMPORARY TOPSOIL, FERTILIZER, SEED & MULCH DETAIL**
SCALE: NOT TO SCALE

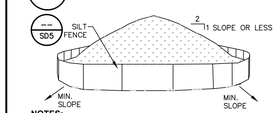

NOTES:

1. AREA CHOSEN FOR STOCKPILING OPERATIONS SHALL BE DRY AND STABLE.
2. MAXIMUM SLOPE OF STOCKPILE SHALL BE 1V: 2H.
3. UPON COMPLETION OF SOIL STOCKPILING, EACH PILE SHALL BE SURROUNDED WITH SILT FENCING, THEN STABILIZED WITH VEGETATION OR COVERED.
4. SEE SPECIFICATIONS FOR INSTALLATION OF SILT FENCE.

C-8 **TEMPORARY SOIL STOCKPILE DETAIL**
SCALE: NOT TO SCALE

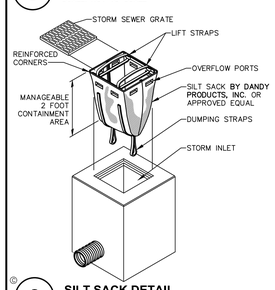

C-9 **SILT SACK DETAIL**
SCALE: NOT TO SCALE

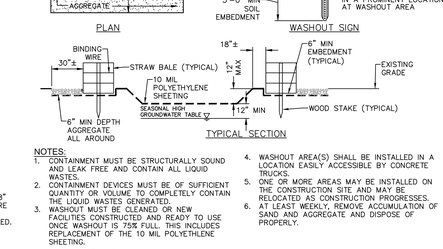

PLAN

WASHOUT SIGN



TYPICAL SECTION

NOTES:

1. CONTAINMENT MUST BE STRUCTURALLY SOUND AND LEAK FREE AND CONTAIN ALL LIQUID WASTES.
2. CONTAINMENT DEVICES MUST BE OF SUFFICIENT QUANTITY OR VOLUME TO COMPLETELY CONTAIN THE LIQUID WASTES GENERATED.
3. WASHOUT MUST BE CLEANED OR NEW FACILITIES CONSTRUCTED AND READY TO USE ONCE WASHOUT IS 75% FULL. THIS INCLUDES REPLACEMENT OF THE 10 MIL POLYETHLENE SHEETING.
4. WASHOUT AREA(S) SHALL BE INSTALLED IN A LOCATION EASILY ACCESSIBLE BY CONCRETE TRUCKS.
5. ONE OR MORE AREAS MAY BE INSTALLED ON THE CONSTRUCTION SITE AND MAY BE RELOCATED AS CONSTRUCTION PROGRESSES.
6. AT LEAST WEEKLY, REMOVE ACCUMULATION OF SAND AND AGGREGATE AND DISPOSE OF PROPERLY.

C-5 **CONCRETE WASHOUT AREA DETAIL**
SCALE: NOT TO SCALE

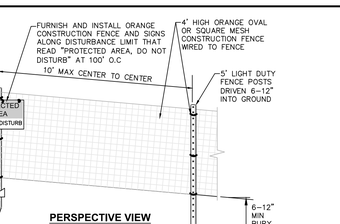

PERSPECTIVE VIEW

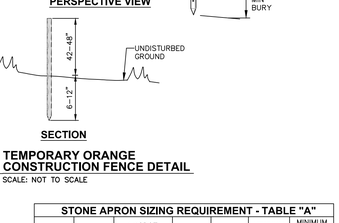

SECTION

C-3 **TEMPORARY ORANGE CONSTRUCTION FENCE DETAIL**
SCALE: NOT TO SCALE

PERSPECTIVE VIEW

SECTION

C-3 **TEMPORARY ORANGE CONSTRUCTION FENCE DETAIL**
SCALE: NOT TO SCALE

STONE APRON SIZING REQUIREMENT - TABLE "A"

CULVERT DIA. (D)	CULVERT SLOPE, %	NYSDOT STANDARD STONE FILLING APRON MATERIAL	d50	dMAX	MINIMUM APRON THICKNESS (IN)	MINIMUM OUTLET APRON LENGTH(FT) (Lo)
12"	< 8	LIGHT	6"	9"	18	10
	8–10	MEDIUM	9"–12"	14"–18"	24	10
18"	< 4	LIGHT	6"	9"	18	10
	4–6	MEDIUM	9"–12"	14"–18"	24	12
	6–8	HEAVY	15"–18"	22"–27"	36	12
	8–10	HEAVY	15"–18"	22"–27"	36	18
24"	< 3	LIGHT	6"	9"	18	12
	3–4	MEDIUM	9"–12"	14"–18"	24	16
	4–8	HEAVY	15"–18"	22"–27"	36	24
30"	< 1	LIGHT	6"	9"	18	15
	1–2	MEDIUM	9"–12"	14"–18"	24	20
	2–4	HEAVY	15"–18"	22"–27"	36	25
	4–6	HEAVY	15"–18"	22"–27"	36	30
36"	< 2	MEDIUM	9"–12"	14"–18"	24	24
	2–3	HEAVY	15"–18"	22"–27"	36	30
	3–5	HEAVY	15"–18"	22"–27"	36	36
42"	< 1	MEDIUM	9"–12"	14"–18"	24	28
	1–2	HEAVY	15"–18"	22"–27"	36	35
	2–3	HEAVY	15"–18"	22"–27"	36	42
48"	< 1	MEDIUM	9"–12"	14"–18"	24	32
	1–2	HEAVY	15"–18"	22"–27"	36	40
	2–3	HEAVY	15"–18"	22"–27"	36	48

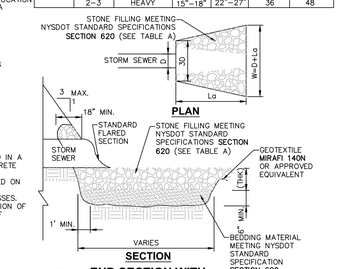

PLAN

SECTION

C-6 **END SECTION WITH STONE LINED APRON DETAIL**
SCALE: NOT TO SCALE

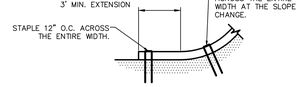

"BOTTOM OF SLOPE TERMINATION"

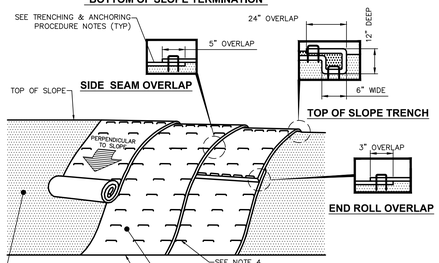

NOTES:

1. PREPARE THE TOPSOIL (SEEDBED) FIRST BY RAKING, SHAPING, FINE GRADING, COMPACTING, SEEDING & FERTILIZING THE SLOPES.
2. USE THE TRENCHING & ANCHORING PROCEDURES DETAILED HEREIN TO SECURE ANY EXPOSED MATERIAL ENDS. SECURE ALL PRODUCT OVERLAPS. OVERLAP IN THE DIRECTION OF WATER FLOW, PERPENDICULAR TO THE SLOPE.
3. KEEP EROSION CONTROL BLANKET IN SOLID CONTACT WITH THE TOPSOIL.
4. USE THE REQUIRED NUMBER OF STAPLES/STAKES TO SECURELY FASTEN THE EROSION CONTROL BLANKET TO THE SLOPE. IN LOOSE SOIL CONDITIONS, THE USE OF STAPLES/STAKES LENGTHS GREATER THAN 6" MAYBE NECESSARY FOR PROPER SECURING. STAPLE PATTERNS & OVERLAPS ARE DEPENDENT ON SITE CONDITIONS & MANUFACTURER'S REQUIREMENTS. CONTRACTOR SHALL CONSULT WITH MANUFACTURER FOR ACTUAL SITE SPECIFIC REQUIREMENTS.

TRENCHING & ANCHORING PROCEDURE NOTES:

SIDE SEAM OVERLAP: THE EDGES OF PARALLEL BLANKETS SHALL BE STAPLED WITH A 5" OVERLAP.

TOP OF SLOPE TRENCH: BEGIN AT THE TOP OF SLOPE BY ANCHORING THE EROSION CONTROL BLANKET IN A 6"D x 6"W TRENCH WITH A 12" OVERLAP EXTENDED BEYOND THE UP–SLOPE PORTION OF THE TRENCH. ANCHOR WITH A ROW OF STAPLES/STAKES 12" O.C. IN THE BOTTOM OF THE TRENCH. BACKFILL & COMPACT THE TRENCH AFTER STAPLING. APPLY SEED TO THE COMPACTED SOIL & FOLD THE REMAINING 12" PORTION OF THE EROSION CONTROL BLANKET BACK OVER THE SEED & COMPACTED SOIL. SECURE THE EROSION CONTROL BLANKET OVER THE COMPACTED SOIL WITH A ROW OF STAPLES/STAKES SPACED 12" O.C. ACROSS THE ENTIRE WIDTH.

END ROLL OVERLAP: CONSECUTIVE BLANKETS SPLICED DOWN THE SLOPE SHALL BE PLACED END OVER END (SHINGLE–STYLE) WITH A 3" OVERLAP. STAPLE THRU OVERLAPPED AREAS, 12" APART ACROSS THE ENTIRE WIDTH.

C-10 **EROSION CONTROL BLANKET INSTALLATION DETAIL**
SCALE: NTS

SPDES GENERAL PERMIT GP-0-25-001 COMPLIANCE NOTES:

THIS PLAN SET AND THE ACCOMPANYING SWPPP ENTITLED STORMWATER POLLUTION PREVENTION PLAN FOR HIGHVIEW II HAVE BEEN SUBMITTED AS A SET. THESE ENGINEERING DRAWINGS ARE CONSIDERED AN INTEGRAL PART OF THE SWPPP. THEREFORE THE PLAN SET IS NOT CONSIDERED COMPLETE WITHOUT THE SWPPP.

1. THIS PROJECT HAS NOT RECEIVED WRITTEN APPROVAL FROM **CITY OF POUGHKEEPSIE** ALLOWING THE DISTURBANCE OF MORE THAN FIVE (5) ACRES OF LAND AT **ANY** ONE TIME. THEREFORE, IF THE CONTRACTOR'S CONSTRUCTION SEQUENCE REQUIRES THE DISTURBANCE OF MORE THAN FIVE ACRES AT ANY ONE TIME, WRITTEN APPROVAL MUST BE OBTAINED FROM NYSDEC PRIOR TO EXCEEDING THE 5 ACRE LIMIT.

CONSTRUCTION SEQUENCING NOTES:

1. PRIOR TO COMMENCING ANY CLEARING, GRUBBING, EARTHWORK ACTIVITIES, ETC.AT THE SITE, THE CONTRACTOR SHALL FLAG THE WORK LIMITS AND SHALL INSTALL TEMPORARY EROSION AND SEDIMENT CONTROL MEASURES (I.E. SILT FENCES, TREE PROTECTION/BARRIER FENCING, STABILIZED CONSTRUCTION ENTRANCES, STORM DRAIN SEDIMENT FILTERS, DRAINAGE DITCH SEDIMENT FILTERS, ETC.) INDICATED ON THE PROJECT DRAWINGS. TEMPORARY EROSION AND SEDIMENT CONTROL MEASURES MUST BE CONSTRUCTED, STABILIZED, AND FUNCTIONAL BEFORE SITE DISTURBANCE BEGINS WITHIN THEIR TRIBUTARY AREAS.
2. THE CONTRACTOR SHALL CLEAR AND GRUB THE AREA OF THE STORMWATER MANAGEMENT FACILITIES. THIS AREA SHALL NOT EXCEED FIVE (5) ACRES IN EXTENT WITHOUT TEMPORARY STABILIZATION.
3. THE STORMWATER DETENTION BASIN SHALL BE UTILIZED AS A TEMPORARY SEDIMENT TRAP DURING CONSTRUCTION. THE CONTRACTOR SHALL INSTALL THE OUTLET CONTROL STRUCTURES AND THE EARTHEN BERM. THE BASIN SHALL BE GRADED TO THE TOP OF THE AQUATIC BENCH AS INDICATED IN THE TYPICAL STORMWATER MANAGEMENT BASIN SECTION PRESENTED IN THE PROJECT DRAWINGS.
4. PRIOR TO COMMENCING CLEARING, GRUBBING AND/OR EARTHWORK ACTIVITIES IN ANY OTHER AREA OF THE SITE, THE CONTRACTOR SHALL INSTALL INLET AND OUTLET PROTECTION MEASURES (RIPRAP OVERFLOW WEIR(S), CULVERT INLET/OUTLET PROTECTION, ETC.) AND SHALL STABILIZE THE AREAS DISTURBED DURING THE CONSTRUCTION OF THE SEDIMENT BASIN.
5. THE CONTRACTOR SHALL INSTALL TEMPORARY DIVERSION MEASURES WITH ASSOCIATED STABILIZATION MEASURES (I.E., VEGETATIVE COVER, DRAINAGE DITCH SEDIMENT FILTERS, STORM DRAIN SEDIMENT FILTERS, ETC.) TO ASSURE THAT STORMWATER RUNOFF IS CONVEYED TO THE TEMPORARY SEDIMENT BASIN.
6. TEMPORARY DIVERSION MEASURES SHALL BE LOCATED IN A MANNER THAT WILL ASSURE THAT THE AREA TRIBUTARY TO EACH DIVERSION DOES NOT EXCEED FIVE (5) ACRES. THESE TEMPORARY DIVERSION MEASURES SHALL BE INSPECTED DAILY AND REPAIRED/STABILIZED AS NECESSARY TO MINIMIZE EROSION.
7. THE CONTRACTOR SHALL COMMENCE SITE CONSTRUCTION ACTIVITIES INCLUDING CLEARING & GRADING OF THE PROPOSED AREA OF DISTURBANCE AS REQUIRED.
8. INSTALL PROTECTIVE MEASURES AT THE LOCATIONS OF ALL CATCH INLETS, CURB INLETS, AND AT THE ENDS OF ALL EXPOSED STORM SEWER PIPES.
9. CONSTRUCT ALL UTILITIES, CURB AND GUTTER, GUTTER INLETS, AREA INLETS, AND STORM SEWER MANHOLES, AS SHOWN ON THE PLANS. INLET PROTECTION MAY BE REMOVED TEMPORARILY FOR THIS CONSTRUCTION. PLACE REQUIRED RIP–RAP AT LOCATIONS SHOWN ON THE PLANS.
10. FINALIZE PAVEMENT SUB–GRADE PREPARATION.
11. REMOVE PROTECTIVE MEASURES AROUND INLETS AND MANHOLES NO MORE THAN 24 HOURS PRIOR TO PLACING STABILIZED BASE COURSE.
12. INSTALL SUB–BASE MATERIAL AS REQUIRED FOR PAVEMENT.
13. PRIOR TO FINALIZING CONSTRUCTION OF THE STORMWATER MANAGEMENT FACILITY, ALL CATCH BASINS AND DRAINAGE LINES SHALL BE CLEANED OF ALL SILT AND SEDIMENT.
14. UPON COMPLETION OF SITE CONSTRUCTION ACTIVITIES, THE CONTRACTOR SHALL FINALIZE CONSTRUCTION OF THE STORMWATER MANAGEMENT FACILITY. THE CONTRACTOR SHALL FINISH GRADE THE FORBAY(S), AQUATIC BENCHES, AND WET POOL(S) AND STABILIZE AS INDICATED IN THE PROJECT DRAWINGS.
15. THE CONTRACTOR SHALL REMOVE ALL TEMPORARY EROSION AND SEDIMENT CONTROL MEASURES AND IMMEDIATELY ESTABLISH PERMANENT VEGETATION ON THE AREAS DISTURBED DURING THEIR REMOVAL.

EROSION AND SEDIMENT CONTROL MEASURES:

1. DAMAGE TO SURFACE WATERS RESULTING FROM EROSION AND SEDIMENTATION SHALL BE MINIMIZED BY STABILIZING ALL DISTURBED AREAS AND BY REMOVING SEDIMENT FROM CONSTRUCTION SITE DISCHARGES.
2. AS MUCH AS IS PRACTICAL, EXISTING VEGETATION SHALL BE PRESERVED. FOLLOWING THE COMPLETION OF CONSTRUCTION ACTIVITIES IN ANY PORTION OF THE SITE, PERMANENT VEGETATION SHALL BE ESTABLISHED ON ALL EXPOSED SOILS.
3. SITE PREPARATION ACTIVITIES SHALL BE PLANNED TO MINIMIZE THE SCOPE AND DURATION OF SOIL DISRUPTION.
4. PERMANENT TRAFFIC CORRIDORS SHALL BE ESTABLISHED AND "ROUTES OF CONVENIENCE" SHALL BE AVOIDED. STABILIZED CONSTRUCTION ENTRANCES SHALL BE INSTALLED AT ALL POINTS OF ENTRY ONTO THE PROJECT SITE.

GENERAL EROSION AND SEDIMENT CONTROL NOTES:

1. ALL EROSION AND SEDIMENT CONTROL MEASURES ARE TO BE IN STRICT COMPLIANCE WITH "NEW YORK STATE STANDARDS AND SPECIFICATIONS FOR EROSION AND SEDIMENT CONTROL", NOVEMBER 2016.
2. EXCESS SOIL TO BE STOCKPILED WITHIN THE LIMITS OF SITE DISTURBANCE IF NOT USED IMMEDIATELY FOR GRADING PURPOSES. INSTALL SILT FENCE AROUND SOIL STOCKPILES.
3. APPLY SURFACE STABILIZATION AND RESTORATION MEASURES. AREAS UNDERGOING CLEARING OR GRADING AND ANY AREAS DISTURBED BY CONSTRUCTION ACTIVITIES WHERE WORK IS DELAYED, SUSPENDED, OR INCOMPLETE AND WILL NOT BE REDISTURBED FOR 21 DAYS OR MORE SHALL BE STABILIZED WITH TEMPORARY VEGETATIVE COVER WITHIN 14 DAYS AFTER CONSTRUCTION ACTIVITY IN THAT PORTION OF THE SITE HAS CEASED. (SEE SPECIFICATIONS FOR TEMPORARY VEGETATIVE COVER). AREAS UNDERGOING CLEARING OR GRADING AND ANY AREAS DISTURBED BY CONSTRUCTION ACTIVITIES WHERE WORK IS COMPLETE AND WILL NOT BE REDISTURBED SHALL BE STABILIZED AND RESTORED WITH PERMANENT VEGETATIVE COVER AS SOON AS SITE AREAS ARE AVAILABLE AND WITHIN 14 DAYS AFTER WORK IS COMPLETE. (SEE SPECIFICATIONS FOR PERMANENT VEGETATIVE COVER). SEEDING FOR PERMANENT VEGETATIVE COVER SHALL BE WITHIN THE SEASONAL LIMITATIONS. PROVIDE STABILIZATION WITH TEMPORARY VEGETATIVE COVER WITHIN 14 DAYS AFTER WORK IS COMPLETE, FOR SEEDING OUTSIDE PERMITTED SEEDING PERIODS.
4. SEEDED AREAS TO BE MULCHED WITH STRAW OR HAY MULCH IN ACCORDANCE WITH VEGETATIVE COVER SPECIFICATIONS.
5. THE CONTRACTOR IS RESPONSIBLE FOR THE INSTALLATION AND MAINTENANCE OF ALL EROSION AND SEDIMENT CONTROL MEASURES THROUGHOUT THE COURSE OF CONSTRUCTION.
6. THE CONTRACTOR IS RESPONSIBLE FOR CONTROLLING DUST BY SPRINKLING EXPOSED SOIL AREAS PERIODICALLY WITH WATER AS REQUIRED. THE CONTRACTOR IS TO SUPPLY ALL EQUIPMENT AND WATER.
7. WHEN ALL DISTURBED AREAS ARE STABLE, ALL TEMPORARY EROSION AND SEDIMENT CONTROL MEASURES SHALL BE REMOVED.

MAINTENANCE OF EROSION AND SEDIMENT CONTROL MEASURES:

PERMANENT AND TEMPORARY VEGETATION:
INSPECT ALL AREAS THAT HAVE RECEIVED VEGETATION EVERY SEVEN DAYS & AFTER EVERY RAIN EVENT. ALL AREAS DAMAGED BY EROSION OR WHERE SEED HAS NOT ESTABLISHED SHALL BE REPAIRED AND RESTABILIZED IMMEDIATELY.

STABILIZED CONSTRUCTION ENTRANCE:
INSPECT THE ENTRANCE PAD EVERY SEVEN DAYS & AFTER EVERY RAIN EVENT. CHECK FOR MUD, SEDIMENT BUILD–UP AND PAD INTEGRITY. MAKE DAILY INSPECTIONS DURING WET WEATHER. RESHAPE PAD AS NEEDED FOR DRAINAGE AND RUNOFF CONTROL. WASH AND REPLACE STONE AS NEEDED. THE STONE IN THE ENTRANCE SHOULD BE WASHED OR REPLACED WHENEVER THE ENTRANCE FAILS TO REDUCE MUD BEING CARRIED OFF–SITE BY VEHICLES. IMMEDIATELY REMOVE MUD AND SEDIMENT TRACKED OR WASHED ONTO PUBLIC ROADS BY BRUSHING OR SWEEPING. REMOVE TEMPORARY CONSTRUCTION ENTRANCE AS SOON AS THEY ARE NO LONGER NEEDED TO PROVIDE ACCESS TO THE SITE.

SILT FENCE:
INSPECT FOR DAMAGE EVERY SEVEN DAYS & AFTER EVERY RAIN EVENT. MAKE ALL REPAIRS IMMEDIATELY. REMOVE SEDIMENT FROM THE UP–SLOPE FACE OF THE FENCE BEFORE IT ACCUMULATES TO A HEIGHT EQUAL TO 1/3 THE HEIGHT OF THE FENCE. IF FENCE FABRIC TEARS, BEGINS TO DECOMPOSE, OR IN ANY WAY BECOMES INEFFECTIVE, REPLACE THE AFFECTED SECTION OF FENCE IMMEDIATELY.

SOIL STOCKPILE:
INSPECT SEDIMENT CONTROL BARRIERS (SILT FENCE OR HAY BALE) AND VEGETATION FOR DAMAGE EVERY SEVEN DAYS & AFTER EVERY RAIN EVENT. MAKE ALL REPAIRS IMMEDIATELY. REMOVE SEDIMENT FROM THE UP–SLOPE FACE OF THE SEDIMENT CONTROL BARRIER BEFORE IT ACCUMULATES TO A HEIGHT EQUAL TO 1/3 THE HEIGHT OF THE SEDIMENT CONTROL BARRIER. IF SEDIMENT CONTROL BARRIER TEARS, BEGINS TO DECOMPOSE, OR IN ANYWAY BECOMES INEFFECTIVE, REPLACE THE AFFECTED SECTION OF SEDIMENT CONTROL BARRIER IMMEDIATELY. REVEGETATE DISTURBED AREA TO STABILIZE SOIL STOCK PILE. REMOVE THE SEDIMENT CONTROL BARRIER WHEN THE SOIL STOCKPILE HAS BEEN REMOVED.

DUST CONTROL:
SCHEDULE CONSTRUCTION OPERATIONS TO MINIMIZE THE AMOUNT OF DISTURBED AREAS AT ANY ONE TIME DURING THE COURSE OF WORK. APPLY TEMPORARY SOIL STABILIZATION PRACTICES SUCH AS MULCHING, SEEDING, AND SPRAYING (WATER). STRUCTURAL MEASURES (MULCH, SEEDING) SHALL BE INSTALLED IN DISTURBED AREAS BEFORE SIGNIFICANT BLOWING PROBLEMS DEVELOP. WATER SHALL BE SPRAYED AS NEEDED. REPEAT AS NEEDED, BUT AVOID EXCESSIVE SPRAYING, WHICH COULD CREATE RUNOFF AND EROSION PROBLEMS.

CHECK DAM:
INSPECT CHECK DAMS EVERY SEVEN DAYS & AFTER EVERY RAIN EVENT. IF SIGNIFICANT SEDIMENT HAS OCCURRED BETWEEN STRUCTURES A LINER OF STONE OR OTHER SUITABLE MATERIAL SHOULD BE INSTALLED IN THAT PORTION OF THE CHANNEL. REMOVE SEDIMENT ACCUMULATED BEHIND THE DAM AS NEEDED TO ALLOW CHANNEL TO DRAIN. REPLACE THE STONE CHECK DAM AND PREVENT LARGE FLOWS FROM CARRYING SEDIMENT OVER THE DAM. REPLACE STONES AS NEEDED TO MAINTAIN THE DESIGN CROSS SECTION OF THE STRUCTURES. REMOVE CHECK DAMS AS PER APPROVAL OF ENGINEER.

EROSION CONTROL BLANKET:
INSPECT THE BLANKET EVERY SEVEN DAYS & AFTER EVERY RAIN EVENT. REPLACE WIRE STAPLES AS REQUIRED. REPAIR AND RESEED WHERE DAMAGE AND DAMAGED VEGETATION IS EVIDENT. WHEN DAMAGED BEYOND REPAIR OR NO LONGER FUNCTIONING, THE BLANKET SHALL BE REPLACED.

EARTH DIKE:
INSPECT ALL EARTH DIKES EVERY SEVEN DAYS & AFTER EVERY RAIN EVENT. ALL AREAS DAMAGED BY EROSION SHALL BE REPAIRED IMMEDIATELY.

TEMPORARY SWALE:
INSPECT ALL EARTH DIKES EVERY SEVEN DAYS & AFTER EVERY RAIN EVENT. ALL AREAS DAMAGED BY EROSION SHALL BE REPAIRED IMMEDIATELY.

SEDIMENT TRAP:
INSPECT ALL SEDIMENT TRAPS EVERY SEVEN DAYS & AFTER EVERY RAIN EVENT. REPAIRS SHALL BE MADE AS NEEDED. SEDIMENT SHALL

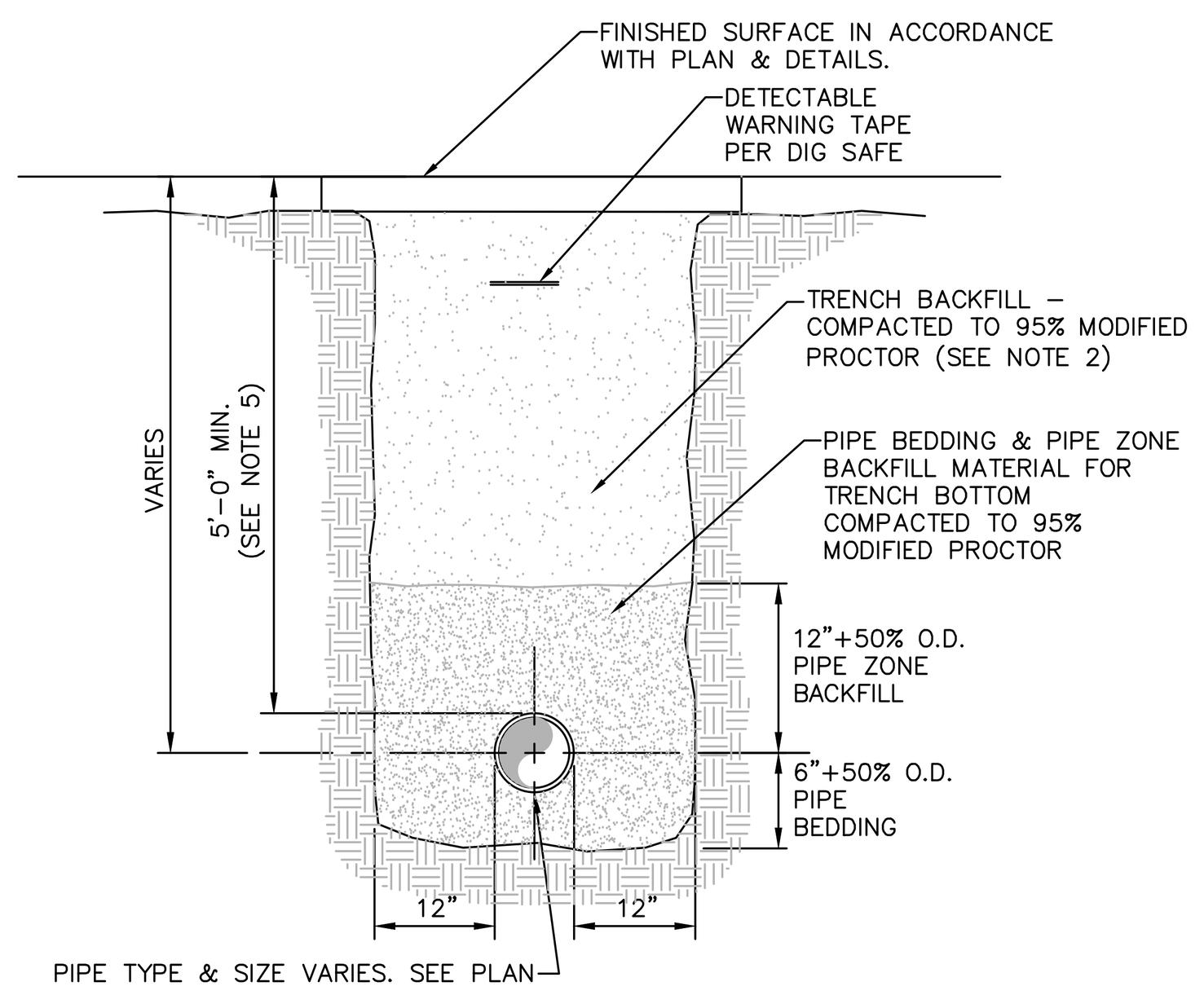

PIPE TYPE & SIZE VARIES. SEE PLAN

NOTES:

1. PIPE BEDDING & PIPE ZONE BACKFILL SHALL BE A NATURAL RUN–OF–BANK (R.O.B.) SAND OR A MIXTURE OF CRUSHED STONE AND GRAVEL, FREE OF SOFT, NONDURABLE PARTICLES, ORGANIC MATERIALS AND ELONGATED PARTICLES, AND SHALL BE WELL GRADED FROM FINE TO COARSE PARTICLES. BEDDING GRADATIONS SHALL BE APPROVED BY THE ENGINEER AND SHALL MEET THE FOLLOWING GRADATION REQUIREMENTS:

SIEVE DESIGNATION	% PASSING
3/4"	100%
NO. 40	0–70%
NO. 200	0–10%

2. TRENCH BACKFILL SHALL BE A NATURAL RUN–OF–BANK (R.O.B.) OR PROCESSED GRAVEL, OR EXCAVATED MATERIAL FREE OF SOFT, NONDURABLE PARTICLES, ORGANIC MATERIALS AND ELONGATED PARTICLES, AND SHALL BE WELL GRADED FROM FINE TO COARSE PARTICLES. TRENCH BACKFILL GRADATIONS SHALL BE APPROVED BY THE ENGINEER AND SHALL MEET THE FOLLOWING GRADATION REQUIREMENTS:

SIEVE DESIGNATION	% PASSING
4"	100%
NO. 40	0–70%
NO. 200	0–10%

IN NON–TRAFFIC UNPAVED AREAS TRENCH BACKFILL CAN BE MATERIALS EXCAVATED FROM THE TRENCH AS APPROVED BY THE ENGINEER AND COMPACTED TO 90% MODIFIED PROCTOR.

3. INSTALL CONTINUOUS DETECTABLE MARKING TAPE DURING BACKFILLING OF TRENCH FOR UNDERGROUND PIPING. LOCATE TAPE 12" BELOW FINISHED GRADE, DIRECTLY OVER PIPING, EXCEPT 6" BELOW SUBGRADE UNDER PAVEMENTS & SLAB.
4. TRENCHING SHALL BE IMPLEMENTED IN ACCORDANCE WITH O.S.H.A. STANDARDS.
5. 5'–0" MIN COVER SHALL BE APPLIED TO WATER MAIN OR SANITARY SEWER FORCE MAINS ONLY.

© 1 **PIPE TRENCH DETAIL (TYPICAL)**
SCALE: NOT TO SCALE

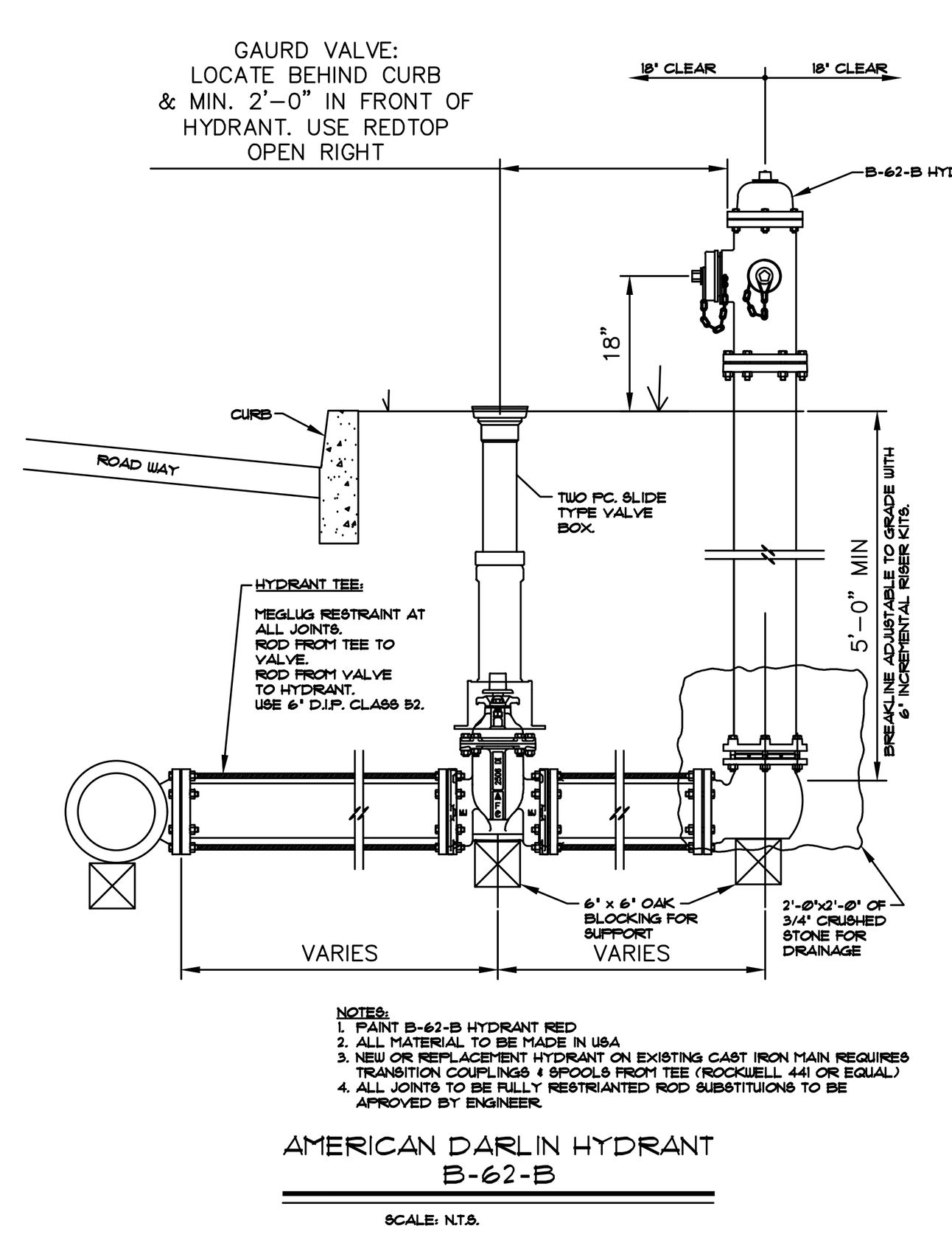

NOTES:

1. HYDRANTS SHALL BE **AMERICAN DARLIN B–62–B** OR APPROVED EQUIVALENT BY THE AUTHORITY HAVING JURISDICTION. HYDRANTS SHALL MEET REQUIREMENTS OF **AWWA STANDARD C–502**.
2. HYDRANTS SHALL BE CAST IRON BODY, DRY BARREL DESIGN, COMPRESSION–TYPE VALVE, OPENING AGAINST PRESSURE AND CLOSING WITH PRESSURE, 6–INCH MECHANICAL JOINT INLET FOOT PIECE, 5 ¼ INCH MAIN VALVE OPENING, O–RING TYPE PACKING, RATED FOR 250–PSI WORKING PRESSURE, TWO (2) 2 ½ INCH HOSE NOZZLES AND ONE (1) 4 ½ INCH PUMPER NOZZLE.
3. NOZZLE OUTLET THREADS SHALL MEET LOCAL FIRE DEPARTMENT REQUIREMENTS AND HAVE CAST IRON CAPS WITH NON–KINKING STEEL CHAINS. OPERATING AND CAP NUTS: PENTAGON 1 ½ INCH POINT TO FLAT. HYDRANT VALVES SHALL BE OPENED BY TURNING OPERATING NUT TO THE LEFT, OR **COUNTERCLOCKWISE**.
4. HYDRANTS SHALL BE TRAFFIC TYPE WITH BREAKABLE SAFETY FLANGE WITH RED EXTERIOR ALKYD GLOSS ENAMEL PAINT. HYDRANTS SHALL BE TOUCHED UP TO REMOVE ANY MARKS OR SCRAPED PAINT CAUSED BY INSTALLATION OR TRANSIT.

© 2 **HYDRANT ASSEMBLY DETAIL**
SCALE: NOT TO SCALE

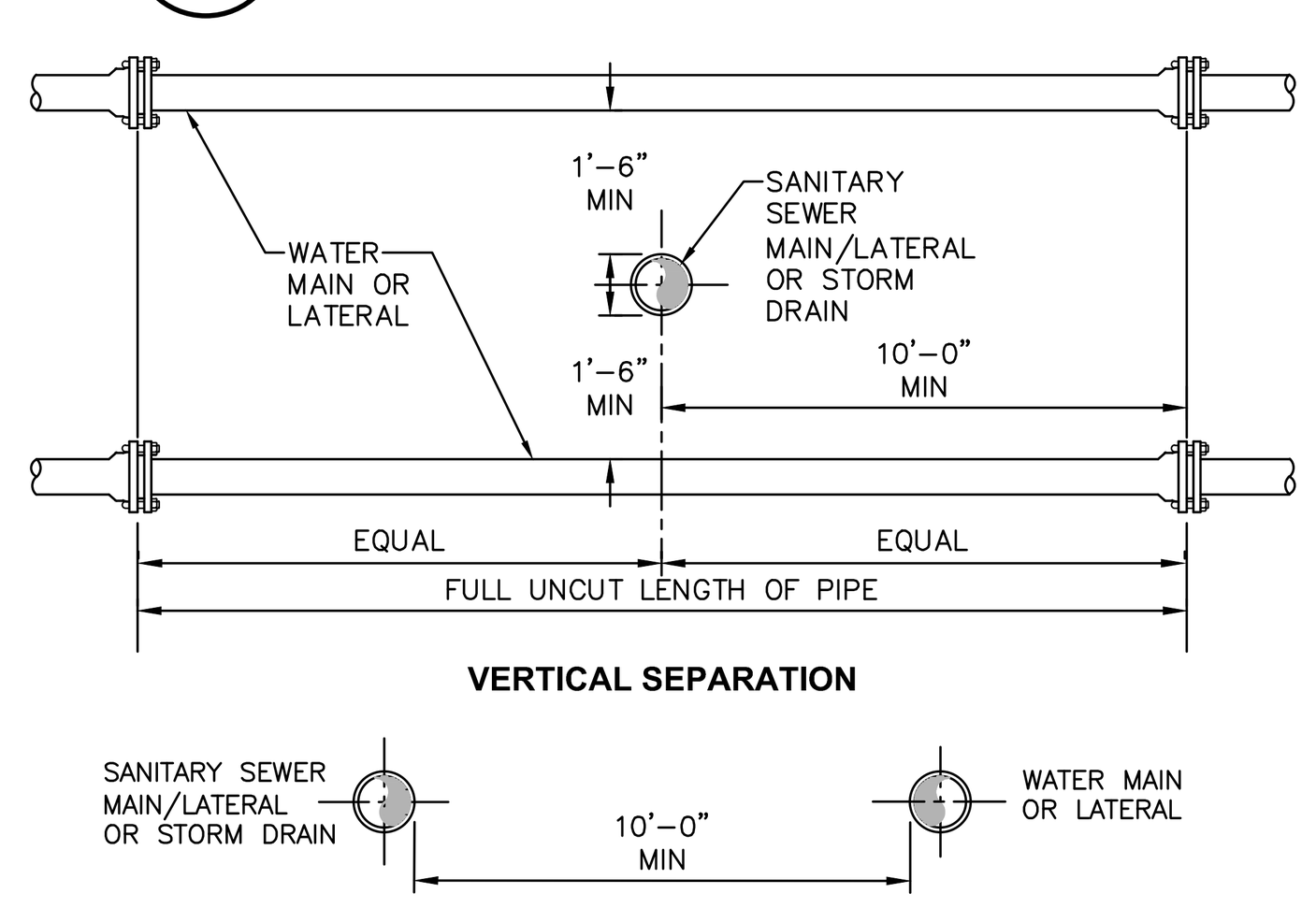

NOTES:

1. NO DEVIATION IN THE SEPARATION REQUIREMENTS WILL BE PERMITTED WITHOUT THE EXPRESS APPROVAL OF THE NYS HEALTH DEPARTMENT. OFFSETTING OF WATERLINE SHALL BE REQUIRED WHERE SEPARATION DISTANCES CANNOT BE MAINTAINED.
2. WHEN IT IS IMPOSSIBLE TO OBTAIN VERTICAL SEPARATION AS INDICATED ABOVE, BOTH THE WATER MAIN AND THE SEWER MAIN SHALL BE CONSTRUCTED OF MECHANICAL JOINT, DUCTILE IRON PIPE OR PVC WATER WORKS GRADE PRESSURE PIPE FOR 10' EACH SIDE OF CROSSING AND SHALL BE PRESSURE TESTED TO **150psi** TO ASSURE WATER TIGHTNESS.

© 3 **SANITARY/STORM SEWER AND WATERMAIN SEPARATION DETAIL**
SCALE: NOT TO SCALE

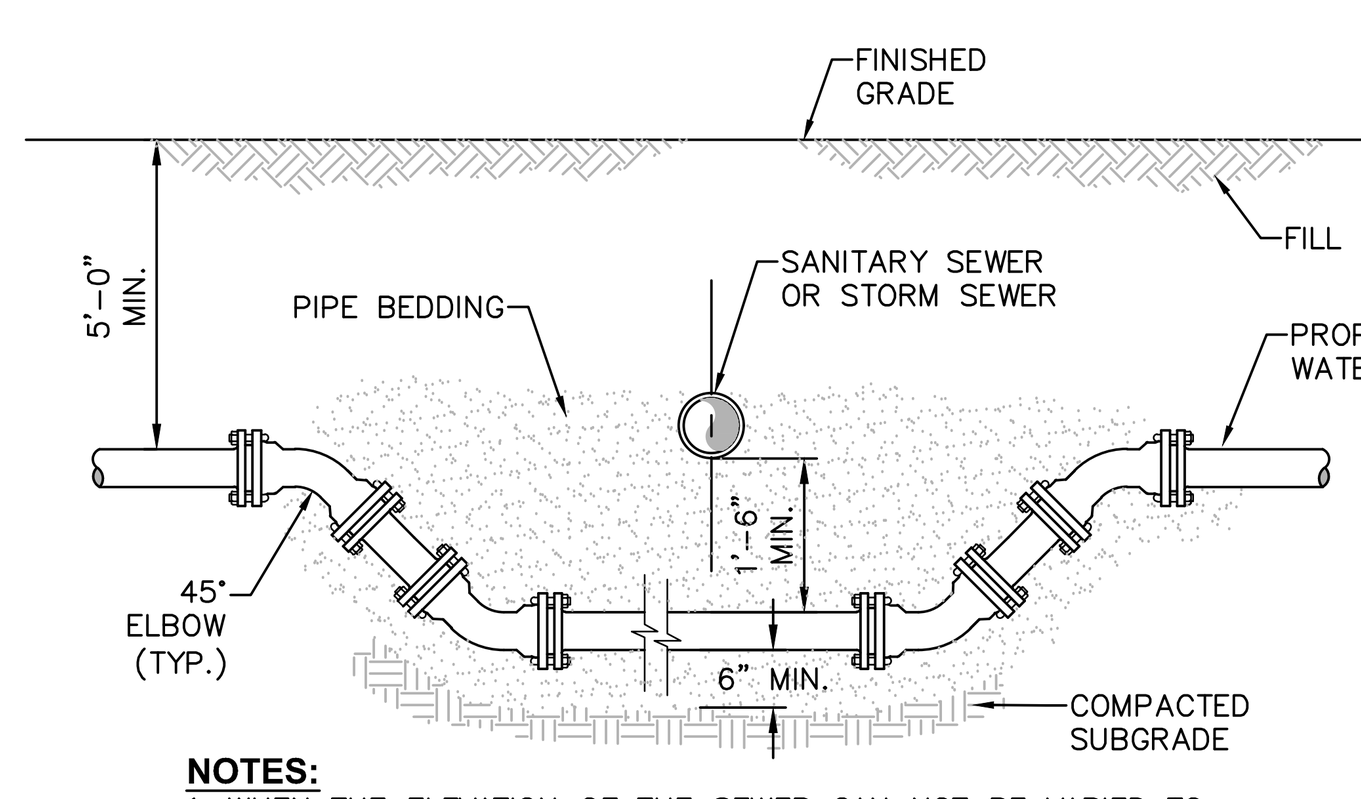

NOTES:

1. WHEN THE ELEVATION OF THE SEWER CAN NOT BE VARIED TO MEET THE ABOVE REQUIREMENTS, THE WATER MAIN SHALL BE RELOCATED TO PROVIDE THIS REQUIRED SEPARATION.
2. WHEN IT IS IMPOSSIBLE TO OBTAIN VERTICAL SEPARATION AS INDICATED ABOVE, BOTH THE WATER MAIN AND THE SEWER MAIN SHALL BE CONSTRUCTED OF MECHANICAL JOINT DUCTILE IRON PIPE OR PVC WATER WORKS GRADE PRESSURE PIPE FOR 10' EACH SIDE OF CROSSING AND SHALL BE PRESSURE TESTED TO **150psi** TO ASSURE WATER TIGHTNESS.

© 4 **WATERLINE OFFSET DETAIL**
SCALE: NOT TO SCALE

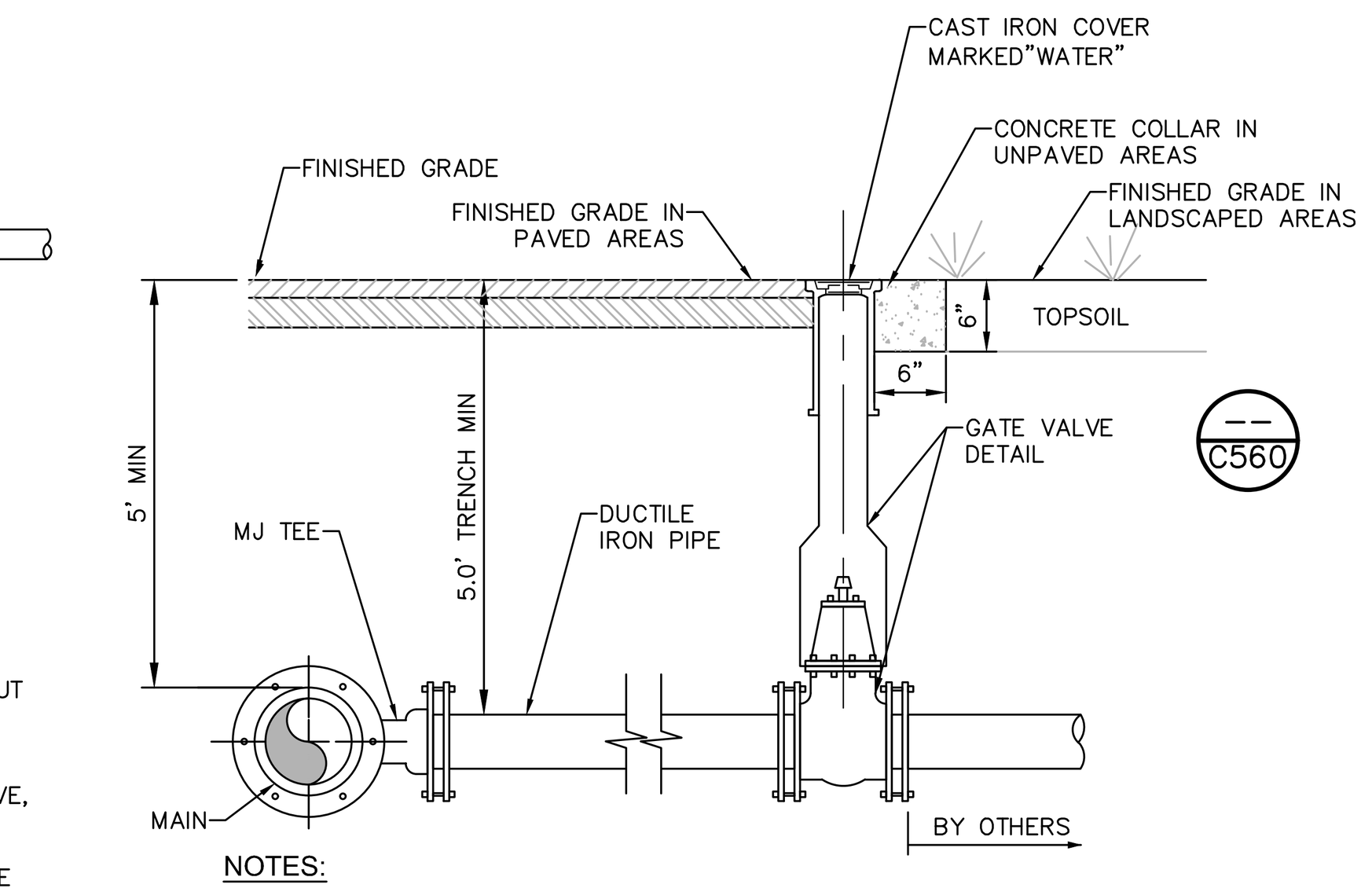

NOTES:

1. GATE VALVE & VALVE BOX SHALL BE IN ACCORDANCE WITH MUNICIPAL STANDARDS & AS MANUFACTURED BY **(MUELLER, CLOW OR WATEROUS)** OR APPROVED EQUIVALENT.

© 5 **DUCTILE IRON SERVICE PIPE**
SCALE: NOT TO SCALE

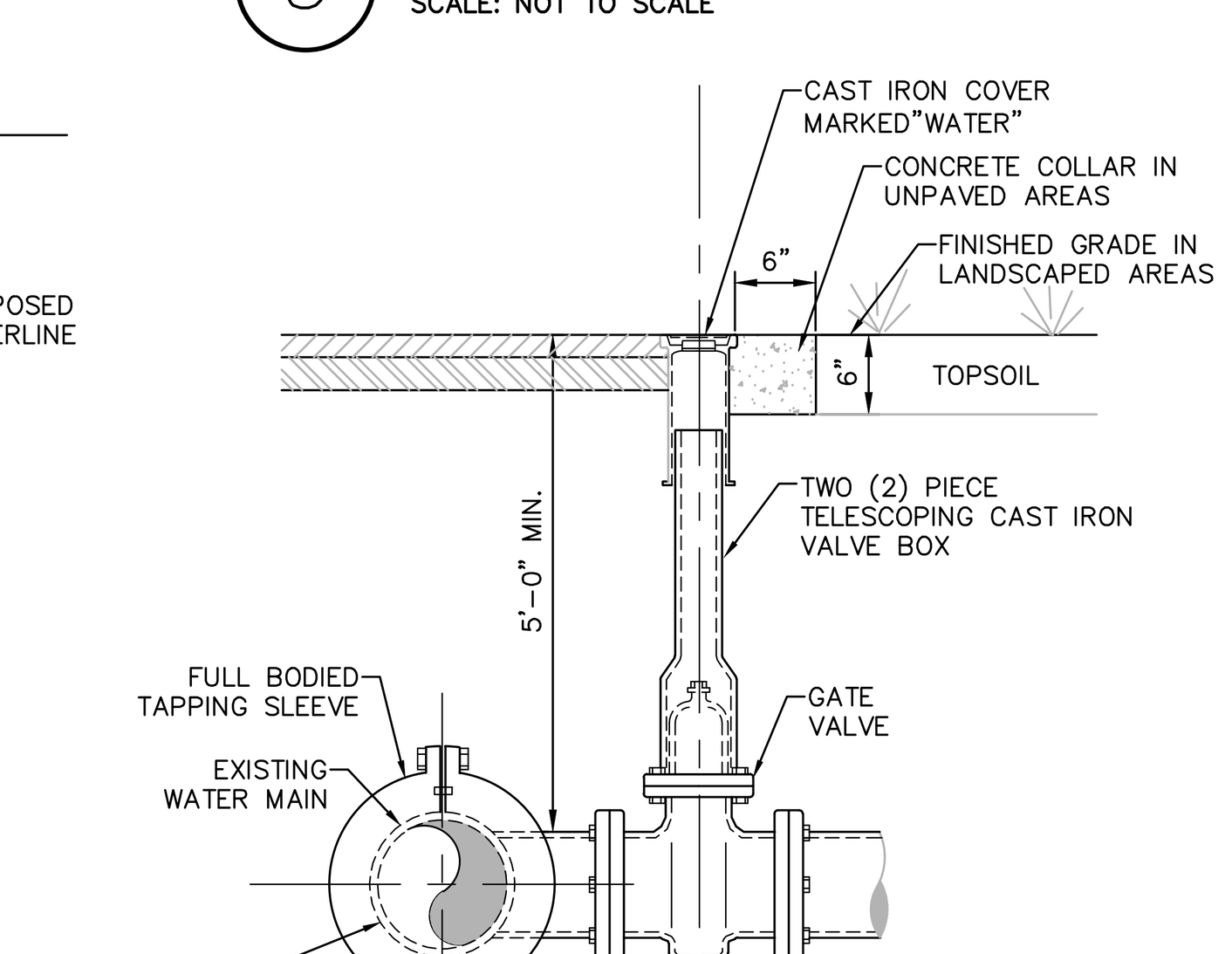

NOTES:

1. WET TAP OF PUBLIC WATER MAIN SHALL BE PERFORMED UNDER THE SUPERVISION OF THE ENGINEER, AND THE AUTHORITY HAVING JURISDICTION.
2. TAPPING SLEEVE AND VALVE SUPPORT SHALL BE COORDINATED WITH THE ENGINEER TO SUIT FIELD CONDITIONS.
3. MINIMUM DISTANCE TO JOINTS, FITTINGS, OR OTHER WET TAPS OR STOPS SHALL BE 3 FEET.
4. VALVE OPERATING DIRECTION SHALL BE **COUNTERCLOCKWISE** TO OPEN (TURNING LEFT).
5. TAPPING SLEEVE SHALL BE SELECTED TO FIT EXISTING PIPE MATERIAL (C.I., D.I., A.C.) AND OUTSIDE DIAMETERS.
6. THRUST BLOCK IS REQUIRED WHERE THE BRANCH OF THE TAPPING SLEEVE DOES NOT HAVE RESTRAINED JOINT.
7. TAPPING SLEEVE, VALVE & VALVE BOX SHALL BE IN ACCORDANCE WITH MUNICIPAL STANDARDS & AS MANUFACTURED BY **(MUELLER, CLOW OR WATEROUS)** OR APPROVED EQUIVALENT.

© 6 **TAPPING SLEEVE AND VALVE DETAIL**
SCALE: NOT TO SCALE

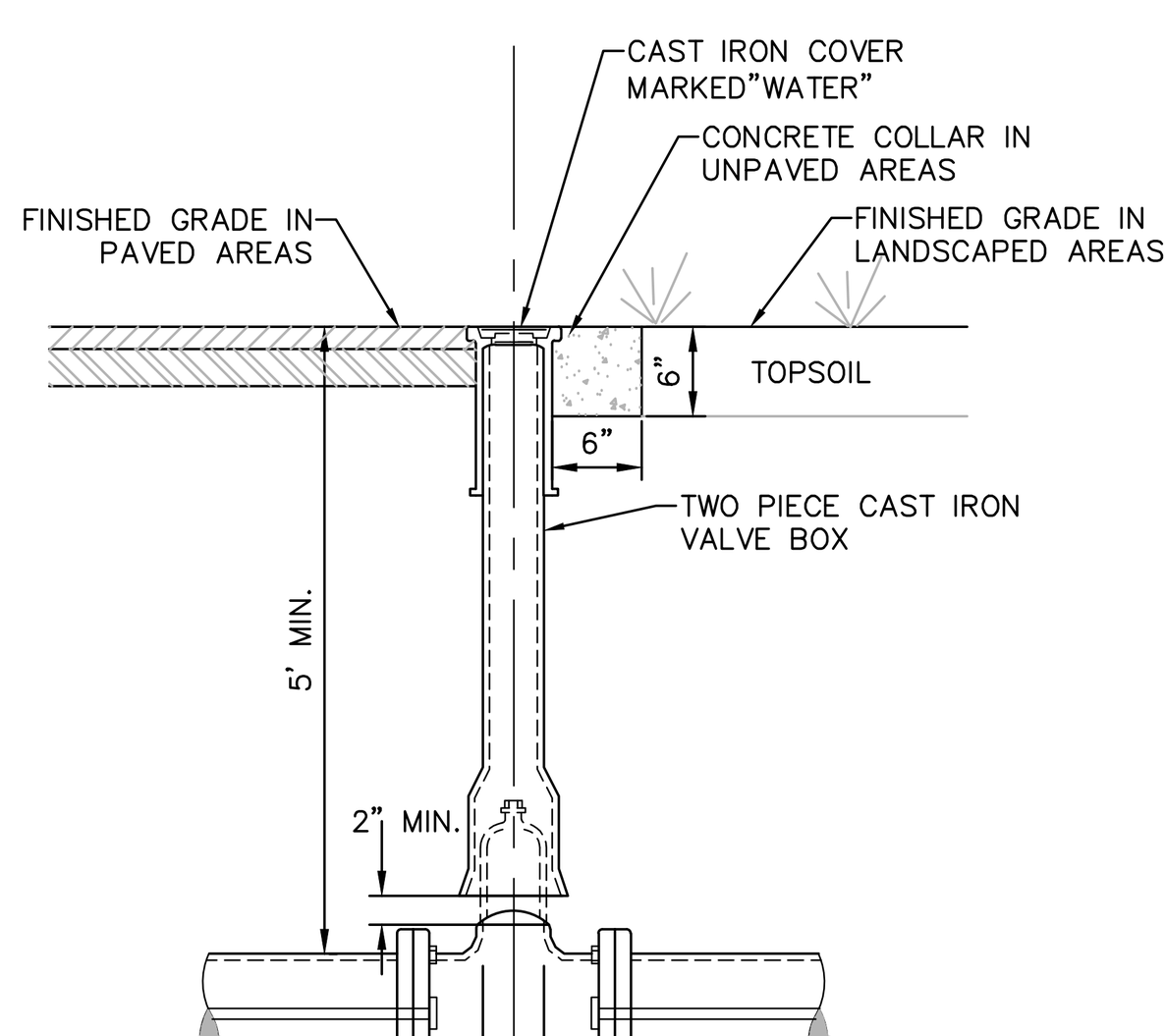

NOTES:

1. NON–RISING STEM GATE VALVE, OPERATING DIRECTION SHALL BE **COUNTERCLOCKWISE** TO OPEN.
2. MINIMUM DISTANCE TO JOINTS, FITTINGS, OR OTHER WET TAPS OR STOPS SHALL BE 3 FEET.
3. IF VALVE IS TO BE RODDED, PROVIDE VALVE WITH RODDING FLANGES OR EYEBOLTS. TWO (2) 3/4"ø GALVANIZED STEEL RODS WITH MALLEABLE IRON NUTS AT 180° SPACING SHALL BE USED FOR RODDING VALVES. FOR 12" DIA. PIPE OR LESS. FOR LARGER PIPE SIZES, SEE TABLE FOR NUMBER OF TIE RODS REQUIRED–"JOINT RESTRAINT OPTION DETAILS.)
4. GATE VALVE & VALVE BOX SHALL BE IN ACCORDANCE WITH MUNICIPAL STANDARDS & AS MANUFACTURED BY **(MUELLER, CLOW OR WATEROUS)** OR APPROVED EQUIVALENT.

© 7 **TYPICAL GATE VALVE DETAIL**
SCALE: NOT TO SCALE

SCHEDULE OF JOINT RESTRAINT BARE DIP (NOT POLYWRAPPED)
(LENGTH OF PIPE EACH SIDE OF FITTING TO BE RESTRAINED IN FEET "L")

PIPE SIZE (INCHES)	FITTING TYPE													
	90°	45°	22½°	11¼°	TEE	VALVE	DEAD END	REDUCER 6"	8"	10"	12"	16"	18"	24"
6"	43	18	8	4	29	31	31							
8"	56	23	11	5	38	41	41	17						
10"	68	28	14	7	48	50	50	31	17					
12"	81	34	16	8	57	59	59	43	31	17				
16"	106	44	21	10	76	78	78	66	57	46	33			
18"	119	49	24	12	85	88	88		69	59	48	18		
24"	156	65	31	15	116	116	116				86	63	50	
30"	192	80	38	19	142	144	144						91	50

NOTES:

1. THE LENGTH OF PIPE REQUIRING RESTRAINT IS BASED UPON THE FOLLOWING ASSUMPTIONS:

   A. BEDDING TYPE 2 – FLAT BOTTOM TRENCH, BACKFILL LIGHTLY CONSOLIDATED TO CENTER LINE OF PIPE.
   B. SOIL TYPE CLAY 1 – CLAY OF MEDIUM TO LOW PLASTICITY, LL<50, <25% COURSE PARTICLES [CL & CL–ML] :

   CL – INORGANIC CLAYS OF LOW TO MEDIUM PLASTICITY GRAVELY CLAYS, SANDY CLAYS, SILTY CLAYS. LEAN CLAYS
   ML – INORGANIC SILTS, VERY FINE SAND, ROCK FLOUR, SILTY OR CLAYEY FINE SANDS.

   C. PIPE IS BARE DUCTILE IRON PIPE (NOT POLYWRAPPED)
   D. DEPTH TO TOP OF PIPE 5'–0" MINIMUM
   E. MAXIMUM OPERATING PRESSURE OF 150 PSI
   F. FACTOR OF SAFETY OF 1.5

2. FOR END PLUGS, RESTRAIN PIPE LENGTH GIVEN FOR DEAD END FITTING.
3. THE LENGTH OF NEW PIPE TO BE RESTRAINED IS THE LENGTH FOR EACH SIDE OF THE FITTING.
4. THE ABOVE INFORMATION WAS PROVIDED USING THE THRUST RESTRAINT PROGRAM ISSUED BY THE DUCTILE IRON PIPE RESEARCH ASSOCIATION (DIPRA) AND IS BASED ON THE ASSUMPTIONS LISTED IN NOTE 1. RESTRAINED LENGTH REQUIREMENTS FOR FIELD CONDITIONS AND PIPE SIZES DIFFERING FROM THOSE LISTED ABOVE SHOULD BE EVALUATED SEPARATELY.
5. RESTRAINED JOINT PIPE AND FITTINGS SHALL BE USED ONLY AS ALLOWED BY THE PROJECT PLANS AND/OR SPECIFICATION.

© 10 **JOINT RESTRAINT SCHEDULE AND NOTES**
SCALE: NOT TO SCALE

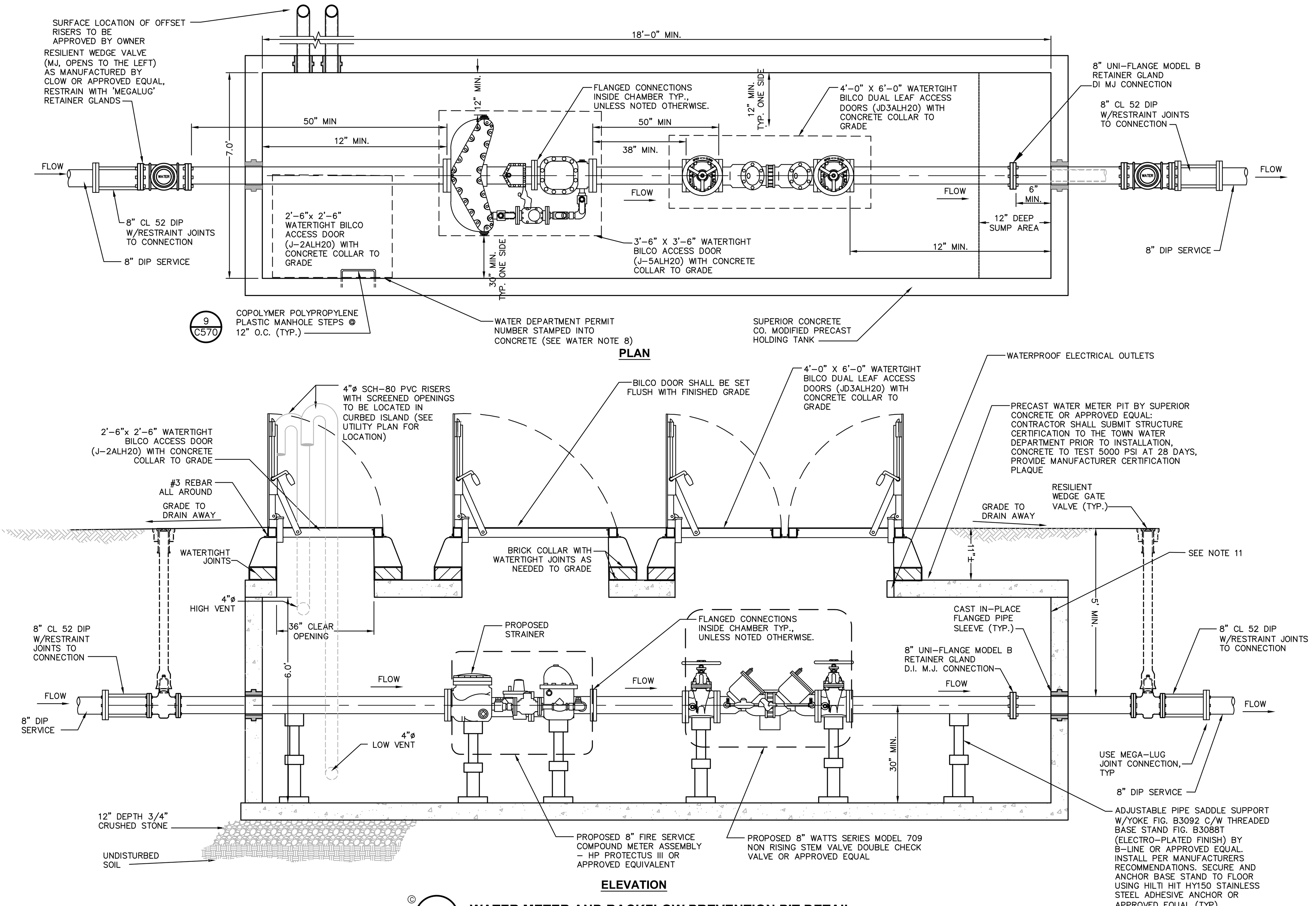

© 8 **WATER METER AND BACKFLOW PREVENTION PIT DETAIL**
SCALE: NOT TO SCALE

NOTES

1. WATER METER PIT AND ASSEMBLY SHALL BE SUBJECT TO REVIEW AND FINAL APPROVAL BY THE CITY OF POUGHKEEPSIE WATER DEPARTMENT. WATER METER SHALL BE A SENSUS OMNI OR APPROVED EQUAL.
2. WATER METER SHALL BE PROVIDED WITH A REMOTE READING SYSTEM WITH BRONZE WATERTIGHT ENCLOSURE. WATER PROOF REGISTERS SHALL BE PROVIDED. LOCATION SHALL BE APPROVED BY THE CITY OF POUGHKEEPSIE WATER DEPARTMENT PRIOR TO CONSTRUCTION.
3. AN ALUMINUM WARNING PLATE SHALL BE RIVETED OR OTHERWISE PERMANENTLY ATTACHED TO THE MANHOLE COVER. THE PLATE SHALL BE A MINIMUM OF 12"x12" AND SHALL BE ENGRAVED WITH THE FOLLOWING LANGUAGE: "WARNING: CONFINED SPACE – ENTRY PROHIBITED WITHOUT AUTHORIZATION – CALL OWNER FOR APPROVAL TO ACCESS". VENTILATION SHALL CONFORM TO EXISTING LOCAL AND/OR STATE CODES AND AS PER SECTION 6.2.5 OF "RECOMMENDED STANDARDS FOR WATER WORKS – 1997" (TEN STATES STANDARDS).
4. PREPARED SURFACE (I.E., BOTTOM) OF EXCAVATION FOR PLACEMENT OF WATER METER PIT SHALL CONSIST OF A MINIMUM 6" DEPTH OF 3/4" CRUSHED STONE, LEVELED AND LAID OVER STABLE NATIVE SOIL. IF EXCAVATION REVEALS UNSTABLE SOIL MATERIAL, THIS BEDDING REQUIREMENT SHALL BE MODIFIED BY THE PROJECT ENGINEER.
5. WHEN INSTALLING TURBO METERS WITH A STRAINER, A MINIMUM OF FIVE (5) PIPE DIAMETERS OF STRAIGHT RUN PIPE OR EQUIVALENT FULL OPEN COMPONENTS IS REQUIRED UPSTREAM OF THE METER INLET FLANGE. A MINIMUM OF THREE (3) PIPE DIAMETERS OF STRAIGHT PIPE OR EQUIVALENT IS REQUIRED DOWN STREAM OF THE METER.
6. DO NOT INSTALL ELBOWS, BENDS, NONCONCENTRIC REDUCERS, CHECK VALVES, BACK FLOW PREVENTORS AND/OR PERSSURE REDUCING DEVICES WITHIN TEN (10) PIPE DIAMETERS UPSTREAM OR FIVE (5) PIPE DIAMETERS DOWNSTREAM OF THE METER.
7. EXTERIOR OF METER PIT SHALL RECEIVE TWO COATS OF BITUMINOUS COATING.
8. WITHIN 30 DAYS OF INSTALLATION, THE BACKFLOW PREVENTION DEVICE SHALL BE TESTED BY A CERTIFIED TESTER. FOLLOWING TESTING, A NYS DOH–1013 REPORT MUST BE COMPLETED AND SUBMITTED TO THE CITY OF POUGHKEEPSIE, TOWN CLERK AND DUTCHESS COUNTY HEALTH DEPARTMENT TO CERTIFY THAT DEVICE WAS INSTALLED PER APPROVED PLANS.
9. ALL BACKFLOW PREVENTION DEVICES MUST BE TESTED AT LEAST ANNUALLY BY A NYS CERTIFIED TESTER WITH A COPY OF THE INSPECTION AND TEST REPORT (DOH–1013) FORWARDED TO CITY OF POUGHKEEPSIE, AND THE DUTCHESS COUNTY DEPARTMENT OF HEALTH.
10. REINFORCEMENT FOR MANHOLE COMPONENTS SHALL BE DESIGNED BY A LICENSED NEW YORK STATE PROFESSIONAL ENGINEER PRIOR TO CONSTRUCTION. SHOP DRAWINGS SHALL BE SUBMITTED FOR REVIEW. STRUCTURE SHALL BE DESIGNED FOR HS20–44 VEHICULAR LOADING PLUS 25% IMPACT.
11. PROVIDE WATERPROOF ELECTRIC OUTLET FOR SUMP PUMP IN THE EVENT WATER ACCUMULATES IN SUMP AREA.

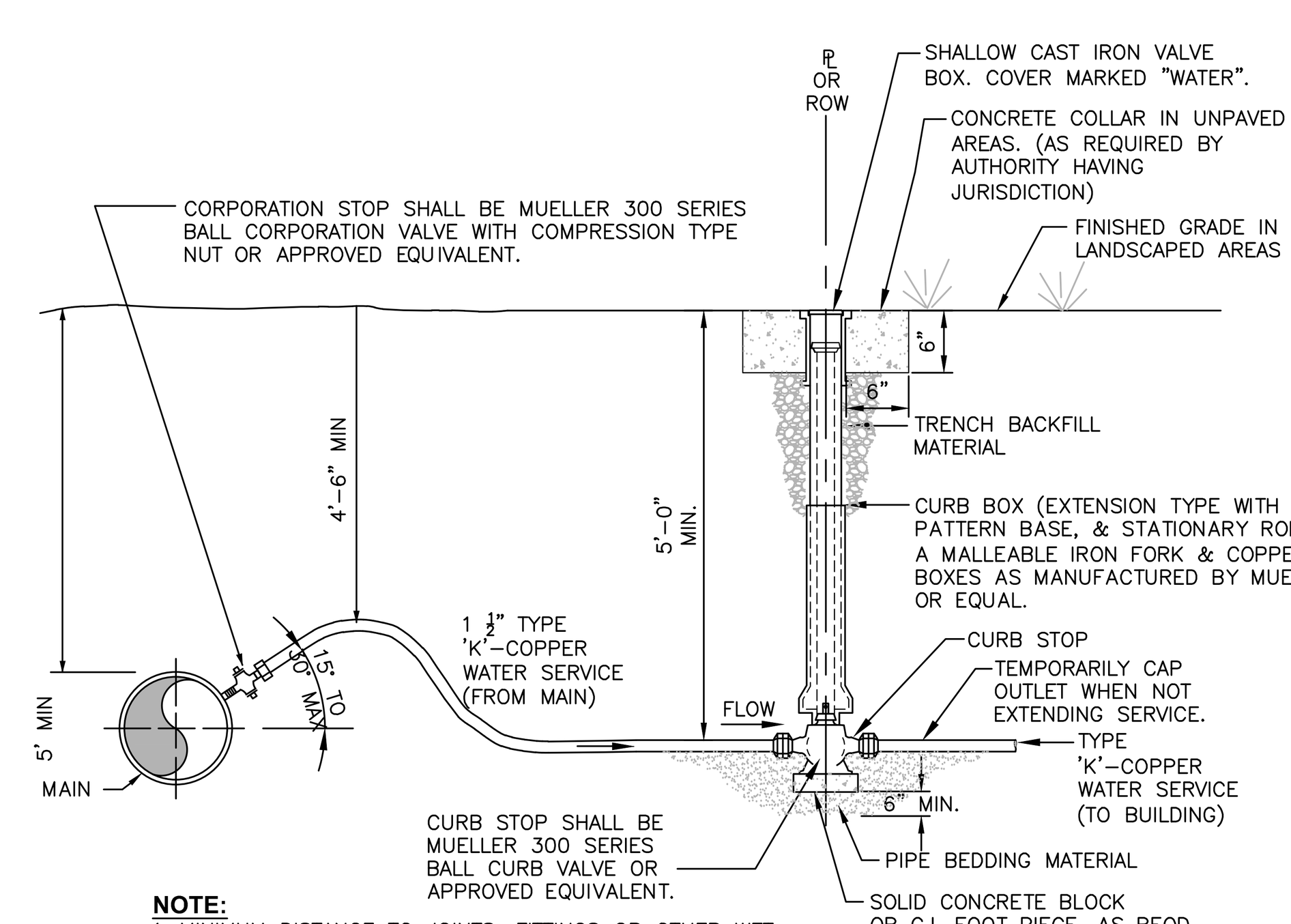

NOTE:

1. MINIMUM DISTANCE TO JOINTS, FITTINGS OR OTHER WET TAPS OR STOPS SHALL BE MAINTAINED IN ACCORDANCE WITH REGULATORY AGENCY.

© 9 **COPPER WATER SERVICE**
SCALE: NOT TO SCALE

LaBella
Powered by partnership.

21 Fox Street
Poughkeepsie, NY 12601
845-454-3980
labellapc.com

NOT FOR CONSTRUCTION
EXP: ##/##/20## EXP: ##/##/20##

CERTIFICATE OF AUTHORIZATION NUMBER:
PROFESSIONAL ENGINEERING: 0021272
LAND SURVEYING: 0021271
GEOLOGICAL: 0021659

It is a violation of New York Education Law Art. 145 Sec. 7209 & Art. 147 Sec. 7307, for any person, unless acting under the direction of a licensed architect, professional engineer, or land surveyor, to alter an item in any way. If an item bearing the seal of an architect, engineer, or land surveyor is altered; the altering architect, engineer, or land surveyor shall affix to the item their seal and notation "altered by" followed by their signature and date of such alteration, and a specific description of the alteration.

© 2025 LaBella Associates

MASELO REALTY LLC
18 EASTVIEW ROAD
MONSEY, NY 10952

HIGHVIEW AT THE FALLKILL CREEK
CITY OF POUGHKEEPSIE
DUTCHESS COUNTY, NEW YORK

NO:	DATE:	DESCRIPTION:
Revisions		

PROJECT NUMBER: CZ81947.00
DRAWN BY: JRR
REVIEWED BY: KGA
ISSUED FOR: PLANNING BOARD REVIEW
DATE: 10/28/2025
DRAWING NAME: **WATER DETAILS 1**
DRAWING NUMBER: **C560**

Drawing Name: B:\GLOBAL\Legacy\Chazen\Projects\81900-81999\81947.00 - Highview II\DWG\01_C560_81747-00_WATRD.dwg
Xref's Attached: X-BORDER_81947-00_30x42
Date Printed: Oct 27, 2025, 4:26pm

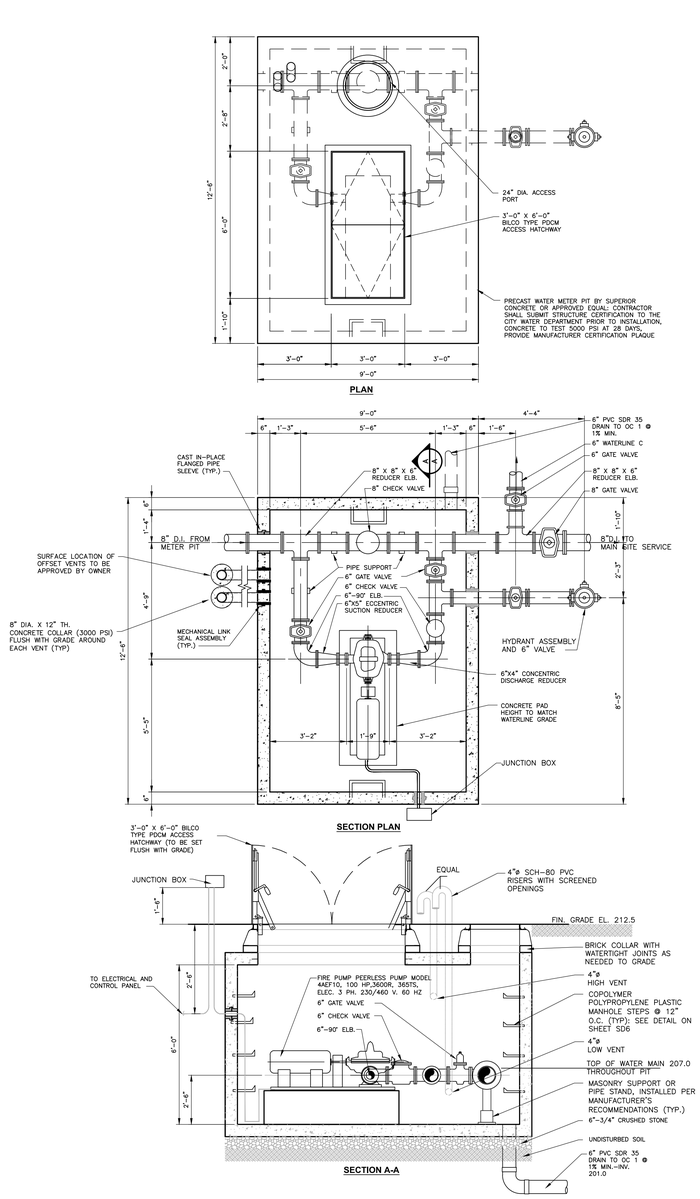

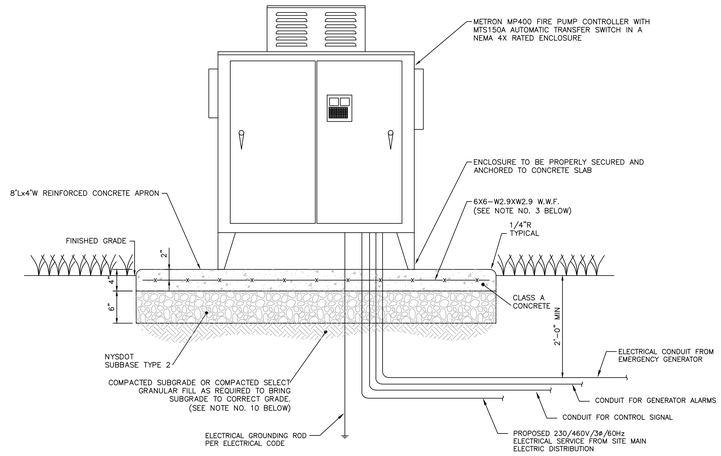

1. THE METRON COMBINATION FIRE PUMP CONTROLLER/TRANSFER SWITCH IS A METRON MODEL MP400 WITH INTEGRATED MTS150A AUTOMATIC TRANSFER SWITCH IN A NEMA 4X RATED ENCLOSURE. THE UNIT IS UNDERWRITER'S LABORATORIES (UL) AND FACTORY MUTUAL (FM) APPROVED AND MEETS ALL THE REQUIREMENTS OF NFPA FOR CENTRIFUGAL FIRE PUMPS.

2. THE CONTROLLER/TRANSFER SWITCH UNIT SHALL BE MANUFACTURED BY METRON, INC. AND BE EQUIPPED WITH ALL THE FEATURES DESCRIBED IN THE ENGINEER'S REPORT. THE UNIT PROVIDES OPERATION OF THE ELECTRIC FIRE PUMP MOTOR FROM AN ALTERNATE SOURCE WHEN THE NORMAL POWER SOURCE FAILS.

3. THE FIRE PUMP IS A PEERLESS HORIZONTAL SPLIT CASE SINGLE STAGE FIRE PUMP MODEL 4AEF10 EQUIPPED WITH A 3550 RPM, 3PH, 230/460V, 60 HZ ELECTRIC MOTOR; THE PUMP SHALL BE EQUIPPED WITH ALL ANCILLARY ACCESSORIES DESCRIBED IN THE ENGINEER'S REPORT.

4. THE EMERGENCY GENERATOR SET SHALL BE A KOHLER MODEL 230REOZJB, 230 KW, DIESEL UNIT WITH SOUND ATTENUATED ENCLOSURE AND DUAL-WALL SUB-BASE TANK, OR APPROVED EQUAL. THE GENETAROR IS TO BE EQUIPPED WITH ALL FEATURES DESCRIBED IN THE ENGINEER'S REPORT.

5. THIS DETAIL IS PROVIDED TO ILLUSTRATE THE INTENDED LAYOUT. THE CONTRACTOR SHALL PROVIDE SHOP DRAWINGS SHOWING THE ARRANGEMENT AND LOCATIONS OF ALL COMPONENTS, CONDUITS AND EQUIPMENT FOR THE FIRE PUMP CONTROLLER/AUTO TRANSFER SWITCH UNIT FOR A COMPLETE AND FUNCTIONAL INSTALLATION.

6. THE CONTRACTOR SHALL SUBMIT A COPY OF THE SHOP DRAWINGS TO THE CITY OF POUGHKEEPSIE ENGINEER FOR REVIEW.

7. THE INSTALLATION SHALL COMPLY WITH ALL LOCAL, STATE AND NEC ELECTRICAL CODE AND NFPA REQUIREMENTS.

8. INSTALL ALL WIRING IN RIGID GALV. STEEL CONDUITS.

9. ALL WIRING SHALL BE ADEQUATELY SIZED TO CARRY REQUIRED LOADS AS PER ELECTRICAL CODES.

2 ELECTRIC FIRE PUMP CONTROLLER AND AUTO-TRANSFER SWITCH
SCALE: NOT TO SCALE

CONCRETE NOTES:

1. MATERIAL AND METHODS OF CONSTRUCTION SHALL BE IN CONFORMANCE WITH THE NEW YORK STATE DEPARTMENT OF TRANSPORTATION (NYSDOT) STANDARD SPECIFICATIONS FOR CONSTRUCTION AND MATERIALS, DATED JANUARY 2, 2002, AND ALL ADDENDA THERETO; THE ONLY EXCEPTION BEING THAT THE WORK OF THIS CONTRACT SHALL BE MEASURED IN ENGLISH UNITS.
2. ALL CONCRETE SHALL BE CLASS A CONCRETE. CONCRETE MATERIALS, PLACEMENT, AND CONSTRUCTION SHALL CONFORM WITH SECTION 500 OF THE ABOVE REFERENCED NYSDOT STANDARD SPECIFICATIONS.
3. REINFORCING STEEL FOR CONCRETE SHALL CONFORM WITH SECTION 556 – REINFORCING STEEL FOR CONCRETE STRUCTURES OF THE ABOVE REFERENCED NYSDOT STANDARD SPECIFICATIONS AND AS SPECIFICALLY CALLED OUT IN THE DRAWINGS.
4. ALL EXPOSED SURFACED SHALL HAVE A BROOM TEXTURED FINISH.
5. EXPANSION JOINTS SHALL BE LOCATED A MAXIMUM OF 20'-0" ON CENTER, OR AS INDICATED ON PLANS.
6. JOINTS SHALL NOT BE SAW CUT.
7. EXPOSED CONCRETE SURFACES SHALL BE TREATED WITH "SUREBOND"/"SAFEBOND" SB-7000 INTENSIFIER BRIGHT PROTECTOR AND SIDEWALK SEALER, OR EQUAL. RATE AND METHOD OF APPLICATION SHALL BE IN ACCORDANCE WITH MANUFACTURE'S RECOMMENDATIONS.
8. SUBBASE MATERIAL SHALL CONFORM WITH SECTION 304 OF THE ABOVE REFERENCED NYSDOT STANDARD.
9. WHERE IT IS NECESSARY TO PLACE FILL FOR PURPOSE OF BRINGING THE SUBGRADE ELEVATION UP TO A SPECIFIED GRADE, THE FILL MATERIAL PLACED SHALL BE IN CONFORMATION WITH SECTION 203-EXCAVATION AND EMBANKMENT OF THE ABOVE REFERENCED NYSDOT STANDARD SPECIFICATIONS.
10. ALL WORK SHALL CONFORM WITH SECTION 608-SIDEWALK, DRIVEWAYS, AND BICYCLE PATHS OF THE ABOVE REFERENCED NYSDOT STANDARD SPECIFICATIONS.

NOTES

1. PUMP CHAMBER AND ASSEMBLY AND SHOP DRAWINGS SHALL BE SUBJECT TO REVIEW AND FINAL APPROVAL BY THE CITY OF POUGHKEEPSIE ENGINEERING DEPARTMENT.
2. FIRE PUMP FURNISHED FOR FIRE PROTECTION SERVICE SHALL BE SUPPLIED WITH SPECIFIED DRIVERS, CONTROLS AND PUMP ACESSORIES AS DESCRIBED IN APPENDIX TO ENGINEERING REPORT
3. AN ALUMINUM WARNING PLATE SHALL BE RIVETED OR OTHERWISE PERMANENTLY ATTACHED TO THE MANHOLE COVER. THE PLATE SHALL BE A MINIMUM OF 12"x12" AND SHALL BE ENGRAVED WITH THE FOLLOWING LANGUAGE: "WARNING: CONFINED SPACE – ENTRY PROHIBITED WITHOUT AUTHORIZATION – CALL OWNER FOR APPROVAL TO ACCESS". VENTILATION SHALL CONFORM TO EXISTING LOCAL AND/OR STATE CODES AND AS PER SECTION 6.2.5 OF "RECOMMENDED STANDARDS FOR WATER WORKS – 1997" (TEN STATES STANDARDS).
4. PREPARED SURFACE (I.E., BOTTOM) OF EXCAVATION FOR PLACEMENT OF PUMP CHAMBER SHALL CONSIST OF A MINIMUM 9" DEPTH OF 3/4" CRUSHED STONE, LEVELED AND LAID OVER STABLE NATIVE SOIL. IF EXCAVATION REVEALS UNSTABLE SOIL MATERIAL, THIS BEDDING REQUIREMENT SHALL BE MODIFIED BY THE PROJECT ENGINEER.
5. FIRE PUMP PIT TO BE PROVIDED WITH STEPS.
6. ALL ELECTRICAL SHALL BE INSTALLED AS PER THE NATIONAL ELECTRIC CODE, LATEST EDITION.
7. INSTALLATION AND TESTING TO BE CERTIFIED COMPLETE BY A NYS LICENSED PROFESSIONAL ENGINEER.

1 PUMP CHAMBER DETAIL
SCALE: NOT TO SCALE

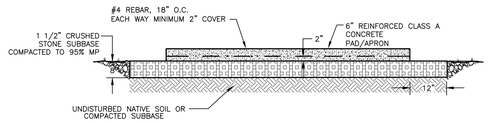

NOTES:

1. THE CONCRETE PAD DIMENSIONS SHALL BE 16'Lx10'W.
2. THE CONTRACTOR SHALL MAKE PROVISIONS TO PROVIDE ALL SLEEVES REQUIRED FOR THE PASSAGE OF ALL CONDUITS IN THE CONCRETE SLAB.

3 GENERATOR PAD DETAIL
SCALE: NOT TO SCALE

LaBella Powered by partnership.
21 Fox Street
Poughkeepsie, NY 12601
845-454-3980
labellapc.com

NOT FOR CONSTRUCTION
EXP. ##/##/20## EXP. ##/##/20##

CERTIFICATE OF AUTHORIZATION NUMBER:
PROFESSIONAL ENGINEERING: 0021272
LAND SURVEYING: 0021271
GEOLOGICAL: 0021659

It is a violation of New York Education Law Art. 145 Sec. 7209 & Art. 147 Sec. 7307, for any person, unless acting under the direction of a licensed architect, professional engineer, or land surveyor, to alter an item in any way. If an item bearing the seal of an architect, engineer, or land surveyor is altered; the altering architect, engineer, or land surveyor shall affix to the item their seal and notation "altered by" followed by their signature and date of such alteration, and a specific description of the alteration.

© 2025 LaBella Associates

MASELO REALTY LLC
18 EASTVIEW ROAD
MONSEY, NY 10952

HIGHVIEW AT THE FALLKILL CREEK
CITY OF POUGHKEEPSIE
DUTCHESS COUNTY, NEW YORK

NO:	DATE:	DESCRIPTION:
Revisions		

PROJECT NUMBER: CZ81947.00
DRAWN BY: JRR
REVIEWED BY: KGA
ISSUED FOR: PLANNING BOARD REVIEW
DATE: 10/28/2025
DRAWING NAME:

WATER DETAILS 2

DRAWING NUMBER:

C561

Drawing Name: B:\GLOBAL\Legacy\Chazen\Projects\81900-81999\81947.00 - Highview II\DWG\01_C561_81741-00_WATR2.dwg
Xref's Attached: 1-BORDER_81947-00_30x42
Date Printed: 10/27/2025 4:06pm

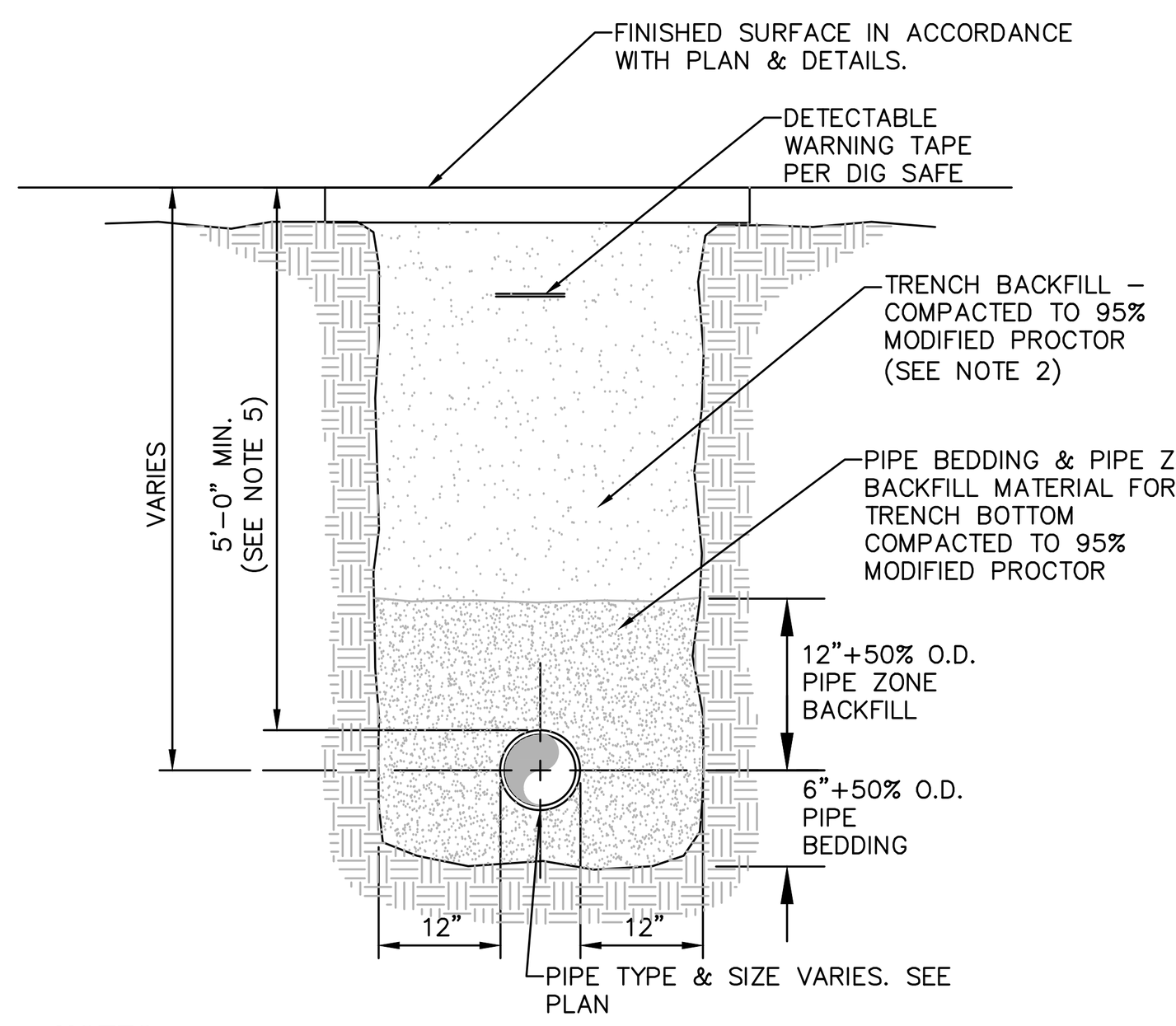

NOTES:

1. PIPE BEDDING & PIPE ZONE BACKFILL SHALL BE A NATURAL RUN-OF-BANK (R.O.B.) SAND OR A MIXTURE OF CRUSHED STONE AND GRAVEL, FREE OF SOFT, NONDURABLE PARTICLES, ORGANIC MATERIALS AND ELONGATED PARTICLES, AND SHALL BE WELL GRADED FROM FINE TO COARSE PARTICLES. BEDDING GRADATIONS SHALL BE APPROVED BY THE ENGINEER AND SHALL MEET THE FOLLOWING GRADATION REQUIREMENTS:

SIEVE DESIGNATION	% PASSING
3/4"	100%
NO. 40	0–70%
NO. 200	0–10%

2. TRENCH BACKFILL SHALL BE A NATURAL RUN-OF-BANK (R.O.B.) OR PROCESSED GRAVEL, OR EXCAVATED MATERIAL FREE OF SOFT, NONDURABLE PARTICLES, ORGANIC MATERIALS AND ELONGATED PARTICLES, AND SHALL BE WELL GRADED FROM FINE TO COARSE PARTICLES. TRENCH BACKFILL GRADATIONS SHALL BE APPROVED BY THE ENGINEER AND SHALL MEET THE FOLLOWING GRADATION REQUIREMENTS:

SIEVE DESIGNATION	% PASSING
4"	100%
NO. 40	0–70%
NO. 200	0–10%

IN NON-TRAFFIC UNPAVED AREAS TRENCH BACKFILL CAN BE MATERIALS EXCAVATED FROM THE TRENCH AS APPROVED BY THE ENGINEER AND COMPACTED TO 90% MODIFIED PROCTOR.

3. INSTALL CONTINUOUS DETECTABLE MARKING TAPE DURING BACKFILLING OF TRENCH FOR UNDERGROUND PIPING. LOCATE TAPE 12" BELOW FINISHED GRADE, DIRECTLY OVER PIPING, EXCEPT 6" BELOW SUBGRADE UNDER PAVEMENTS & SLAB.
4. TRENCHING SHALL BE IMPLEMENTED IN ACCORDANCE WITH O.S.H.A. STANDARDS.
5. 5'-0" MIN COVER SHALL BE APPLIED TO WATER MAIN OR SANITARY SEWER FORCE MAINS ONLY.

1 PIPE TRENCH DETAIL (TYPICAL)

SCALE: NOT TO SCALE

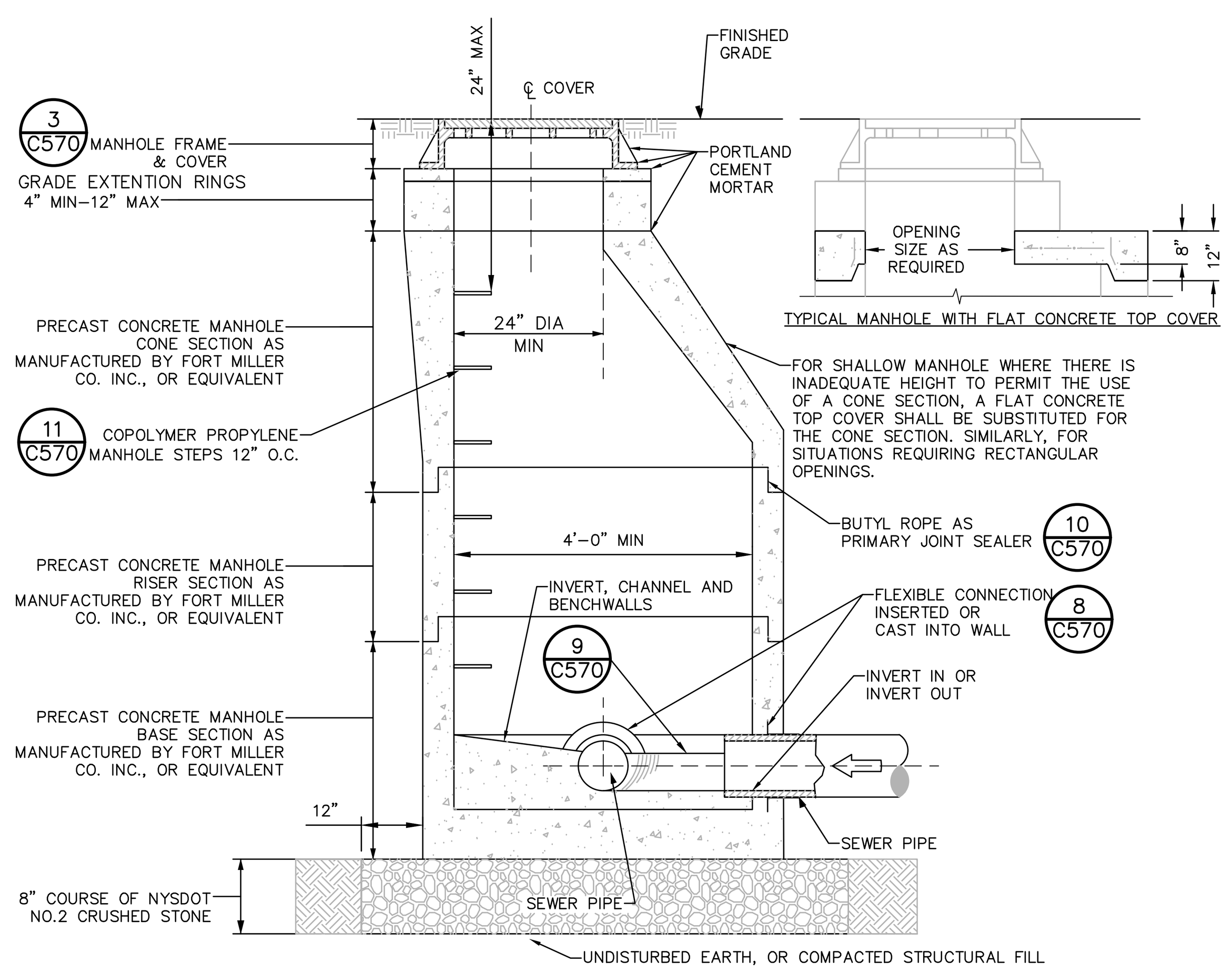

NOTES:

USE ONLY WET-CAST UNITS. DRY-CAST NOT ACCEPTABLE

1.

CONE DIMENSIONS	
DIAM. OPENING	HEIGHT
24"	24" OR 42"
30"	34"

2. INVERT SHALL BE FILLETED.
3. REINFORCEMENT FOR MANHOLE COMPONENTS SHALL BE DESIGNED BY A LICENSED NEW YORK STATE PROFESSIONAL ENGINEER PRIOR TO CONSTRUCTION. SHOP DRAWINGS SHALL BE SUBMITTED FOR REVIEW. STRUCTURE SHALL BE DESIGNED FOR HS20-44 VEHICULAR LOADING PLUS 25% IMPACT.
4. CONCRETE TO TEST **4,500 PSI** AT 28 DAYS IN CONFORMANCE WITH **A.S.T.M. C-478.**
5. BENCH SHALL BE BUILT FOR FLOW BETWEEN INLET AND OUTLET.
6. EACH MANHOLE EXTERIOR SHALL RECEIVE TWO BITUMINOUS COATS.

2 PRECAST CONCRETE MANHOLE

SCALE: NOT TO SCALE

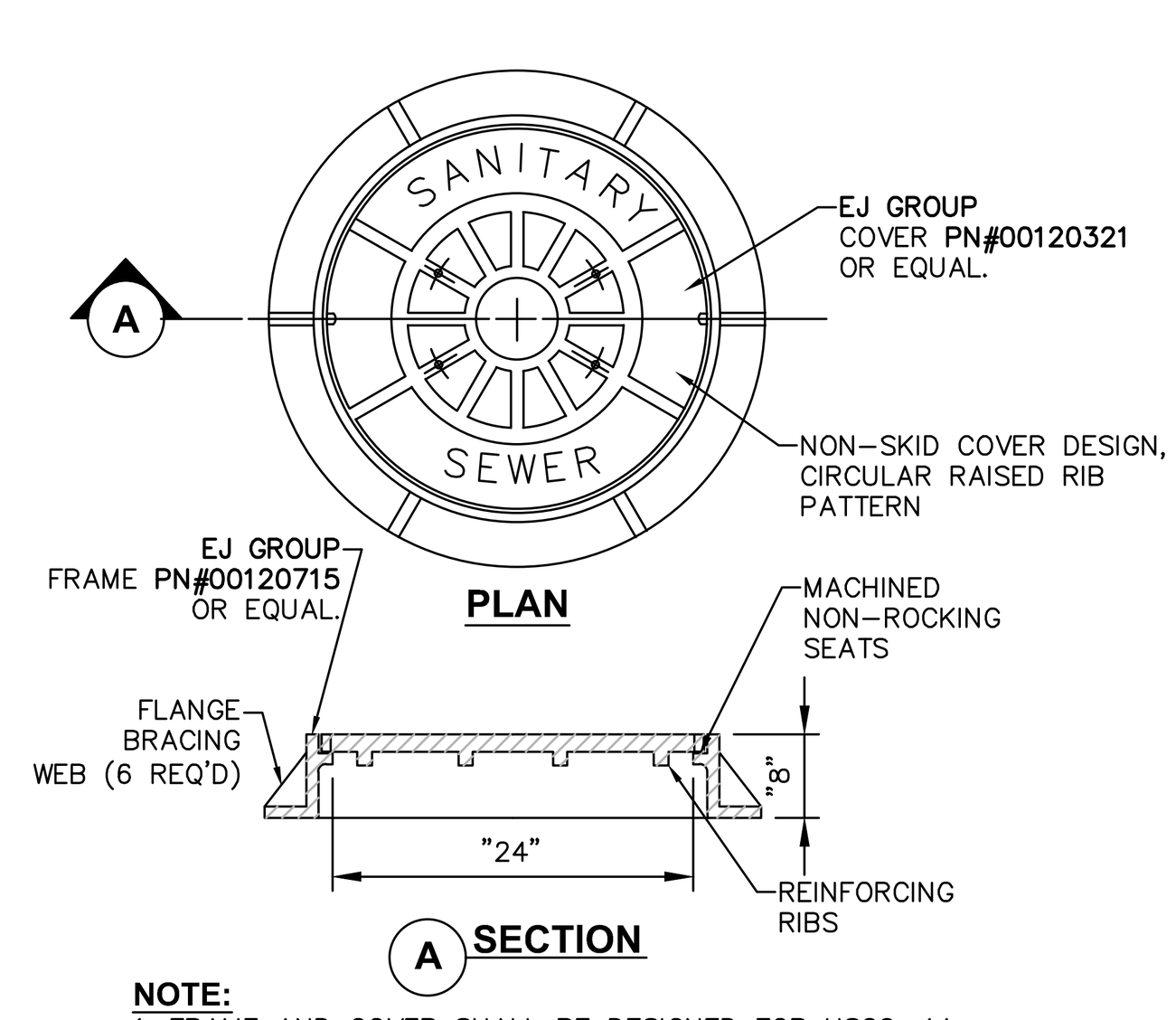

NOTE:
1. FRAME AND COVER SHALL BE DESIGNED FOR HS20-44 VEHICLE LOADING AND 25% IMPACT.

3 HEAVY DUTY STANDARD CAST IRON MH COVER

SCALE: NOT TO SCALE

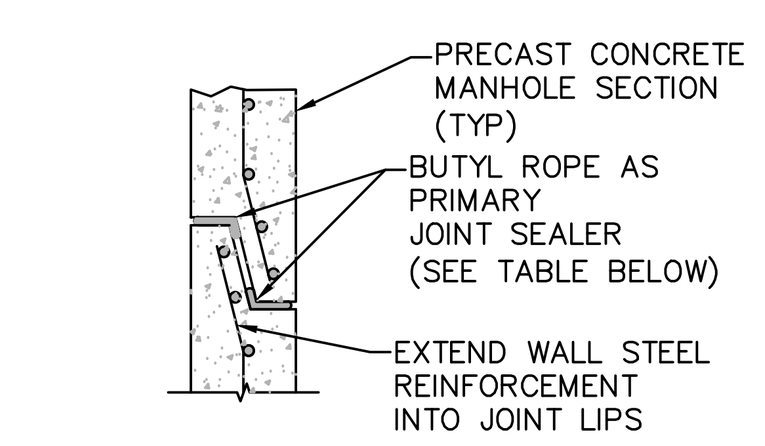

MANHOLE INSIDE DIAMETER	SIZE OF BUTYL ROPE JOINT SEALER
4'-0"	1"
5'-0" & LARGER	1 1/2"

4 MANHOLE JOINT

SCALE: NOT TO SCALE

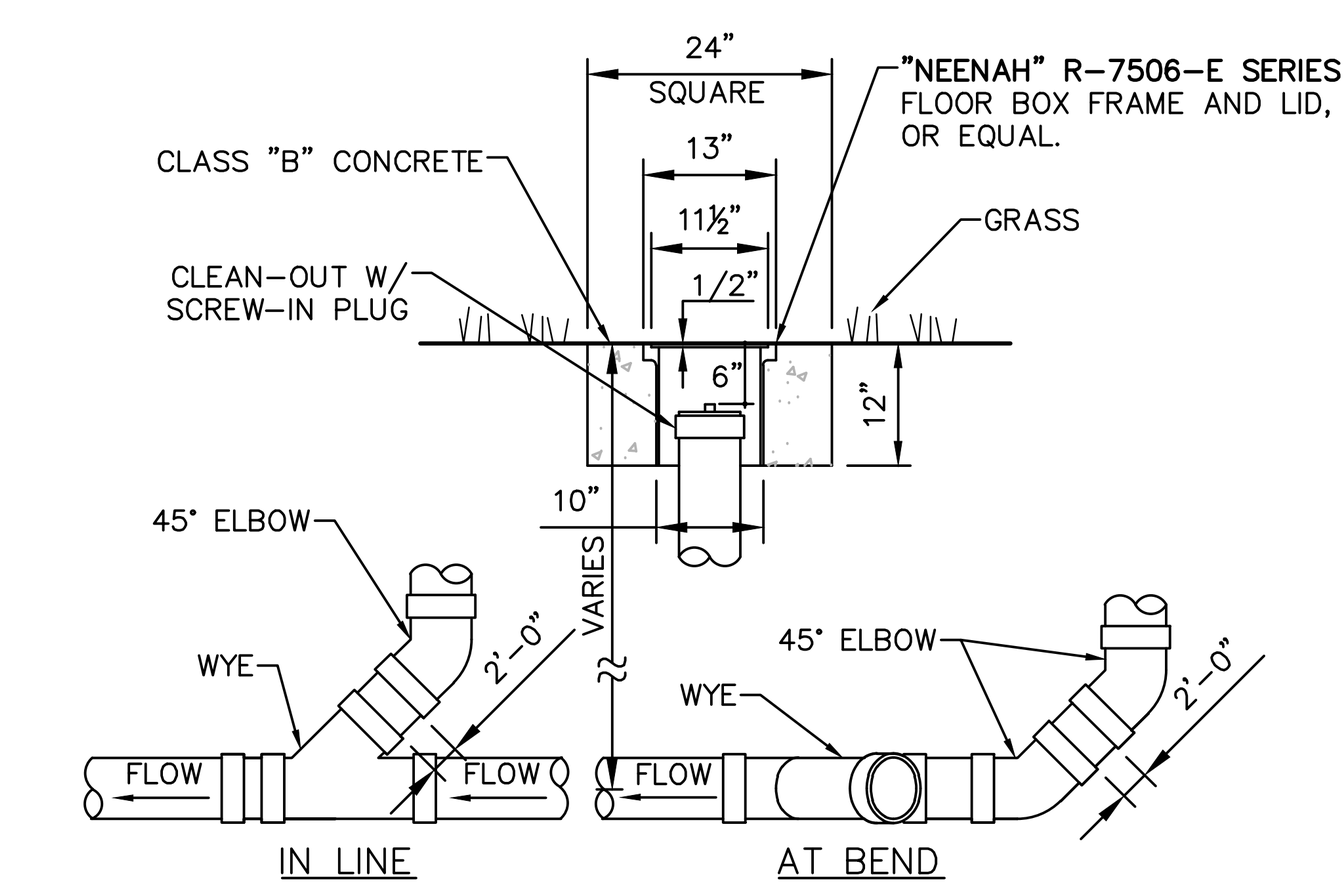

NOTES:
1. SEWER PIPE FITTINGS TO BE **ASTM D-3033 OR D-3034** SDR-35.
2. TO BE USED FOR GRAVITY PORTION OF SANITARY SYSTEM AS WELL AS THE STORM ROOF DRAINAGE SYSTEM.

5 CLEAN OUT - NON TRAFFIC AREAS

SCALE: NOT TO SCALE

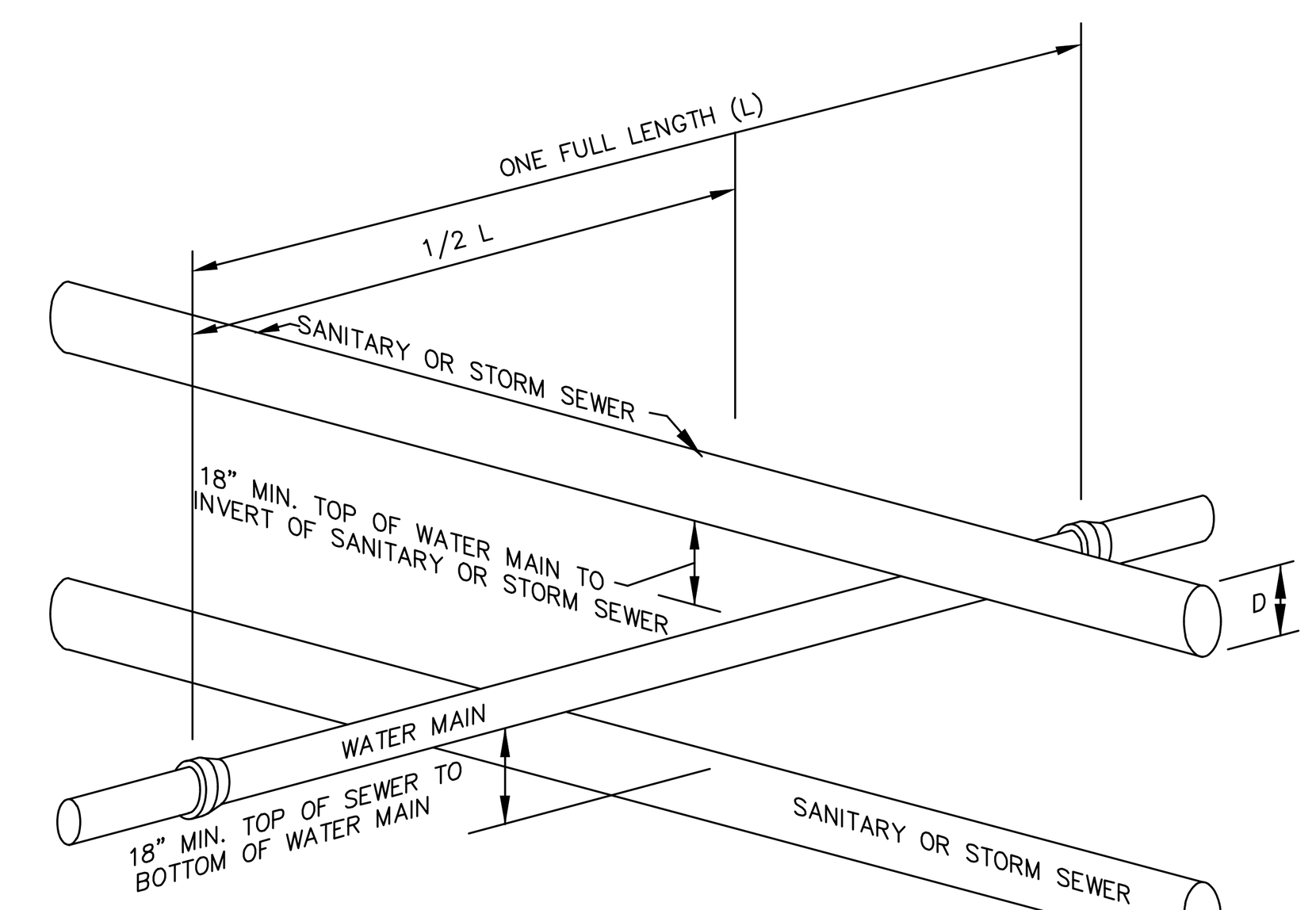

NOTES:

IF 18" VERTICAL SEPARATION CAN NOT BE ACHIEVED AT LOCATIONS OF WATER MAIN & SEWER CROSSINGS, CONTRACTOR SHALL CONSTRUCT EITHER OF THE FOLLOWING OPTIONS:
1. CONSTRUCT SEWER OF PVC WATERWORKS GRADE PRESSURE PIPE MATERIAL 10' ON EACH SIDE OF THE WATER MAIN AND TEST TO 150PSI TO ASSURE TIGHTNESS.
2. EITHER THE WATER MAIN OR THE SEWER LINE MAY BE ENCASED IN A WATER TIGHT CARRIER PIPE WHICH EXTENDS 10 FEET ON BOTH SIDES OF THE CROSSING. THE CARRIER PIPE SHALL BE OF MATERIAL APPROVED FOR THE USE IN WATER MAIN CONSTRUCTION.

6 SECTION WATER/SEWER SEPARATION REQUIREMENTS

SCALE: NOT TO SCALE

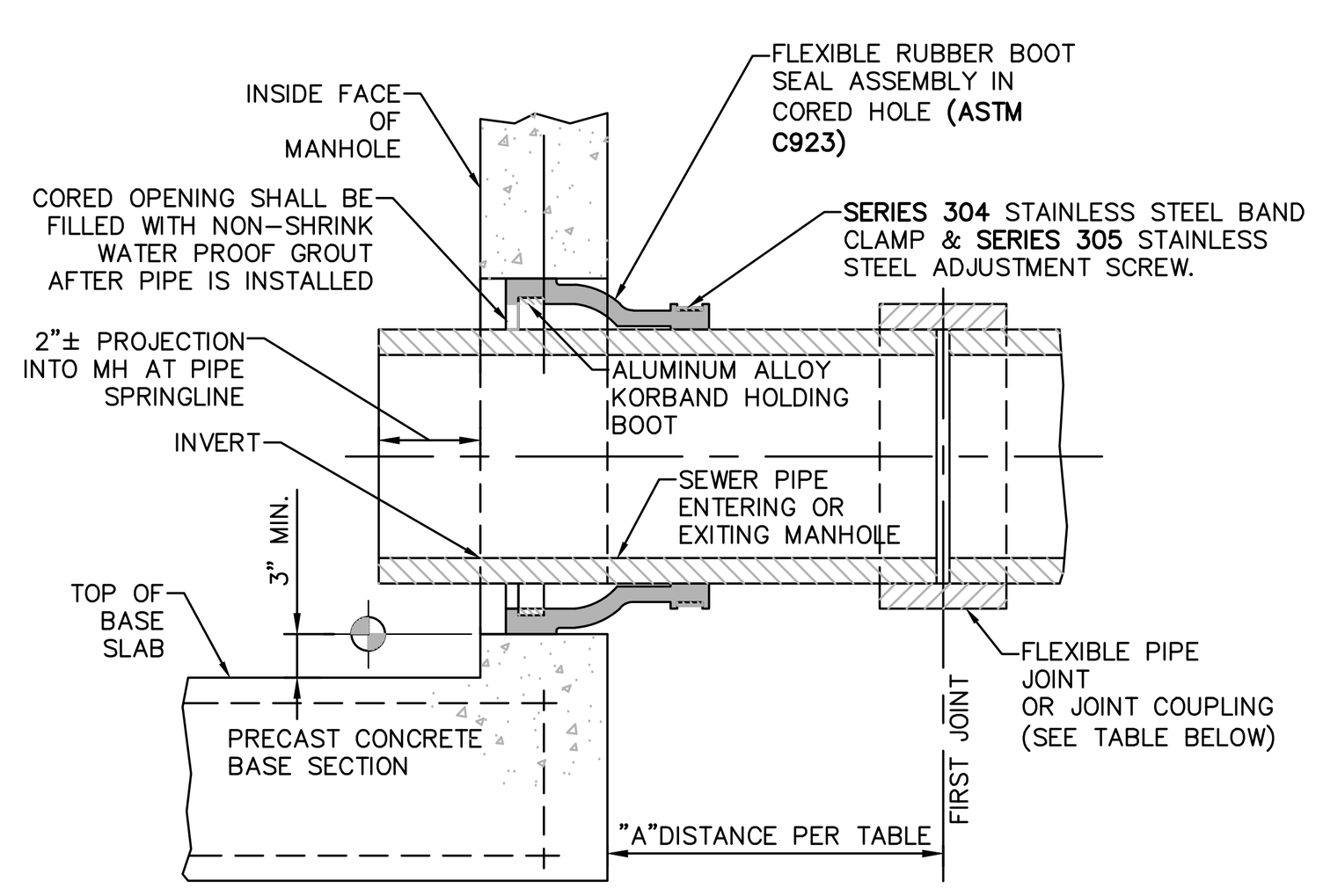

FLEXIBLE JOINT REQUIREMENTS

SEWER PIPE TYPE	FLEXIBLE JOINT TYPE IN & OUT	"A"DISTANCE (FEET)
DUCTILE IRON	STD RUBBER GASKET PIPE JOINT ONLY	10' MAX
PVC	STD RUBBER GASKET PIPE JOINT ONLY	3' MAX

NOTE:
REFERENCE MANHOLE DETAIL(S) FOR REQUIRED INVERT CHANNEL CONFIGURATION.

7 PIPE CONNECTION TO MANHOLE- PRECAST OR CORED HOLE W/ INSERTED FLEXIBLE BOOT

SCALE: NOT TO SCALE

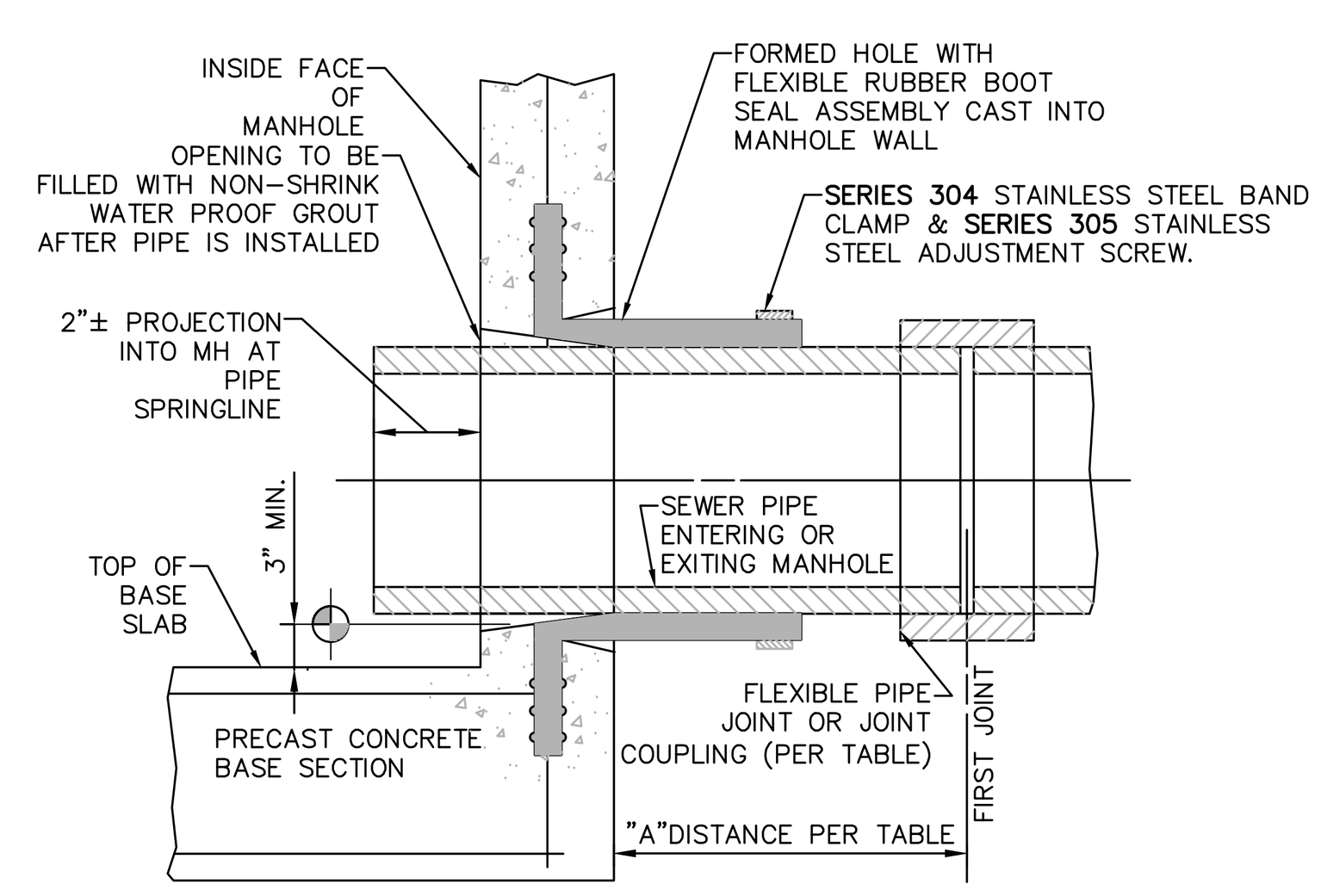

FLEXIBLE JOINT REQUIREMENTS

SEWER PIPE TYPE	FLEXIBLE JOINT TYPE IN & OUT	"A"DISTANCE (FEET)
DUCTILE IRON	STD RUBBER GASKET PIPE JOINT ONLY	10' MAX
PVC	STD RUBBER GASKET PIPE JOINT ONLY	3' MAX

NOTE:
REFERENCE MANHOLE DETAIL(S) FOR REQUIRED INVERT CHANNEL CONFIGURATION.

8 PIPE CONNECTION TO MANHOLE- FLEXIBLE RUBBER BOOT CAST INTO MANHOLE WALL

SCALE: NOT TO SCALE

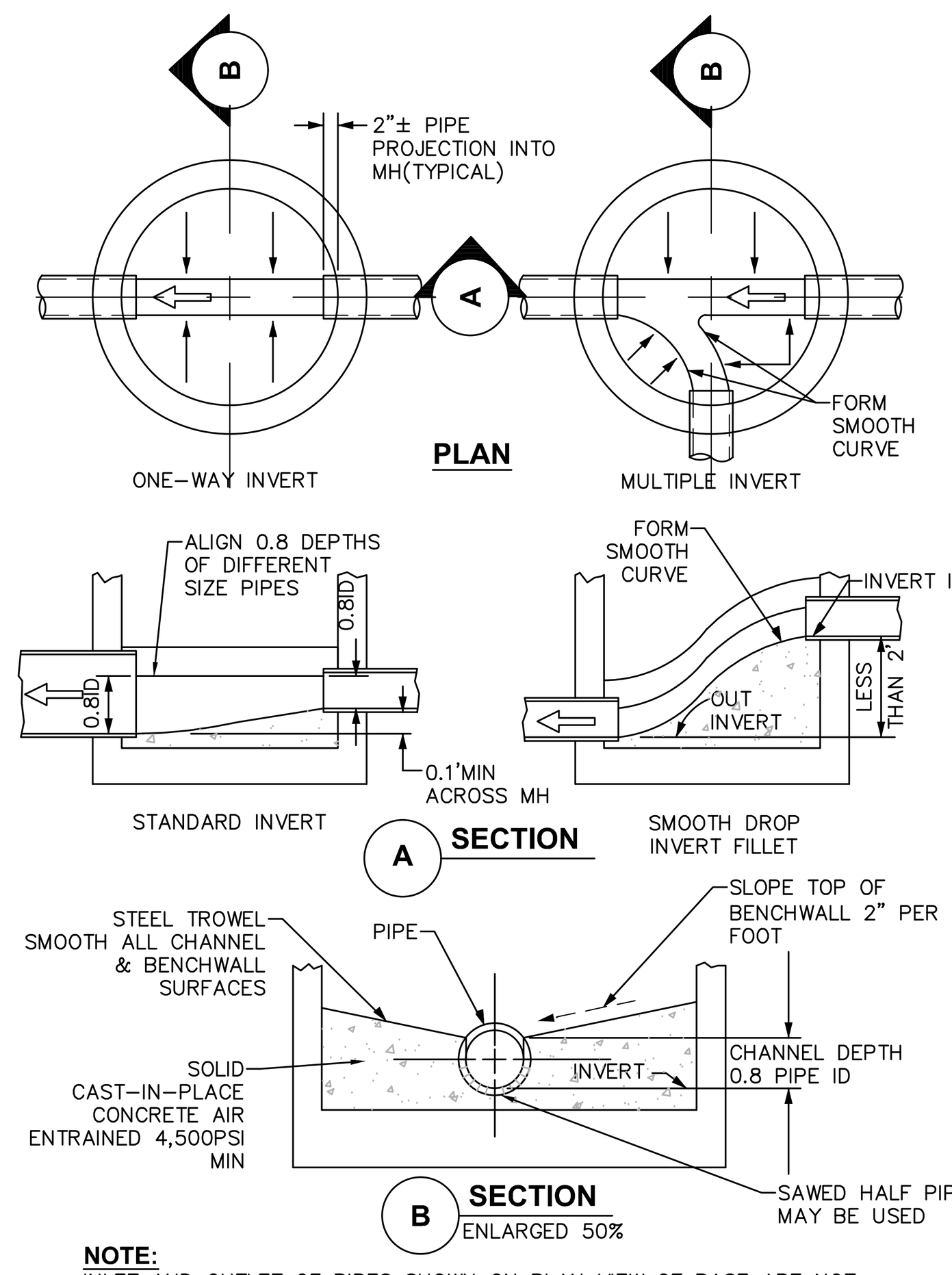

NOTE:
INLET AND OUTLET OF PIPES SHOWN ON PLAN VIEW OF BASE ARE NOT NECESSARILY TYPICAL OF ALL MANHOLES. REFER TO UTILITY PLAN FOR INLET AND OUTLET DIRECTIONS.

9 INVERT, CHANNEL AND BENCHWALLS

SCALE: NOT TO SCALE

ACCEPTABLE MANHOLE STEPS

MANUFACTURER	PATTERN NUMBER	"A" STEP WIDTH	"B" LEG LENGTH	"C" RUNG CLEAR	"D" EMBED-MENT	"E" RUNG CLEAR
M.A. INDUSTRIES INC*	PS2-PF	14 3/4	9 1/4	13 3/4	3 3/8	5 7/8
M.A. INDUSTRIES INC*	PS2-PFS	14 3/4	8 1/4	13 3/4	3 3/8	4 7/8

* OR EQUIVALENT

MH STEP DESIGN AND INSTALLATION SHALL COMPLY WITH ALL OSHA REGULATIONS

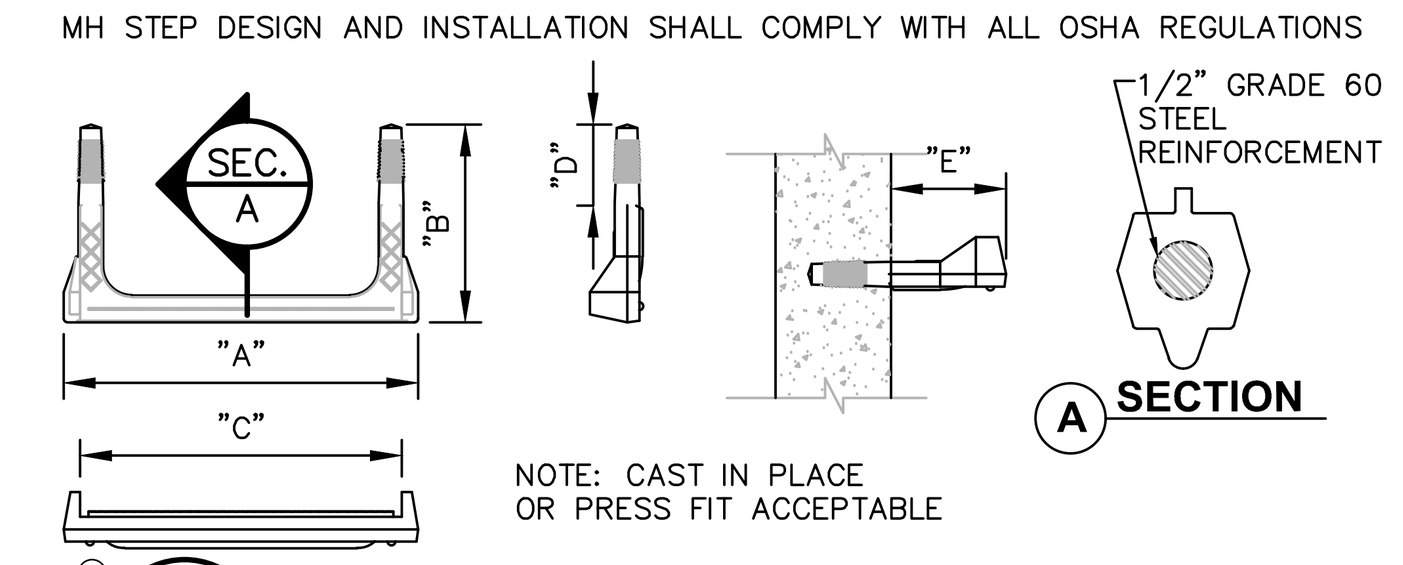

NOTE: CAST IN PLACE OR PRESS FIT ACCEPTABLE

10 COPOLYMER POLYPROPYLENE MH STEP

SCALE: NOT TO SCALE

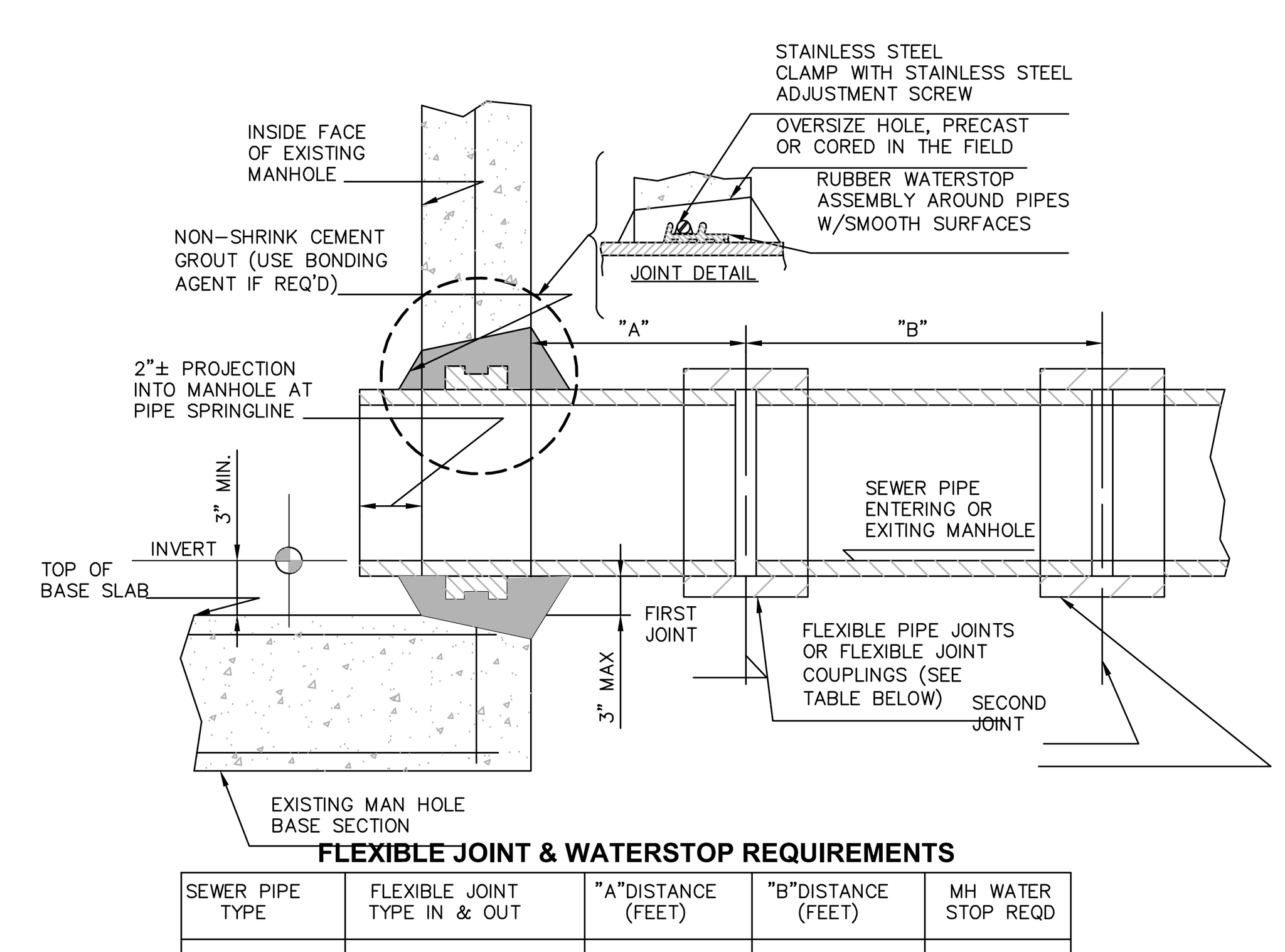

FLEXIBLE JOINT & WATERSTOP REQUIREMENTS

SEWER PIPE TYPE	FLEXIBLE JOINT TYPE IN & OUT	"A"DISTANCE (FEET)	"B"DISTANCE (FEET)	MH WATER STOP REQD
DUCTILE IRON	STD RUBBER GASKET PIPE JOINT ONLY	10'MAX	NO LIMIT	YES
PVC	SPECIAL FLEXIBLE JOINT COUPLING	1'MAX	3'MAX	YES

NOTES:
1. THIS DETAIL SHALL BE USED AT NO EXTRA COST IN PLACE OF EITHER OF THE PIPE-TO-MANHOLE CONNECTION DETAILS ONLY WHEN CONNECTING TO EXISTING MANHOLES THAT HAVE NO FLEXIBLE RUBBER BOOT PROVIDED.
2. REFERENCE MANHOLE DETAIL(S) FOR REQUIRED INVERT CHANNEL CONFIGURATION.

11 PIPE CONNECTION TO EXISTING MANHOLE- CEMENT GROUT SEAL WITH WATER STOP

SCALE: NOT TO SCALE

LaBella
Powered by partnership.
21 Fox Street
Poughkeepsie, NY 12601
845-454-3980
labellapc.com

NOT FOR CONSTRUCTION

EXP: ##/##/20## EXP: ##/##/20##

CERTIFICATE OF AUTHORIZATION NUMBER:
PROFESSIONAL ENGINEERING: 0021272
LAND SURVEYING: 0021271
GEOLOGICAL: 0021659

It is a violation of New York Education Law Art. 145 Sec. 7209 & Art. 147 Sec. 7307, for any person, unless acting under the direction of a licensed architect, professional engineer, or land surveyor, to alter an item in any way. If an item bearing the seal of an architect, engineer, or land surveyor is altered; the altering architect, engineer, or land surveyor shall affix to the item their seal and notation "altered by" followed by their signature and date of such alteration, and a specific description of the alteration.

© 2025 LaBella Associates

MASELO REALTY LLC
18 EASTVIEW ROAD
MONSEY, NY 10952

HIGHVIEW AT THE FALLKILL CREEK
CITY OF POUGHKEEPSIE
DUTCHESS COUNTY, NEW YORK

NO:	DATE:	DESCRIPTION:
Revisions		

PROJECT NUMBER: CZ81947.00
DRAWN BY: JRR
REVIEWED BY: KGA
ISSUED FOR: PLANNING BOARD REVIEW
DATE: 10/28/2025
DRAWING NAME:

SANITARY SEWER DETAILS

DRAWING NUMBER:

C570

Drawing Name: B:\GLOBAL\Legacy\Chazen\Projects\81900-81999\81947.00 - Highview II\DWG\01_C570_81747-00_SEWERD.DWG
Xref's Attached: X-BORDER_81947-00_30x42
Date Printed: Oct 27, 2025, 4:26pm

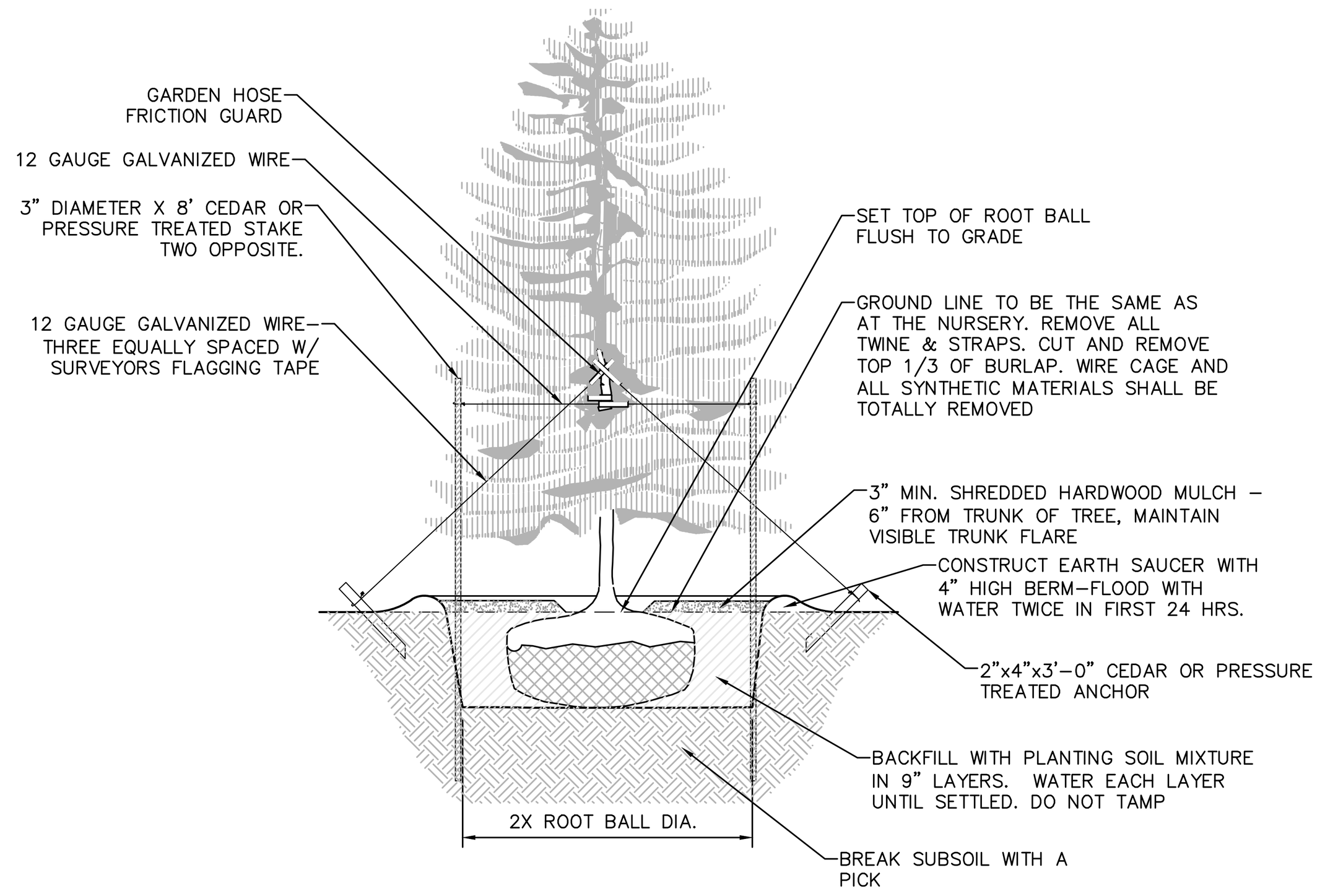

NOTES:
1. SPRAY WITH ANTIDESICCANT IN ACCORDANCE WITH MFG.'S RECOMMENDATIONS.
2. TREES LESS THAN 3" CALIPER SHALL BE STAKED.
3. TREES GREATER THAN 3" CALIPER AND UP SHALL BE GUYED AND ANCHORED.
4. STAKES SHALL BE REMOVED AT THE END OF THE FIRST GROWING SEASON AFTER PLANTING.

© 1 **EVERGREEN PLANTING DETAIL**
SCALE: NOT TO SCALE

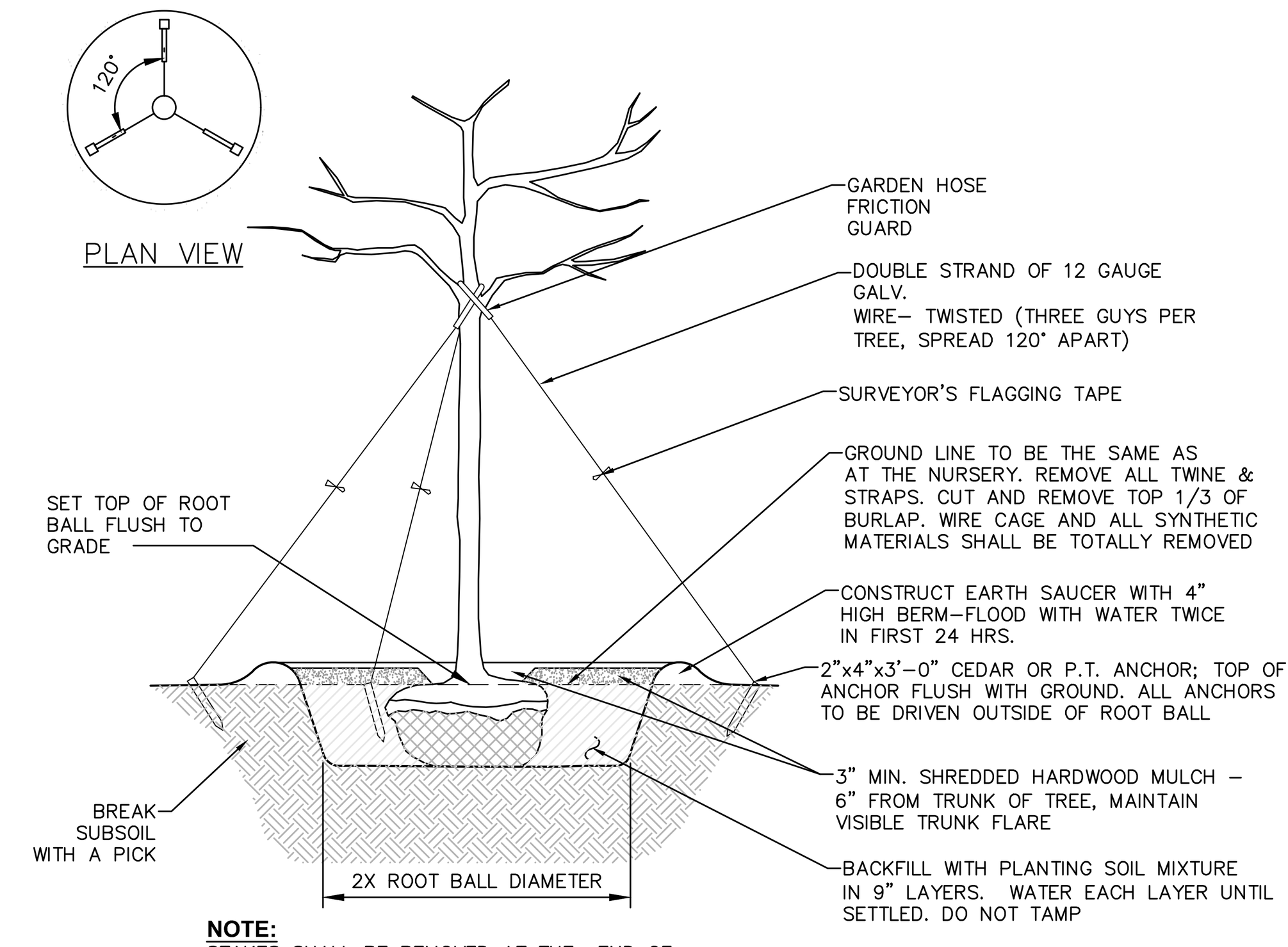

NOTE:
STAKES SHALL BE REMOVED AT THE END OF THE FIRST GROWING SEASON AFTER PLANTING

© 2 **PLANTING AND GUYING DETAIL BALLED AND BURLAPPED TREE**
SCALE: NOT TO SCALE

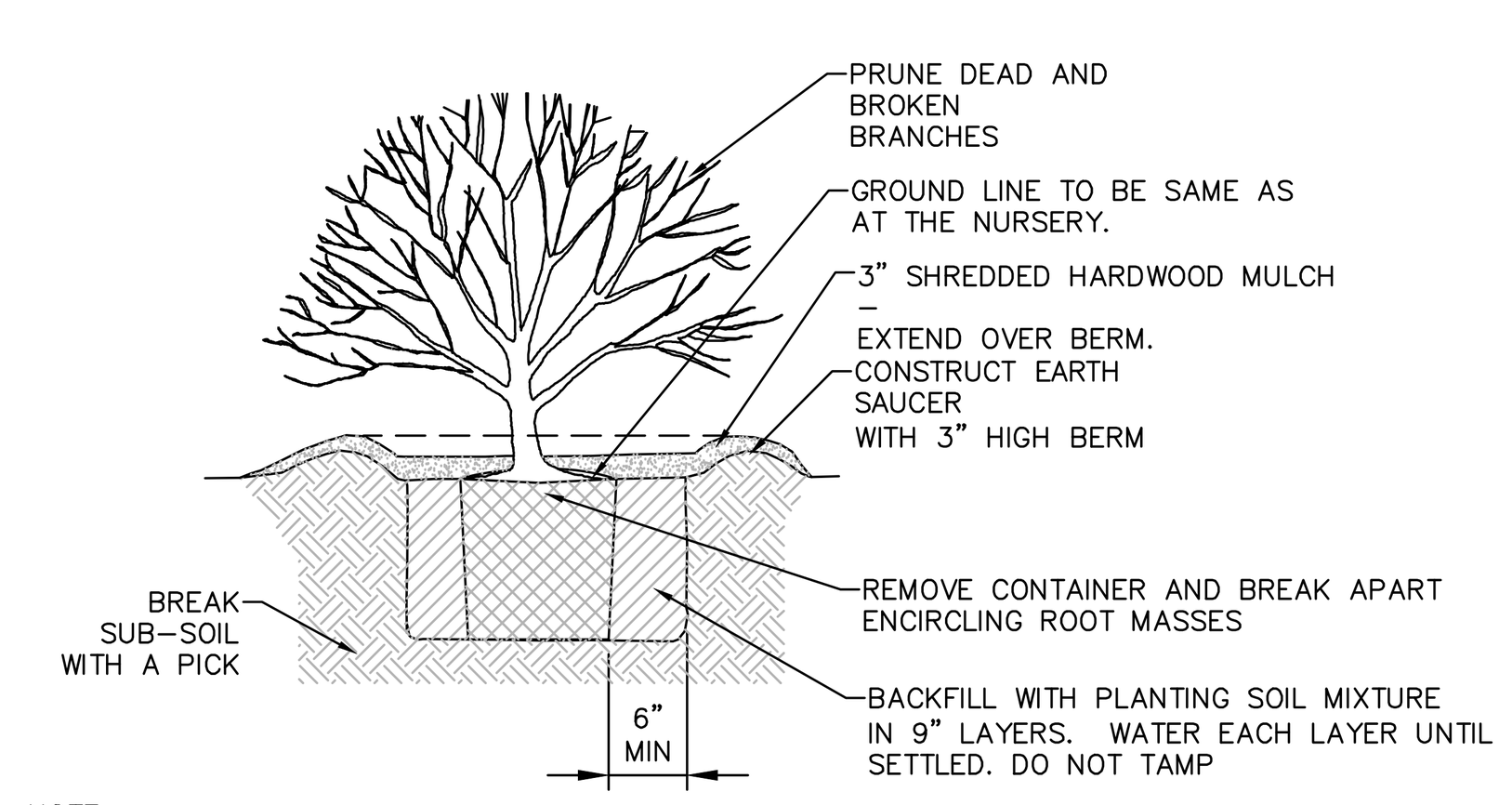

NOTE:
SPRAY WITH ANTI DESICCANT IN ACCORDANCE WITH MFG.'S RECOMMENDATIONS IF FOLIAGE IS PRESENT.

© 3 **SHRUB PLANTING DETAIL FOR CONTAINERIZED SHRUBS**
SCALE: NOT TO SCALE

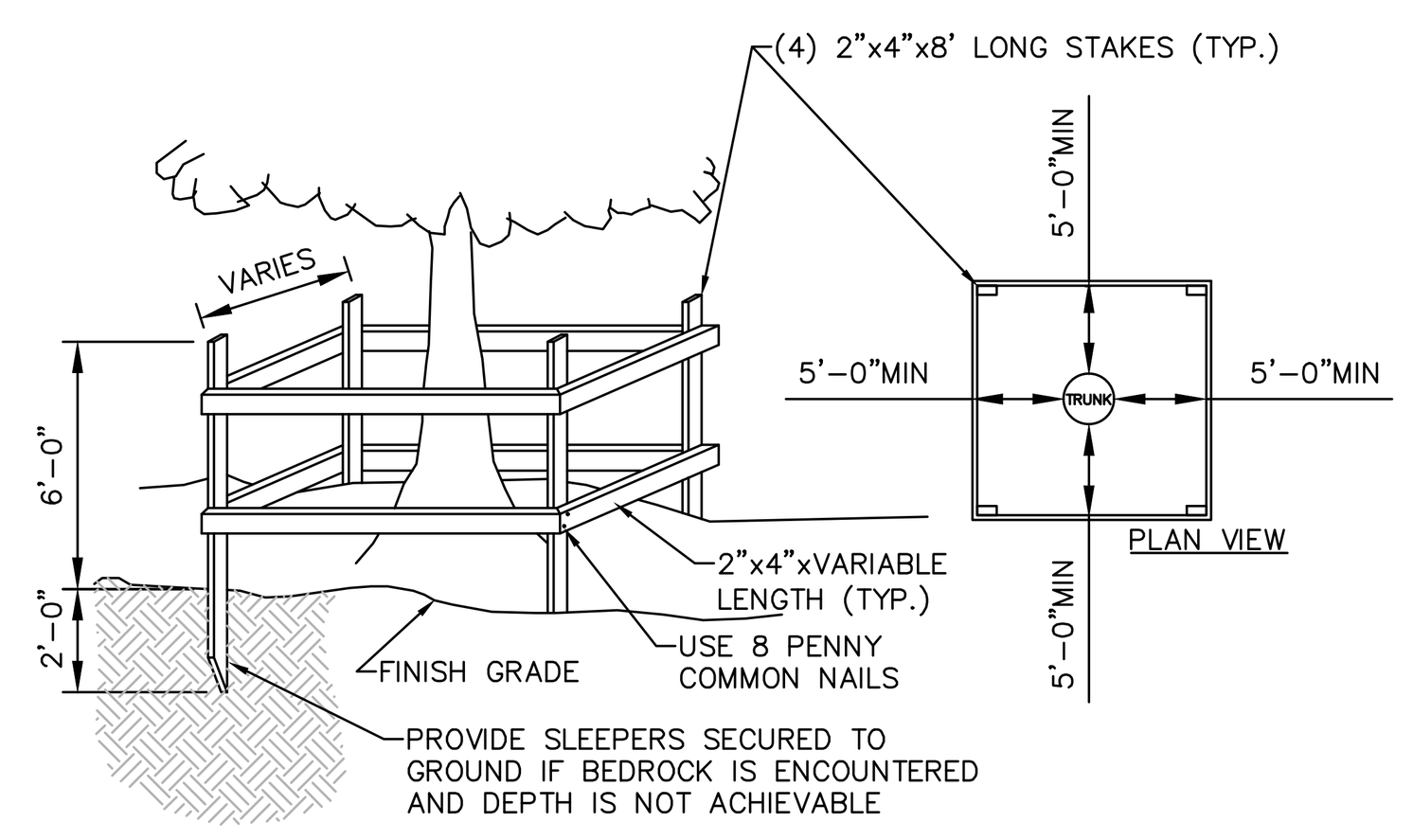

NOTE:
SEE LANDSCAPING PLAN FOR ADDITIONAL TREE PROTECTION NOTES.

© 4 **TEMPORARY TREE PROTECTION DETAIL**
SCALE: NOT TO SCALE

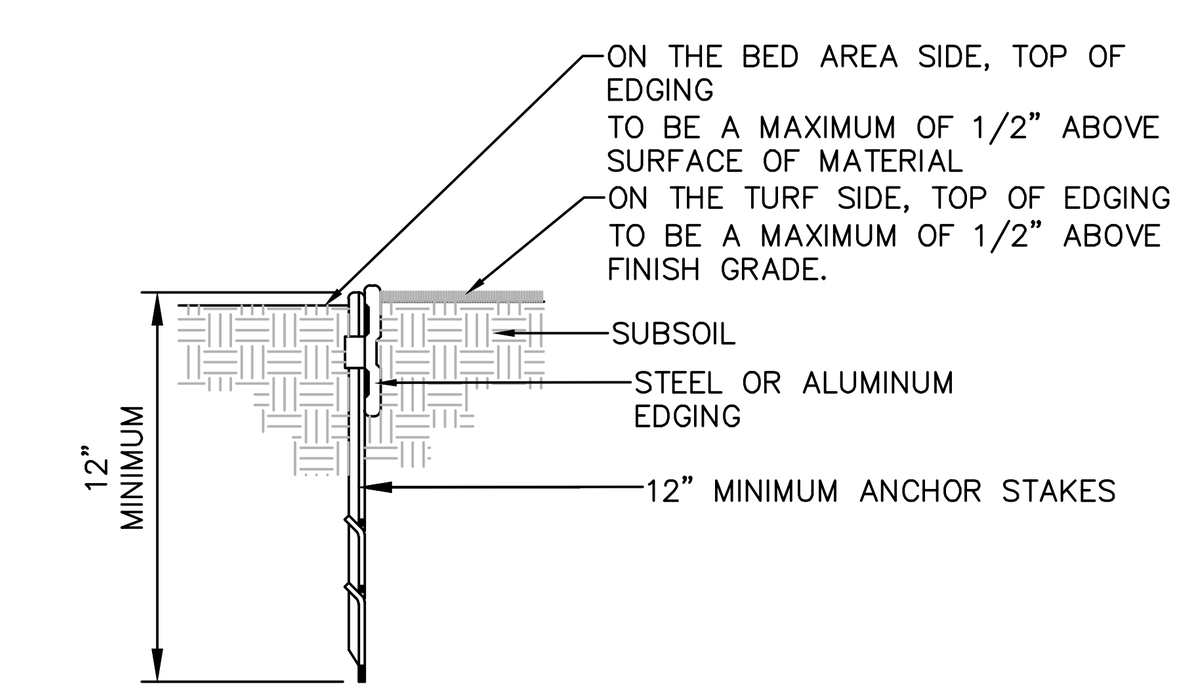

NOTES:
1. 16'–0" SECTIONS TO INCLUDE FIVE (5) 12" STAKES
2. 8'–0" SECTIONS TO INCLUDE THREE (3) 12" STAKES
3. COMPACT GRADES ADJACENT TO EDGING TO MINIMIZE SETTLING
4. CORNERS – CUT BASE OF EDGING HALF WAY AND FORM A CONTINUOUS CORNER.

© 5 **LANDSCAPE BED EDGING**
SCALE: NOT TO SCALE

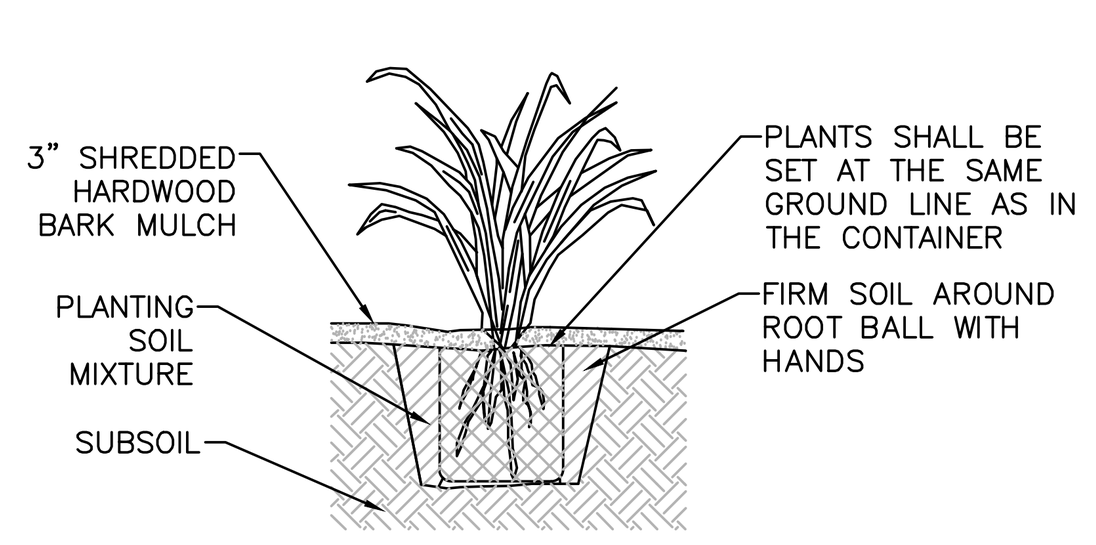

SECTIONAL ELEVATION

NOTES:
1. SPADED PLANTING SOIL MIX (4"–6" DEPTH), ADD FERTILIZER WHEN MIXING. DO NOT COMPACT AFTER PLANTING.
2. WATER THOROUGHLY AFTER PLANTING.
3. PROVIDE WELL DRAINING SUBSOIL WHEN SOIL IS HEAVY OR COMPACTED.
4. PLANTS SHALL BE REMOVED FROM ALL CONTAINERS WHEN PLANTED, UNLESS OTHERWISE STATED IN THE PLANT SCHEDULE.

© 6 **CONTAINERIZED PERENNIAL PLANTING**
SCALE: NOT TO SCALE

LANDSCAPING NOTES:

1. THE LANDSCAPE CONTRACTOR SHALL CAREFULLY COORDINATE CONSTRUCTION ACTIVITIES WITH THAT OF THE EARTHWORK CONTRACTOR AND OTHER SITE DEVELOPMENT.
2. THE CONTRACTOR SHALL VERIFY DRAWING DIMENSIONS WITH ACTUAL FIELD CONDITIONS AND INSPECT RELATED WORK AND ADJACENT SURFACES. THE CONTRACTOR SHALL VERIFY THE ACCURACY OF ALL FINISH GRADES WITHIN THE WORK AREA. THE CONTRACTOR SHALL REPORT TO THE LANDSCAPE ARCHITECT/ENGINEER AND OWNER ALL CONDITIONS WHICH PREVENT PROPER EXECUTION OF THIS WORK.
3. THE EXACT LOCATION OF ALL EXISTING UTILITIES, STRUCTURES AND UNDERGROUND UTILITIES, WHICH MAY NOT BE INDICATED ON THE DRAWINGS, SHALL BE DETERMINED BY THE CONTRACTOR. THE CONTRACTOR SHALL PROTECT EXISTING STRUCTURES AND UTILITY SERVICES AND IS RESPONSIBLE FOR THEIR REPLACEMENT IF DAMAGED.
4. THE CONTRACTOR SHALL KEEP THE PREMISES FREE FROM RUBBISH AND ALL DEBRIS AT ALL TIMES AND SHALL ARRANGE MATERIAL STORAGE SO AS NOT TO INTERFERE WITH THE OPERATION OF THE PROJECT. ALL UNUSED MATERIALS, RUBBISH AND DEBRIS SHALL BE REMOVED FROM THE SITE.
5. NO TREES OR SHRUBS SHALL BE PLANTED ON EXISTING OR PROPOSED UTILITY LINES.
6. QUALITY ASSURANCE:
   A. NOMENCLATURE: PLANT NAMES SHALL CONFORM TO THE LATEST EDITION OF "STANDARDIZED PLANT NAMES" AS ADOPTED BY THE AMERICAN JOINT COMMITTEE ON HORTICULTURAL NOMENCLATURE.
   B. SIZE AND GRADING: PLANT SIZES AND GRADING SHALL CONFORM TO THE LATEST EDITION OF "AMERICAN STANDARD FOR NURSERY STOCK" AS SPONSORED BY THE AMERICAN ASSOCIATION OF NURSERYMEN, INC (AAN), UNLESS OTHERWISE SPECIFIED.
   C. NURSERY SOURCE: OBTAIN FRESHLY DUG, HEALTHY, VIGOROUS PLANTS NURSERY GROWN UNDER CLIMACTIC CONDITIONS SIMILAR TO THOSE IN THE LOCALITY OF THE PROJECT FOR A MINIMUM OF 2 YEARS. PLANTS SHALL HAVE BEEN LINED OUT IN ROWS, ANNUALLY CULTIVATED, SPRAYED, PRUNED AND FERTILIZED IN ACCORDANCE WITH GOOD HORTICULTURAL PRACTICE. ALL PLANTS SHALL HAVE BEEN TRANSPLANTED OR ROOT PRUNED AT LEAST ONCE IN THE PAST 3 YEARS. BALLED AND BURLAPPED PLANTS MUST COME FROM SOIL WHICH WILL HOLD A FIRM ROOT BALL. HEELED IN PLANTS AND PLANTS FROM COLD STORAGE ARE NOT ACCEPTABLE.
   D. SUBSTITUTIONS: DO NOT MAKE SUBSTITUTIONS OF TREES AND/OR SHRUB MATERIALS. IF REQUIRED LANDSCAPE MATERIAL IS NOT OBTAINABLE, SUBMIT PROOF OF NON–AVAILABILITY AND PROPOSAL FOR USE OF EQUIVALENT MATERIAL. WHEN AUTHORIZED, ADJUSTMENTS OF CONTRACT AMOUNT (IF ANY) WILL BE MADE BY CHANGE ORDER.
7. SEEDING & PLANTING SEASONS AND TIMING CONDITIONS:
   A. UNLESS OTHERWISE DIRECTED IN WRITING, SEED LAWNS FROM MARCH 15 TO JUNE 15, AND FROM AUGUST 15 TO OCTOBER 15.
   B. UNLESS OTHERWISE DIRECTED IN WRITING PLANT TREES AND SHRUBS FROM MARCH 15 TO JUNE 1, AND FROM AUGUST 15 TO OCTOBER 30.
   C. AREAS UNDERGOING CLEARING OR GRADING AND ANY AREAS DISTURBED BY CONSTRUCTION ACTIVITIES WHERE LAWNS OR PLANTINGS ARE TO BE ESTABLISHED AND WORK IS COMPLETE, SHALL BE RESTORED WITH PERMANENT VEGETATIVE COVER AS SOON AS SITE AREAS ARE AVAILABLE AND WITHIN 14 DAYS AFTER WORK IS COMPLETE; WORK SHALL BE WITHIN THE SEASONAL LIMITATIONS FOR EACH KIND OF LANDSCAPE WORK REQUIRED. PROVIDE STABILIZATION WITH TEMPORARY VEGETATIVE COVER (TOPSOIL AND TEMPORARY COVER SEED MIX) WITHIN 14 DAYS AFTER WORK IS COMPLETE, FOR SEEDING OUTSIDE PERMITTED SEEDING PERIODS.
8. PRODUCTS:
   A. IMPORTED TOPSOIL: PROVIDE TOPSOIL CONFORMING TO THE FOLLOWING:
      i. LOAM TOPSOIL, WELL DRAINED HOMOGENEOUS TEXTURE AND OF UNIFORM GRADE, WITHOUT THE ADMIXTURE OF SUBSOIL MATERIAL AND FREE OF DENSE MATERIAL, HARDPAN, CLAY, STONES, SOD OR OTHER OBJECTIONABLE MATERIAL.
      ii. CONTAINING NOT LESS THAN 5% NOR MORE THAN 20% ORGANIC MATTER IN THAT PORTION OF A SAMPLING PASSING A 1/4" SIEVE WHEN DETERMINED BY THE WET COMBUSTION METHOD ON A SAMPLE DRIED AT 105°C.
      iii. CONTAINING A PH VALUE WITHIN THE RANGE OF 6.5 TO 7.5 ON THAT PORTION OF THE SAMPLE WHICH PASSES A 1/4" SIEVE.
      iv. CONTAINING THE FOLLOWING WASHED GRADATIONS:

SIEVE DESIGNATION	% PASSING
1"	100
1/4"	97–100
NO 200	20–60

   B. SEED MIXTURE:
   PROVIDE FRESH, CLEAN, NEW–CROP SEED MIXED IN THE PROPORTIONS SPECIFIED FOR SPECIES AND VARIETY, AND CONFORMING TO FEDERAL AND STATE STANDARDS. PROVIDE THE FOLLOWING MIXTURES:
      i. LAWN SEED MIX

SUN AND PARTIAL SHADE:

AMOUNT BY: WEIGHT	SPECIES OR VARIETY	MINIMUM % PURITY	GERMINATION
50%	KENTUCKY BLUE GRASS*	95%	80%
20%	PERENNIAL RYE	98%	90%
30%	CREEPING RED FESCUE	97%	85%
100%			

*MINIMUM 2 (EQUAL PROPORTIONS) VARIETIES AS LISTED IN CORNELL RECOMMENDATIONS FOR TURFGRASS.

SHADE:

AMOUNT BY: WEIGHT	SPECIES OR VARIETY	MINIMUM % PURITY	GERMINATION
25%	KENTUCKY BLUE GRASS**	95%	80%
20%	PERENNIAL RYE	98%	90%
35%	CREEPING RED FESCUE	97%	85%
20%	CHEWINGS RED FESCUE	97%	85%
100%			

**SHADE TOLERANT VARIETY

      ii TEMPORARY COVER SEED MIX

AMOUNT BY: WEIGHT	SPECIES OR VARIETY	MINIMUM % PURITY	GERMINATION
100%	ANNUAL RYEGRASS	98%	90%

   C. LIME: NATURAL LIMESTONE CONTAINING AT LEAST 85% OF TOTAL CARBONATES, GROUND TO SUCH FINENESS THAT AT LEAST 90% PASSES A 10–MESH SIEVE AND AT LEAST 50% PASSES A 100–MESH SIEVE.
   D. FERTILIZER:
      i. FOR STARTER FERTILIZING: COMMERCIAL STARTER FERTILIZER, GRANULAR, NONBURNING PRODUCT CONTAINING 5% NITROGEN, 10% AVAILABLE PHOSPHOROUS, AND 5% WATER SOLUABLE POTASH (5–10–5).
      ii. FOR FINAL FERTILIZING: IF APPLIED IN SPRING SEASON, SHALL BE A SLOW RELEASE COMMERCIAL FERTILIZER, GRANULAR, WITH 3–1–2 NPK. IF APPLIED IN FALL SEASON, SHALL BE AS SPECIFIED IN (8.D.i) ABOVE.
   E. TREES, SHRUBS, GROUND COVERS, PERENNIALS, ANNUALS:
      i. PLANTING SOIL MIXTURE: SHALL BE PREMIXED IN BULK, AND CONTAIN THE FOLLOWING BY VOLUME:
         30 PARTS TOPSOIL
         10 PARTS PEAT
         1 PART BONE MEAL
      ii. PEAT: BROWN TO BLACK IN COLOR, WEED AND SEED FREE. DRIED SPHAGNUM PEAT, CONTAINING NOT MORE THAN 9% MINERAL ON A DRY BASIS AND CONFORMING TO NYSDOT 713–15.
      iii. BONE MEAL: FINELY GROUND, RAW, MINIMUM 4% NITROGEN AND 20% PHOSPHORIC ACID. IT SHALL BE DELIVERED IN SEALED BAGS SHOWING THE MANUFACTURER'S GUARANTEED ANALYSIS.
   F. STAKES: 8 FEET LONG, 3 INCH DIA. CEDAR OR P.T. WOOD STAKES.
   G. HOSE: NEW, 2–PLY GARDEN HOSE NOT LESS THAN 1/2 INCH IN DIAMETER.
   H. WEED CONTROL FABRIC: SOIL CHECK AS MANUFACTURED BY BRIGHTON BYPRODUCTS CO. INC, NEW BRIGHTON, PA; MIRASCAPE OR MIRAFI GEOSYNTHETIC PRODUCTS, NORCROSS, PA, OR APPROVED EQUIVALENT.
   I. MULCH:
      i. LAWN AREAS
      OAT OR WHEAT STRAW, FREE OF WEEDS. AN ALTERNATIVE IS WOOD FIBER CELLULOSE IF HYDROSEEDING IS USED.
      ii. PLANT BED AREAS
      GROUND OR SHREDDED HARDWOOD BARK, UNCOLORED. NO PIECES OVER 2 INCHES GREATEST DIMENSION. FREE FROM SAWDUST.
9. EXECUTION:
   A. LANDSCAPE WORK SHALL BE UNDERTAKEN AS SOON AS SITE AREAS ARE AVAILABLE.
   B. TOPSOIL SHALL BE SPREAD NO LESS THAN 4" OVER SUB–GRADE MATERIAL. SOIL AMENDMENTS SHALL BE THOROUGHLY MIXED INTO THE TOP 4" OF TOPSOIL, FOLLOWING THE SPECIFICATIONS STATED BELOW.
   C. PERFORM FINE GRADING TO FINISHED ELEVATION ONLY IMMEDIATELY PRIOR TO PLANTING. PLANTING AREAS SHALL BE GRADED TO A SMOOTH, EVEN SURFACE, FREE OF DEPRESSIONS OR RIDGES WITH A UNIFORM LOOSE, FINE TEXTURE.
   D. FERTILIZING:
      i. THE SOIL SHALL BE TESTED FOR PH AND LIME ADDED AS NECESSARY. ALL AMENDMENTS SHALL BE CHECKED AND APPROVED BY LANDSCAPE ARCHITECT BEFORE AMENDMENTS ARE MADE.
      ii. APPLY FERTILIZER AT RATE OF 4 LBS/1000 SF FOR LAWN AREAS.
   E. LAWN:
      i. LAWN SEED MIX: SEED AT THE RATE OF 5 TO 6 LBS PER 1,000 SF.
      ii. TEMPORARY COVER SEED MIX: SEED AT THE RATE OF 3 TO 4 LBS PER 1,000 SF.
      iii. TEMPORARY COVER SEED MIX TO BE APPLIED ONLY FOR LATE FALL OR SUMMER SOIL STABILIZATION OUTSIDE ALLOWED SEEDING PERIODS.
   F. ALL SEEDED AREAS SHALL BE PROTECTED FROM EROSION BY ONE OF THE FOLLOWING METHODS:
      i. A UNIFORM BLANKET OF STRAW APPLIED AT A RATE OF 2 TONS/ACRE MIN, TO BE APPLIED ONCE SEEDING IS COMPLETE.
      ii. WOOD FIBER CELLULOSE APPLIED WITH SEED MIX BY A HYDROSEEDER AT A RATE OF 2,000 LBS/ACRE.
   G. ALL SEEDED SLOPES 3:1 OR GREATER SHALL BE PROTECTED FROM EROSION WITH JUTE MESH OR APPROVED EQUAL.
   H. ALL NEWLY PLANTED AREAS SHALL BE KEPT MOIST BY WATERING UNTIL GRASSES AND GROUND COVERS ARE WELL ESTABLISHED. THE LANDSCAPE CONTRACTOR MUST WATER PLANT MATERIAL WHEN NECESSARY FOR 60 DAYS AFTER INSTALLATION.
   I. LAWNS ARE TO BE WARRANTED UNTIL THEY BECOME ESTABLISHED, UNTIL FINAL ACCEPTANCE, AND NOT LESS THAN 60 DAYS AFTER COMPLETION OF ALL WORK. TREES, SHRUBS, GROUND COVERS, AND PERENNIALS SHALL BE WARRANTED AGAINST DEFECTS INCLUDING POOR GROWTH AND DEATH, EXCEPT WHEN RESULTING FROM OWNER NEGLECT, INCIDENTS THAT ARE BEYOND THE CONTROL OF THE LANDSCAPE INSTALLER AND DAMAGE OR ABUSE BY OTHERS, FOR AT LEAST ONE FULL YEAR AFTER PROJECT COMPLETION.

LaBella
Powered by partnership.
21 Fox Street
Poughkeepsie, NY 12601
845-454-3980
labellapc.com

NOT FOR CONSTRUCTION
EXP: ##/##/20## EXP: ##/##/20##

CERTIFICATE OF AUTHORIZATION NUMBER:
PROFESSIONAL ENGINEERING: 0021272
LAND SURVEYING: 0021271
GEOLOGICAL: 0021659

It is a violation of New York Education Law Art. 145 Sec. 7209 & Art. 147 Sec. 7307, for any person, unless acting under the direction of a licensed architect, professional engineer, or land surveyor, to alter an item in any way. If an item bearing the seal of an architect, engineer, or land surveyor is altered; the altering architect, engineer, or land surveyor shall affix to the item their seal and notation "altered by" followed by their signature and date of such alteration, and a specific description of the alteration.

© 2025 LaBella Associates

MASELO REALTY LLC
18 EASTVIEW ROAD
MONSEY, NY 10952

HIGHVIEW AT THE FALLKILL CREEK
CITY OF POUGHKEEPSIE
DUTCHESS COUNTY, NEW YORK

NO:	DATE:	DESCRIPTION:
Revisions		

PROJECT NUMBER: CZ81947.00
DRAWN BY: JRR
REVIEWED BY: KGA
ISSUED FOR: PLANNING BOARD REVIEW
DATE: 10/28/2025
DRAWING NAME:

LANDSCAPING DETAILS

DRAWING NUMBER:

C580

Drawing Name: B:\GLOBAL\Legacy\Chazen\Projects\81900-81999\81947.00 - Highview II\DWG\01_C580_81747-00_LANDSCD.DWG
Xref's Attached: X-BORDER_81947-00_30x42
Date Printed: Oct 27, 2025, 4:26pm

Full Environmental Assessment Form Part 1

Highview at the Fallkill Creek

Milton Street
City of Poughkeepsie
Dutchess County, New York



October 28, 2025

Prepared for:
Maselo Realty, LLC
18 Eastview Road
Monsey, NY, 10952

Prepared by:
LaBella Associates
21 Fox Street Suite 201
Poughkeepsie, NY 12601
845-454-3980

Project No. 81947.00

LaBella
Powered by partnership.

TABLE OF CONTENTS

PROJECT NARRATIVE

1.0 PROJECT DESCRIPTION 1
1.1 Introduction 1
1.2 Background 1
1.3 Site Description and Project Details 2
1.4 Anticipated List of Approvals 2
2.0 LAND USE, ZONING, AND PLANNING 3
2.1 Land Use and Zoning 3
2.2 Public Policy 4
3.0 COMMUNITY SERVICES 6
3.1 Emergency Services 6
4.0 SOILS AND WATER RESOURCES 6
4.1 Soils 6
4.2 Water Resources 8
4.3 Floodplain 9
5.0 UTILITIES 10
5.1 Water and Wastewater 10
5.2 Stormwater 10
6.0 TRAFFIC AND PARKING 11
6.1 Traffic 11
6.2 Parking 12
7.0 VEGETATION AND WILDLIFE 12
7.1 Endangered, Threatened, and Rare Species and Significant Habitat 12
8.0 HISTORIC AND ARCHEOLOGICAL RESOURCES 15

LIST OF TABLES

Table 1: Anticipated Approvals/Permits 2
Table 2: Residential Neighborhood A (RNA) - Permitted Uses 3
Table 3: Characteristics of Soil Types within Project Area 7
Table 4: Anticipated Water Usage/Wastewater Generation 10
Table 5: Estimated Traffic Generation 11
Table 7: Habitat Types on the Project Site 12
Table 8: Habitat Cover Types Identified on the Site 13

FULL ENVIRONMENTAL ASSESSMENT FORM PART 1 FORM

LIST OF FIGURES

Figure 1: USGS Location Map
Figure 2: Orthophoto Tax Map
Figure 3: Land Use Map
Figure 4: Zoning Map, Existing and Proposed
Figure 5: Soil Map
Figure 6: Wetland, Stream, and Floodplain Map
Figure 7: NYSDEC Environmental Resource Map
Figure 8: NYSOPRHP Cultural Resource Information System (CRIS) Map
Figure 9: Map of Publicly Accessible Federal, State, or Local Scenic of Aesthetic Resources

ATTACHMENTS

Attachment A: Councilwoman Flowers Letter of Support
Attachment B: Natural Resource Information

Note: Site Plan submitted separately.

PROJECT NARRATIVE

1.0 PROJECT DESCRIPTION

1.1 Introduction

The Applicant and Owner, Maselo Realty, LLC, is proposing the rezoning of an 8.713-acre tax parcel on Milton Street in the City of Poughkeepsie from Residential Neighborhood A (RNA) to Residential Neighborhood D (RND) for the construction of a 63-apartment unit clustered multifamily development within two buildings with one access off Milton Street. The parcel is identified as parcel number 131300-6162-73-623227 on the City of Poughkeepsie Tax Map. The Town of Poughkeepsie abuts the eastern edge of the property (see Figures 1 and 2).

The parcel is currently undeveloped and zoned for Residential Neighborhood A (RNA) within which multifamily (i.e. 5+ unit) residential development is not permitted. Therefore, to facilitate the proposed project, the Applicant is petitioning the City for a rezoning of the property from RNA to RND by the Common Council. Upon completion of the rezoning, the Applicant will seek site plan approval from the Planning Board.

1.2 Background

On April 25, 2006, the City of Poughkeepsie Planning Board granted site plan approval for the construction of a 120-unit condominium complex to be known as Highview at the Fallkill Creek, located on the north side of Milton Street. The Applicant was Phoenix Capital Partners, LLC. The parcel was zoned as Medium High-Density Residential (R-4) at that time, which would have permitted a maximum of 140 dwelling units based on the R-4 requirements and lot size. The original project was never undertaken, and site plan approvals lapsed. The site was subsequently rezoned to Medium Low-Density Residence District (R-2) in October 2010.

When the Applicant decided to pursue the project again in 2019, the parcel was zoned for Medium Low-Density Residential (R-2) within which multifamily development was not permitted. Therefore, to facilitate the proposed project, the Applicant petitioned the City for a rezoning of the property from R-2 to PRD by the Common Council. The Planning Board as lead agency determined that the action was an unlisted action and upon examination of the Full Environmental Assessment Form (FEAF) and 6 N.Y.C.R.R Section 617.7 of the State Environmental Quality Review Act (SEQRA), adopted a negative declaration on January 20, 2021. The rezoning approval was granted by the Common Council on February 16, 2021 (Common Council Ordinance 0-21-01).

The Common Council and City's Mayor approved the amendment to the Zoning Map on February 18, 2021. On May 25, 2021, the owner filed an application for site plan approval from the Planning Board for the project under the PRD regulations. After filing an area variance application to the Zoning Board of Appeals on June 6, 2021, the Applicant received approval for three area variances on September 14, 2021 to enable the proposed development.

Since then, the application has been on numerous agendas of the Planning Board and multiple extensions have been granted for the rezoning petitions. In addition to Planning Board meetings, the project underwent two community meetings in 2019 and has received support from Councilwoman Flowers, see Attachment A for a letter of support.

On September 6, 2024, a Municipal Consent to Form a Sewage-Works Corporation was approved by the Common Council and the Mayor. On November 4, 2024 the property was rezoned to RNA as part of the Common Council's adoption of the City of Poughkeepsie Zoning Ordinance, along with entire neighborhood of primarily single-family dwellings to the north (which provides the only access to the property).

Accordingly, the Applicant seeks a rezoning to the RND Zoning District to permit the proposed the 63-unit development. The project remains as proposed previously, with no changes to unit count or access.

1.3 Site Description and Project Details

The project parcel is located in the northeast quadrant of the city, along the city/town border, with access to the site on Milton Street by way of Fitchett Street and West Arnold Road. The project site consists of vacant wooded land. Fallkill Creek runs along the western property line and within the property for approximately 200 linear feet. The development proposal, referenced as Highview at the Fallkill Creek – Milton Street, includes 63 multifamily dwelling units clustered within two buildings in the southeast portion of the project parcel. The unit breakdown is anticipated to include approximately 31 one-bedroom and 32 two-bedroom units.

The development will be located away from Milton Street (approximately 209 feet) with a substantial natural buffer. The finished floor of the southern building's (Building 100 on Sheet C130) ground floor will be approximately 18 ft lower than Milton Street. The development will not directly impact wetlands or the Fallkill Creek and is approximately 128.5 – 145.7 feet away from the Creek. The development will occupy approximately 60% of the 8.713-acre property allowing for approximately 40% of the site to remain undisturbed including 373 trees or approximately 67.5% of trees currently found on the site.

1.4 Anticipated List of Approvals

Table 1 provides a list of the approvals/permits that are anticipated for the project.

Table 1: Anticipated Approvals/Permits

AGENCY	APPROVAL/PERMIT
City of Poughkeepsie Common Council	Rezoning from RNA to RND
City of Poughkeepsie Planning Board	Site plan approval
City of Poughkeepsie – Engineering Department	Curb cut approval
City of Poughkeepsie – Zoning Administrator	Floodplain development permit
Dutchess County Department of Planning and Development	GML 239m referral
Dutchess County Department of Health	Water and Sewer Connections

AGENCY	APPROVAL/PERMIT
New York State Department of Environmental Conservation (NYSDEC)	GP-0-25-001 SPDES General Permit for Discharges during Construction Activities; Article 24 Adjacent Area for grading (pending)

2.0 LAND USE, ZONING, AND PLANNING

2.1 Land Use and Zoning

The parcel is currently undeveloped and zoned for Residential Neighborhood A (RNA). To the north and west, the property is abutted by Residential Neighborhood C (RNC) and Industrial Mixed (IM) zoning districts, which house a range of uses including multi-family housing (Highridge Garden Apartments), a junkyard, the City's Department of Public Works complex, and manufacturing uses. The southern portion of the lot abuts more RNA district properties, comprised primarily of single-family residences (Figures 3 and 4). To the east, in the Town of Poughkeepsie, the property is abutted by a parcel zoned for Multifamily Residence (Town of Poughkeepsie) which contains a large apartment complex, Mountain Brook Apartments.

The purpose of the RNA District is to support the development of neighborhoods with single family dwellings on individual lots, as well as to provide for low-impact facilities and uses that benefit from a low-density residential environment, which is similar to that of the previous zoning on this lot (R-2). Table 2 shows the uses that are permitted in this district. multifamily dwellings are not permitted in RNA Districts. Therefore, the Applicant is petitioning the City for a rezoning of the property from RNA to Residential Neighborhood D (RND) by the Common Council to facilitate the development of a 63-unit multifamily residential development.

The rezoning of the property to the RND district, which will permit multifamily residential development and the proposed site design is anticipated to result in a more environmentally sensitive development of the property than that of a traditional single-family home development. Just as was the requirement for the R-2 District, the minimum lot area requirement in the RNA District is 6,000 SF for each single family home; therefore, a maximum of 63 dwellings could theoretically be developed on the site according to the RNA zoning requirements. Under the existing RNA zoning, a cluster development allows for flexibility with site design, but the residential uses permitted in a cluster development are limited to the residential uses permitted in the underlying zoning district. In the RNA District, the residential use is single family detached dwellings, which would preclude apartment development.

Table 2: Residential Neighborhood A (RNA) - Permitted Uses

	Permitted as-of-right
RNA Zoning District	Single-family detached dwellings
	Professional office in a residence
	Short-term rental (§19-5.47)
	Park or recreation facility

	Places of worship (§19-5.40)
	Public or quasi-public community facility
	Community Garden (§19-5.12)
	Day-care center / home
	Membership Club (§19-5.30)
	Permitted by Planning Board Special Permit
	Cluster development (§19-5.10)
	Professional office in a residence
	Golf, tennis, or swimming club (§19-5.20)
	Public, private schools, parochial schools and preschools (§19-5.43)

The Applicant proposes to rezone the property to RND to allow multifamily development within a development that conforms to the parcel's unique environmental character. The property is identified in the 2018 City of Poughkeepsie Natural Resource Inventory by Hudsonia Ltd. as one of the last remaining areas within the City of Poughkeepsie where the Fallkill is not channeled and is permitted to flood naturally. Approximately one-third of the property falls within the City's flood area boundary and contains both upland hardwood forest and upland shrubland habitat. These characteristics make the site ideally suited to the clustering of development away from the creek, which will retain existing habitat. Therefore, rezoning the property to RND is an appropriate alternative given the RND's stated purpose and its innate flexibility that is intended to encourage context-specific housing that responds to the characteristics of a site and the character of the surrounding neighborhood.

The purpose of the RND district zoning is "to provide areas for a broad range of housing types with the opportunity for appropriate nonresidential uses at a fairly high density commensurate with the scale and characteristics of the city's older neighborhoods. These are areas with access to major transportation arteries and a range of community services."[1] The proposed site development meets this purpose as it would provide rental property options in the City.

2.2 Public Policy

City of Poughkeepsie Comprehensive Plan, 2022

The City updated its Comprehensive Plan in 2022 with a focus on three areas: Main Street, the Cottage Street Business District, and the Waterfront. These areas were identified as being critically important to the City's future growth. Other areas of interest updated in the Plan included neighborhood planning issues, the City's Zoning Code, and recreational resources. The Plan outlines the following priorities:

- Improve residential quality of life
- Expand access to good and affordable housing opportunities

[1] City of Poughkeepsie Zoning Code, pg. 26.
https://cityofpoughkeepsie.com/DocumentCenter/View/3627/Zoning-Code

- Strengthen civic life and commercial vitality

According to Part 4 Step 2 of the Plan, "Guidance for Block Selection and Strategy Development," the project parcel is a Type 2 residential block within District B, which calls for "the rehab or inclusive redevelopment of blighted properties … to both preserve city assets while improving access to good housing. At the same time, lower land prices in this part of the city present opportunities for homeownership expansion through rehab of smaller existing properties or sensitive infill."[2]

The proposed rezoning would allow multifamily development within a development that conforms to the parcel's unique environmental character and one that fits with the community's character. Pending the rezoning, the proposed project would bring infill development to a developed part of the City that is comprised of a diverse mix of land uses. The rezoning is anticipated to be consistent with the City's Comprehensive Plan as it would utilize existing zoning regulations to develop a unique site with a development that is consistent with local land uses and zoning.

Dutchess County Hudson River Valley Greenway Compact Plan, 2000

Dutchess County is one of 13 counties that make up the Hudson River Valley Greenway, which was established by the State by the Hudson River Valley Greenway Act of 1991. In March 2000, the Hudson River Valley Greenway Council approved the Dutchess County Greenway Compact Plan, "Greenway Connections: Greenway Compact Program and Guides for Dutchess County Communities." The Greenway was created to facilitate the development of a voluntary regional strategy for preserving scenic, natural, historic, cultural and recreational resources while encouraging compatible economic development and maintaining the tradition of home rule for land use decision-making. By Local Law Number 1 of 2002, the City became a participating community in the Greenway Compact, and adopted a statement of land use policies, principles and guides entitled, "Greenway Connections: Greenway Compact Program and Guides for Dutchess County Communities." The City requires that consideration of the Greenway Compact Plan policies, principles and guides be used to supplement other established land use policies in the City where discretionary decisions are made.

The proposed action to rezone the property from RNA to RND to facilitate the construction of a 63-apartment unit clustered multifamily development will bring infill development to an irregularly shaped parcel that is bound by a mix of land uses, including the Fallkill Creek. The proposed development is anticipated to adhere to the purpose of the RND District as it will provide multifamily housing within a site design that encourages conservation of natural resources. Therefore, the proposed action is consistent with the Greenway Compact Plan as it is anticipated to comply with zoning and is consistent with the Greenway Guide and Comprehensive Plan.

Fallkill Watershed Management Plan, October 2006

The Fallkill Watershed covers 19.5 square miles, including portions of the City of Poughkeepsie. The Fallkill is approximately 38 miles long, and where it travels through the City it has been channelized and is contained by stone walls before it charges into the Hudson

[2] Pk4Keeps Comprehensive Plan, August 2022, pg. 79, https://app.box.com/s/c08qe8jxalq2pvtb1542gb8kz0hd16o7

River. The Fallkill has been evaluated and has been found to contain various chemicals and bacteria, with deterioration being most prevalent within the City. The Plan makes several recommendations to improve the Fallkill, including removal of stone walls channelizing the creek and greater oversight on trash dumping. The vision for this section of the creek is articulated as, "The creek and its immediate environs should be transformed into an attractive community resource that is valued for its aesthetic, recreational, and biological attributes as well as its cultural role in the development and history of the City of Poughkeepsie."[3]

The project site abuts and includes some portions of the Fallkill Creek. No impacts to the Creek, associated wetlands are proposed to occur as part of the proposed project. Pending the approval of the rezoning, a floodplain development permit would be sought for work within the floodplain area, if applicable. The project would be constructed according to a Stormwater Pollution Prevention Plan and proposes connection to the City's storm sewer and sewer systems; therefore, the proposed action will not negatively impact the objectives of the Management Plan.

3.0 COMMUNITY SERVICES

3.1 Emergency Services

Fire emergency/ambulance service is provided by the City of Poughkeepsie. According to the City website, the Fire Department is a 66-man career-staffed department that protects 32,000 people living in an area of 5.72 square miles. It operates three fire stations that respond to over 5,000 calls per year. The City's apparatus includes three engines, two ladder trucks, and a shift commander's vehicle 24/7. The city also has two reserve engines, one ladder truck, one rescue truck, one utility truck, and two river marine units that can be put in service as needed. Water for fire protection is obtained from the City of Poughkeepsie water supply. A truck turning radius plan will be submitted during the site plan review. It is anticipated that there is sufficient firefighting capability to meet the minimal increase in demand related to the proposed 63 new residential units.

Police protection is provided by the City of Poughkeepsie Police Department, with support from Dutchess County Sheriff's Department and NYS Police.

4.0 SOILS AND WATER RESOURCES

4.1 Soils

Figure 5 shows the soil types that are expected to be present on the project site, and Table 3 provides characteristics of these soil types, according to the Dutchess County Soil Survey information available in GIS and the Natural Resource Conservation Service website.

[3] Fall Kill Watershed Management Plan, October 2006, Page 5.

Table 3: Characteristics of Soil Types within Project Area

% of SITE	SOIL SYMBOL	SOIL TYPE	SLOPES	DRAINAGE	DEPTH TO WATER TABLE (FEET)	DEPTH TO BEDROCK (INCHES)
87.4	DwC	Dutchess-Cardigan complex, rolling, rocky	5 to 16%	well	>6	
		Dutchess (40%)		well	>6	>60
		Cardigan (30%)		well	>6	20 to 40
8.3	DxC	Dutchess-Cardigan-Urban Land complex, rolling, rocky	5 to 16%			
		Dutchess (25%)		well	>6	>60
		Cardigan (25%)		well	>6	20 to 40
		Urban Land (25%)		well	>2	>10
4.3	Ud	Udorthents, smoothed	mostly 0 to 8% but 8 to 25% on sides of excavations & along highways	somewhat excessively to moderately well	>3.0 Nov-Jun	>60

Most of the site contains the Dutchess-Cardigan complex, rolling, rocky soil series (DwC). An area of the Dutchess-Cardigan-Urban Land complex soil series (DxC) exists along Milton Street, and an area of Udorthents soil series (Ud) exists in the southwest corner of the project parcel. The Dutchess soils and the Cardigan soils are well drained soils. The Udorthents soil series is a somewhat excessively to moderately well drained soil. Urban Land is described as areas covered by buildings, streets, parking lots and other impervious surfaces, which obscure soil identification, so that the actual identification of the soil is not determined for some portions of the site. The Dutchess soil series, the Cardigan soil series, and the Udorthents soil series all have a depth to water table of greater than 6 feet. Urban Land is described as areas covered by buildings, streets, parking lots and other impervious surfaces which obscure soil identification, so that the actual identification of the soil is not determined for some portions of the site. Therefore, the depth to water table for these areas is unknown and is assumed to be greater than 2 feet according to the Soil Survey.

According to the City of Poughkeepsie's Natural Resources Inventory (NRI) Report, the project site's bedrock geology is Graywacke and shale, which is considered less permeable than other types of bedrock found in the City of Poughkeepsie. The surficial geology of the site features bedrock outcrops. These rock outcrop areas are shown on the concept plan.

According to a geotechnical engineering report by Chazen for the previously approved site plan, groundwater was encountered in only one of eight borings.[4] These borings ranged in depth from 5.5 feet to 15.8 feet due to refusal at bedrock, with the exception of the northernmost boring in which refusal occurred at 2.5 feet. Thus, groundwater was generally deeper than 5.5 feet throughout most of the site. The report states that, "groundwater seepage into open excavations is not anticipated at this time, but that the contractor should be prepared to lower the groundwater table two feet below the base of excavations to provide a stable subgrade for construction activities and to maintain the integrity of the natural bearing soils."

If water is encountered above three feet below the surface, footings and footing drains will be designed in accordance with accepted construction practices to alleviate any problems associated with a high water table. With this practice, no significant impacts due to the presence of water above three feet below the surface are anticipated.

Rock encountered during the construction of the proposed residential development will be removed by mechanical methods (ripping), when possible. If blasting is determined to be necessary, all blasting operations will adhere to New York State and local ordinances governing the use of explosives. Proper program guidelines will be established between New York State, the City of Poughkeepsie and the blasting contractor prior to undertaking this activity. If blasting is required, it will be performed in accordance with New York State Department of Transportation (NYSDOT) Geotechnical Engineering Manual #22 "Procedures for Blasting" latest edition.

Based on this information, the proposed project will not result in any significant adverse impacts related to soils.

4.2 Water Resources

According to NYSDEC wetland and stream information available through GIS (Figure 6), the EAF Mapper, and Environmental Resource Map (Figure 7), there is a NYSDEC Class C stream, Fallkill Creek (Regulation 862-393) that travels along the western edge of the property, with approximately 200 linear feet located within the property boundary. Class C streams are not regulated by the NYSDEC. There is a National Wetland Inventory (NWI) freshwater forested/shrub wetland (PFO1E) located on the western part of the site adjoining the area where the Fallkill Creek flows. The NWI identifies the Fallkill Creek as riverine (R3UBH). NYSDEC Environmental Resource Mapper indicates that there is a DEC informational wetland within this NWI wetland area as well.

Ecological Solutions conducted a site visit on October 15, 2020 to conduct a wetland delineation and habitat assessment. There are 0.788 acres of wetland (associated with the Fallkill Creek) located along the western site boundary. These wetlands are characterized as forested floodplain. Previously, these wetlands were identified as federally regulated. Pending confirmation from the NYSDEC, an Article 24 permit for disturbance in the regulated buffer may be required to allow grading, stormwater, and connection to the existing sewer main. Given that the proposed stormwater will provide water quality treatment and that the

[4] Geotechnical Engineering Report, The Chazen Companies, September 14, 2005.

sewer infrastructure is existing, there are no anticipated significant adverse impacts related to disturbance within the regulated buffer.

The Fall Kill is identified in the Natural Resources Inventory for the City of Poughkeepsie (referred to herein as the NRI Report) as a natural resource that supports or contributes to beautification, habitat, flood control, history, recreation and climate resilience. The project site is discussed throughout the document as a parcel, "that is undeveloped and contains streamside forests and wetlands within the floodplain. Due to the lack of channelization, this area floods readily without harming buildings or roads. It is an important flood mitigation area as it is the only segment of the creek in the City of Poughkeepsie where flooding can naturally occur."[5] The Fall Kill is identified as a conservation priority in the NRI Report because it, "provides streamside habitats, helps to reduce and filter surface runoff, provides shading vegetation, and provides organic material that supports the food web and habitat structure of the stream."[6] Based on this rationale a priority conservation zone of 160 feet from the stream edge is recommended to increase habitat area and improve in-stream conditions.

Per Zoning Section 19-5.17, any structure or use of land for other than parking, recreation or open space shall be located not nearer than 30 feet to the top of the banks of the Fall Kill Creek. The project complies with this requirement as an approximately 128.5 FT buffer is provided from the stream edge, which preserves the existing habitat without fragmentation. The proposed project will not directly impact wetlands and the development area is located approximately 128.5 – 145.7 feet away from the Creek. Furthermore, with the implementation of the Stormwater Pollution Prevention Plan (SWPPP) no significant adverse impacts to wetlands or to the NYSDEC Fallkill Creek will occur as part of the proposed action.

4.3 Floodplain

The property is identified in the NRI Report as one of the last remaining areas within the City of Poughkeepsie where the Fall Kill is not channelized and is permitted to flood naturally. This section of the Fall Kill is identified as a significant habitat area that provides important flood retention due to the undeveloped forested riparian buffer. The NRI Report explains that during flood events the Fall Kill may overflow into these wetlands, which are located within the flood hazard area or 100-year floodplain. According to the NRI Report, "flooding helps to slow down water, recharge groundwater and increase water quality by letting particulates settle out instead of being carried downstream."[7] According to FEMA Community Panel Number 36027C0358E information (effective 5/12/2012) available through GIS (Figure 6), an area abutting the Fallkill Creek is located within Zone AE (100-year floodplain) or special flood hazard area. The floodplain area is identified on the site plan. Some grading (no construction) may occur within the 100-year floodplain; therefore, a floodplain development permit will be sought. There will be a substantial buffer and distance between the proposed development and the Fall Kill and the implementation of the SWPPP will ensure that no significant adverse impacts to the floodplain will occur.

[5] The Environmental Cooperative at Vassar Barns. Natural Resources Inventory for the City of Poughkeepsie. 2019. Page 10.
[6] The Environmental Cooperative at Vassar Barns. Natural Resources Inventory for the City of Poughkeepsie. 2019. Page 73.
[7] The Environmental Cooperative at Vassar Barns. *Natural Resources Inventory for the City of Poughkeepsie*. 2019. Page 46.

5.0 UTILITIES

5.1 Water and Wastewater

Municipal water and sewer service currently serve the project site. According to the New York State Department of Environmental Conservation (NYSDEC) Design Standards for Intermediate Sized Wastewater Treatment Systems, March 2014, the proposed project is expected to require water usage of 11,410± gallons per day. It is anticipated that the City's municipal water system has capacity to serve the proposed use. The Grading and Utility plan (C140) shows a proposed water tap at the 8" water main available at Milton Street. The previous analysis, submitted for the previously proposed 120-unit project approved in 2006, indicated that sufficient pressure and capacity exists to serve the proposed 63-unit project. The Engineer's Report for the water system will be updated to identify current system conditions with regards to static and residual pressure. Sprinkler pressures and flow rates will be identified to assess flow capabilities at the proposed hydrants. Consultation with the Fire Chief will be undertaken at that time as well.

The Grading and Utility plan (C140) shows a sanitary sewer connection to the existing sanitary sewer main that passes through the site. The previous analysis, submitted for the previously proposed 120-unit project approved in 2006, indicated that sufficient capacity exists to serve the proposed 63-unit project. The Engineer's Report for the sanitary sewer will be updated to identify the conditions of the existing sewer main and its capacity during peak flow from the proposed connection point downstream along the Fallkill Creek through to Mansion Street.

Table 4: Anticipated Water Usage/Wastewater Generation

Type of Use	Units	Gallons per Day	Anticipated Use/Generation
Apartment	Per bedroom	110	31 one-bedroom = 3,410 gpd 32 two-bedroom units = 7,040 gpd
Pool	Per swimmer[1]	10	Approximately 720 SF pool = 48 swimmers 48 swimmers x 10 = 480 gpd
Pool House	Per swimmer	10	48 swimmers x 10 = 480 gpd
Total = 11,410 gpd			

[1] Based on NYS Sanitary Code Subpart 6-1, which requires a minimum of 15 SF of pool surface area per swimmer for a shallow pool.

5.2 Stormwater

The proposed project will require greater than one acre of disturbance and will require coverage under the State Pollutant Discharge Elimination System (SPDES) General Permit for Stormwater Discharges from Construction Activity. A SWPPP will be prepared in conformance with the most current New York State Stormwater Management Design Manual and New York State Standards and Specifications for Erosion and Sediment Control. The Grading and Utility Plan (C140) shows the stormwater being conveyed via swales and

subsurface piping to an on-site stormwater bioretention basin. The treated water will outflow to the Fallkill Creek. Therefore, the proposed project is not expected to result in any adverse impacts in regard to stormwater.

6.0 TRAFFIC AND PARKING

6.1 Traffic

The project would feature one, two-way access drive across along Milton Street, between Fitchett Street and West Arnold Road. Site traffic will then use Mansion Street to disperse travel to the north, south, east, and west. Other local roads likely to be used by site traffic include Corlies Avenue, Pershing Avenue, Innis Avenue, and Smith Street.

Dutchess County's PRL Bus Line is conveniently routed through the neighboring Mountain Brook Apartments. Several routes including the B, E and F travel along the East West Arterial, approximately ½ mile south of the site.

The Trip Generation Manual, 11th Edition published by the Institute of Transportation Engineers (ITE) is the industry-standard resource for estimating the traffic generated by various types of land uses and it was used to estimate the site generated trips for this project. Based on data for Multifamily Housing-Mid Rise (Land Use Code 221), the proposed project will generate approximately 26 total trips in the weekday morning and 36 total trips in the evening peak periods, See Table 5. This is a minimum amount of traffic that will be added to the surrounding roadway network, representing about 1 trip every 2 to 3 minutes for the entering and exiting movements.

Table 5: Estimated Traffic Generation

Land Use	**AM Peak Hour Trips Entering the Site**	**AM Peak Hour Trips Exiting the Site**	**Total AM Peak Trips added to Adjacent Street Traffic**	**PM Peak Hour Trips Entering the Site**	**PM Peak Hour Trips Exiting the Site**	**Total PM Peak Trips added to Adjacent Street Traffic**
Multifamily Housing (Mid-Rise) Land Use Code 221	7	19	26	22	14	36

Note: Analysis uses 63 dwelling units and the fitted curve equation in the ITE Manual to determine the AM and PM peak hour trip generation.

A traffic impact study was completed in 2005 for this project. At that time, the project consisted of 163 units and was estimated to generate 76 and 90 total trips for the weekday morning and afternoon peak periods. The traffic study concluded that the project at 163 units would have minimal impact as the studied intersections would continue to operate at acceptable levels of service. Therefore, at the currently proposed 63-units with reduced volumes this project will also have minimal traffic impacts. No improvements are needed.

Additionally, historic traffic volumes collected on roadways in the vicinity of the site were reviewed using NYSDOT's Traffic Data Viewer. The data shows that volumes for Mansion Street, Corlies Avenue, Innis Avenue, and Smith Street have decreased between 2012 and 2019 on the order of 1% to 15%. This is further indication that the surrounding roadways expected to serve the proposed project have the capacity available to accommodate the site traffic.

6.2 Parking

The proposed project is required to provide 79 parking spaces (i.e. 1.25 parking spaces per dwelling unit, 63 units) per Section 19 Article 6 of the City's 2024 Zoning and Land Use Regulations. The proposed project will provide 124 parking spaces; therefore, this requirement will be met.

7.0 VEGETATION AND WILDLIFE

7.1 Endangered, Threatened, and Rare Species and Significant Habitat

According to the NRI Report, the project site is home to several habitats, including upland shrubland, upland hardwood forest, upland mixed forest and hardwood swamp in addition to wetland and stream areas. Table 7 presents a brief description of these habitats based on information found in the report.

Table 6: Habitat Types on the Project Site

Specific Habitat Type	Brief Description
Upland Shrubland	Open (nonforested) area with shrubs making up >20% of ground cover
Upland Hardwood Forest	Non-wetland forest dominated by hardwood trees (conifers make up 25% of canopy)
Upland Mixed Forest	Non-wetland forest with a mix of hardwoods and conifers (conifers make up 25-75% of canopy)
Hardwood Swamp	Wetland (identified by predominance of hydrophytic vegetation) dominated by trees and/or shrubs

According to the NRI Report, "the Fall Kill is highly impacted by channelization and pollution, nonetheless it continues to serve as an important habitat for migratory fish species such as the American eel and river herring." The Upland Hardwood Forest, which currently dominates the site, is described as a habitat that is also important for cooling derived from shade, carbon sequestration, reducing stormwater runoff, and improvement of air quality. According to the NYSDEC Environmental Resource Map (Figure 7), there are known occurrences of the Blanding's Turtle (State listed threatened species) on or in the vicinity of the project site. In a January 21, 2020 letter the NYSDEC stated that they have no records of rare or state-listed

animals or plants, or significant natural communities at the project site. The letter also explained that within 0.8 mile of the project site is a documented location of Blanding's Turtle (Emydoidea blandingii, state listed as Threatened). The turtles may travel 0.8 mile or more from documented locations. An analysis to assess potential adverse impacts to Blandings Turtle was completed and received sign off from the NYSDEC. This information has been submitted separately. There is no NYSDEC Significant Natural Community identified on the project site.

According to the US Fish & Wildlife Service (USFWS) Information for Planning and Consultation[8] (Attachment B), there is potential for the Indiana Bat (endangered), Northern Long-eared Bat (endangered), and Tricolored Bat (proposed endangered) on or in the vicinity of the project site.

The project site is identified in Map 4.4, "Habitat Envelopes and Potential Corridors" within the NRI Report as a Significant Habitat Area. The Report states that, "if new development in these areas cannot be avoided, it should be concentrated near the edges and near existing roads and other development so that as much habitat area as possible is preserved without fragmentation."[9]

Ecological Solutions, LLC completed a threatened and endangered species habitat suitability assessment on October 15, 2020 to assess the existing habitat on site, potential impacts, and possible mitigation for impacts and conservation of the listed species (see Attachment B). Table 8 identifies the habitat that was observed on the site:

Table 7: Habitat Cover Types Identified on the Site

Description	Coverage (acres)	Disturbance (acres)
Fall Kill Creek	1.0	0
Rich Mesophytic Forest	4.7	2.5
Upland Meadow	2.8	0

Rich Mesophytic Forest: The site slopes generally contain rich mesophytic forest upslope of the Fallkill Creek. The dominant trees include a mixture of the following: red maple (Acer rubrum), white ash Fraxinus americana), red oak (Quercus rubra), and black oak (Q. velutina). There is a subcanopy stratum of small trees and tall shrubs dominated by flowering dogwood (Cornus florida), red maple, and black cherry (Prunus serotina). The overstory trees are generally large in the 12 to 24+ inch range with several larger oaks and other tree species on the site. Debris/trash is located in areas throughout the forest.

Fallkill Creek: The Fallkill Creek and associated wetland fringe is located along and is part of the western site boundary. The wetland fringe associated with the Creek is forested floodplain.

Upland Meadow: Within the forested area are openings or pockets upland meadow.

[8] Note there is no federal action involved so a formal consultation under Section 7 is not required.
[9] The Environmental Cooperative at Vassar Barns. Natural Resources Inventory for the City of Poughkeepsie. 2019. Page 221 or page 85 of Appendix A.

Blanding's Turtle

Blanding's turtles are a mobile species that utilize a variety of wetland and upland habitats for nesting, foraging, overwintering, and drought refuges. Characteristics that indicate core habitat are: shrubby pools/ponds with permanent or intermittent hydroperiod with little flow through; high water depths of 0.5–4.0 feet; tree canopy open or absent; tree fringe present; and a dense cover of shrubs, forbs, lemnids or nymphaeids, with coarse and fine organic debris. In addition to core wetlands it is known that Blanding's turtles use a complex of habitat types during different periods in their life cycle. According to the NYSDEC it is a semi-aquatic species that uses a variety of wetland and upland habitats. Wetland habitat usage by Blanding's turtles includes different types of freshwater systems such as emergent marshes, woodland pools, red maple swamps, buttonbush kettle-holes, ponds including excavated ponds, lakes, rivers, and streams. Juvenile Blanding's are normally associated with shallower water and more densely vegetated habitats as compared to that of adults. Open meadows especially with Hoosic gravelly soils are preferred nesting habitats. Upland forest area provides shade during turtle travel and migration.

Based on information gathered during the Habitat Assessment, there is no core habitat on/or immediately adjacent to the site. There are no mapped Hoosic soils on the site. Hoosic soils are associated with turtle nesting when covered by low growing sparsely vegetated upland meadow/agriculture area. The Fallkill Creek may have been utilized in the distant past by this species in some capacity for travel and dispersal but today is unlikely due to the extensive development in this area of the City of Poughkeepsie and lack of potential habitat as a destination. There are no impacts to this species since there is no potential habitat on the site or in the vicinity of the site. As stated above, an analysis to assess potential adverse impacts to Blandings Turtle was completed and received sign off from the NYSDEC. This information has been submitted separately.

Indiana Bat, Northern Long-eared Bat, Tricolored Bat

The bats typically hibernate in caves/mines in the winter and roosts under bark or in tree crevices in the spring, summer, and fall. The hibernacula - Williams Lake Complex is about 10 miles from the site. Suitable potential summer roosting habitat is characterized by trees (dead, dying, or alive) or snags with exfoliating or defoliating bark, or containing cracks or crevices that could potentially be used by Indiana bats as a roost. The minimum diameter of roost trees observed to date is 2.5 inches for males and 4.3 inches for females. However, maternity colonies generally use trees greater than or equal to 9 inches dbh. Overall, roost tree structure appears to be more important to Indiana bats than a particular tree species or habitat type. Females appear to be more habitat specific than males presumably because of the warmer temperature requirements associated with gestation and rearing of young. As a result, they are generally found at lower elevations than males may be found. Roosts are warmed by direct exposure to solar radiation, thus trees exposed to extended periods of direct sunlight are preferred over those in shaded areas. However, shaded roosts may be preferred in very hot conditions. As larger trees afford a greater thermal mass for heat retention, they appear to be preferred over smaller trees. Streams associated with floodplain forests, and impounded water bodies (ponds, wetlands, reservoirs, etc.) where abundant supplies of flying insects are likely found provide preferred foraging habitat for Indiana bats, some of which may fly up to 2-5 miles from upland roosts on a regular basis. Indiana bats also forage within the canopy of upland forests, over clearings with early successional vegetation

(e.g., old fields), along the borders of croplands, along wooded fencerows, and over farm ponds in pastures. While Indiana Bats appear to forage in a wide variety of habitats, they seem to tend to stay fairly close to tree cover. The rich mesophytic forest described in Table 8 occupies about 4.7 acres of the 8.7 acres site. This forested area contains many large trees in the 24+ inch dbh range with some containing holes and crevices that could provide foraging habitat for this species.

Construction of the project will occur over a 6-month – 1-year period. Activities during construction will include grading and earth-moving, building construction, addition of electric lights, increasing impervious surface area and altering site drainage will occur. The project may result in direct and indirect effects on Indiana bats by altering the quality and quantity of their summer habitat including removing trees, generating noise during construction, and creating visual disturbances. There will be an increase in vehicular traffic, parking, and maintenance activities which are anticipated effects from construction and operation of the project to bats.

Since the USFWS list of species for the site indicated that the site is within the range of the threatened/endangered bat, the Applicant will incorporate the following conservation measures to ensure no impact occurs to this species.

Effects from Tree Clearing: Clearing activities could have an adverse impact on foraging and roosting activities. Such impacts will be avoided by conducting all clearing during winter months when bats will be in hibernation off site. Proposed clearing for the project will remove ±2.5 acres of forested habitat. The project will avoid impacts by:

- Implementing tree clearing for site activities during timeframes when bats are not resident on the site October 1 – to March 31 or unless approved by the NYSDEC outside this timeframe, and

- Prior to clearing, the limits of proposed clearing will be clearly demarcated on the site with orange construction fencing (or similar) to prevent inadvertent overclearing of the site since about 2.3 acres of forested habitat will remain.

Effects from Lighting: Site lighting is anticipated after development of the site. To avoid impacts to foraging or roosting bats street lighting on the site will use City of Poughkeepsie Planning Board approved light fixtures that have tops that direct light down to minimize light pollution and not interfere with potential bat foraging activities. These measures will result in minimizing potential adverse effects to Indiana bats so that adverse effects to this species are deemed unlikely.

As explained in earlier sections, a large buffer (131 feet) and distance (146 – 160 feet away) will separate the Fall Kill Creek from the proposed development. Based on the information provided above, no significant adverse impacts will occur to vegetation and wildlife. This information will be provided to NYSDEC.

8.0 HISTORIC AND ARCHEOLOGICAL RESOURCES

According to the NYS Office of Parks, Recreation, and Historic Preservation (NYSOPRHP) Cultural Resource Information System (CRIS) mapping (Figure 8), the project site does not

contain and is not adjacent to any National or State Historic Register sites or any sites that were determined to be eligible for listing on the National or State Historic Register. The Applicant received a Letter of No Effect from the NYSOPRHP State Historic Preservation Office on December 17, 2020.

FULL ENVIRONMENTAL ASSESSMENT FORM (FEAF) PART 1 FORM

Instructions for Completing Part 1

Part 1 is to be completed by the applicant or project sponsor. Responses become part of the application for approval or funding, are subject to public review, and may be subject to further verification.

Complete Part 1 based on information currently available. If additional research or investigation would be needed to fully respond to any item, please answer as thoroughly as possible based on current information; indicate whether missing information does not exist, or is not reasonably available to the sponsor; and, when possible, generally describe work or studies which would be necessary to update or fully develop that information.

Applicants/sponsors must complete all items in Sections A & B. In Sections C, D & E, most items contain an initial question that must be answered either "Yes" or "No". If the answer to the initial question is "Yes", complete the sub-questions that follow. If the answer to the initial question is "No", proceed to the next question. Section F allows the project sponsor to identify and attach any additional information. Section G requires the name and signature of the applicant or project sponsor to verify that the information contained in Part 1is accurate and complete.

A. Project and Applicant/Sponsor Information.

Name of Action or Project: Highview at the Fallkill Creek		
Project Location (describe, and attach a general location map): Milton Street, City of Poughkeepsie, Dutchess County, New York		
Brief Description of Proposed Action (include purpose or need): The Applicant and Owner, Maselo Realty, LLC, is proposing the rezoning of an 8.713-acre tax parcel on Milton Street in the City of Poughkeepsie from Residential Neighborhood A (RNA) to Residential Neighborhood D (RND) for the construction of a 63-apartment unit clustered multifamily development within two buildings with access off Milton Street. The parcel is identified as parcel number 131300-6162-73-623227 on the City of Poughkeepsie Tax Map. The Town of Poughkeepsie abuts the eastern edge of the property (see Figures 1 and 2). The parcel is currently undeveloped and zoned for Residential Neighborhood A (RNA) within which multifamily (i.e. 5+ unit) residential development is not permitted. Therefore, to facilitate the proposed project, the Applicant is petitioning the City for a rezoning of the property from RNA to RND by the Common Council. Upon completion of the rezoning, the Applicant will seek site plan approval from the Planning Board.		
Name of Applicant/Sponsor: Maselo Realty, LLC (Simon Abikhzer)	Telephone: 845-341-7395 E-Mail: simonabikzer@gmail.com	
Address: 18 Eastview Road		
City/PO: Monsey	State: NY	Zip Code: 10952
Project Contact (if not same as sponsor; give name and title/role):	Telephone: E-Mail:	
Address:		
City/PO:	State:	Zip Code:
Property Owner (if not same as sponsor):	Telephone: E-Mail:	
Address:		
City/PO:	State:	Zip Code:

B. Government Approvals

B. Government Approvals, Funding, or Sponsorship. ("Funding" includes grants, loans, tax relief, and any other forms of financial assistance.)		
Government Entity	**If Yes: Identify Agency and Approval(s) Required**	**Application Date (Actual or projected)**
a. City Counsel, Town Board, or Village Board of Trustees ☑Yes ☐No	City of Poughkeepsie Common Council - Rezoning to RND	Fall/Winter 2025
b. City, Town or Village Planning Board or Commission ☑Yes ☐No	City of Poughkeepsie Planning Board - Site Plan Approval	Fall/Winter 2025
c. City, Town or Village Zoning Board of Appeals ☐Yes ☑No		
d. Other local agencies ☑Yes ☐No	City Engineering Dept. - Curb Cut approval; City Zoning Administrator - Floodplain development	Winter/Spring 2026
e. County agencies ☑Yes ☐No	Dutchess County Planning Department - GML 239m Referral; Health Department - Utility Conn.	Fall/Winter 2025
f. Regional agencies ☐Yes ☑No		
g. State agencies ☑Yes ☐No	NYS Department of Environmental Conservation: GP-0-25-001, Article 24 Adjacent Area for grading	Summer/Fall 2026
h. Federal agencies ☐Yes ☑No		

i. Coastal Resources.
i. Is the project site within a Coastal Area, or the waterfront area of a Designated Inland Waterway? ☐Yes ☑No

ii. Is the project site located in a community with an approved Local Waterfront Revitalization Program? ☐Yes ☑No

iii. Is the project site within a Coastal Erosion Hazard Area? ☐Yes ☑No

C. Planning and Zoning

C.1. Planning and zoning actions.

Will administrative or legislative adoption, or amendment of a plan, local law, ordinance, rule or regulation be the only approval(s) which must be granted to enable the proposed action to proceed? ☐Yes ☑No

- **If Yes,** complete sections C, F and G.
- **If No,** proceed to question C.2 and complete all remaining sections and questions in Part 1

C.2. Adopted land use plans.

a. Do any municipally- adopted (city, town, village or county) comprehensive land use plan(s) include the site where the proposed action would be located? ☑Yes ☐No

If Yes, does the comprehensive plan include specific recommendations for the site where the proposed action would be located? ☐Yes ☑No

b. Is the site of the proposed action within any local or regional special planning district (for example: Greenway; Brownfield Opportunity Area (BOA); designated State or Federal heritage area; watershed management plan; or other?) ☑Yes ☐No

If Yes, identify the plan(s):

Hudson River National Heritage Area; Fall Kill Watershed Management Plan, October 2006; Dutchess County Hudson River Valley Greenway Compact Plan, 2000

c. Is the proposed action located wholly or partially within an area listed in an adopted municipal open space plan, or an adopted municipal farmland protection plan? ☐Yes ☑No

If Yes, identify the plan(s):

C.3. Zoning

a. Is the site of the proposed action located in a municipality with an adopted zoning law or ordinance. ☑ Yes ☐ No
If Yes, what is the zoning classification(s) including any applicable overlay district?
Residential Neighborhood A (RNA). See Sections 1.2 and 2.1 for more details.

b. Is the use permitted or allowed by a special or conditional use permit? ☑ Yes ☐ No

c. Is a zoning change requested as part of the proposed action? ☑ Yes ☐ No
If Yes,
i. What is the proposed new zoning for the site? Residential Neighborhood D (RND).

C.4. Existing community services.

a. In what school district is the project site located? Poughkeepsie City School District

b. What police or other public protection forces serve the project site?
City of Poughkeepsie Police Department with support from Dutchess County Sheriff's Department and NYS Police

c. Which fire protection and emergency medical services serve the project site?
City of Poughkeepsie Fire Department

d. What parks serve the project site?
Mansion Square Park

D. Project Details

D.1. Proposed and Potential Development

a. What is the general nature of the proposed action (e.g., residential, industrial, commercial, recreational; if mixed, include all components)? Residential apartments

b. a. Total acreage of the site of the proposed action? 8.713 acres
b. Total acreage to be physically disturbed? 5.26 acres
c. Total acreage (project site and any contiguous properties) owned or controlled by the applicant or project sponsor? 8.713 acres

c. Is the proposed action an expansion of an existing project or use? ☐ Yes ☑ No
i. If Yes, what is the approximate percentage of the proposed expansion and identify the units (e.g., acres, miles, housing units, square feet)? % _____ Units: _____

d. Is the proposed action a subdivision, or does it include a subdivision? ☐ Yes ☑ No
If Yes,
i. Purpose or type of subdivision? (e.g., residential, industrial, commercial; if mixed, specify types)
ii. Is a cluster/conservation layout proposed? ☐ Yes ☐ No
iii. Number of lots proposed? _____
iv. Minimum and maximum proposed lot sizes? Minimum _____ Maximum _____

e. Will the proposed action be constructed in multiple phases? ☐ Yes ☑ No
i. If No, anticipated period of construction: 12 months
ii. If Yes:
- Total number of phases anticipated _____
- Anticipated commencement date of phase 1 (including demolition) _____ month _____ year
- Anticipated completion date of final phase _____ month _____ year
- Generally describe connections or relationships among phases, including any contingencies where progress of one phase may determine timing or duration of future phases: _____

f. Does the project include new residential uses? ☑ Yes ☐ No

If Yes, show numbers of units proposed.

	One Family	Two Family	Three Family	Multiple Family (four or more)
Initial Phase				63 apartments
At completion of all phases				

g. Does the proposed action include new non-residential construction (including expansions)? ☐ Yes ☑ No

If Yes,

i. Total number of structures _____

ii. Dimensions (in feet) of largest proposed structure: _____ height; _____ width; and _____ length

iii. Approximate extent of building space to be heated or cooled: _____ square feet

h. Does the proposed action include construction or other activities that will result in the impoundment of any liquids, such as creation of a water supply, reservoir, pond, lake, waste lagoon or other storage? ☐ Yes ☑ No

If Yes,

i. Purpose of the impoundment: _____

ii. If a water impoundment, the principal source of the water: ☐ Ground water ☐ Surface water streams ☐ Other specify:

_____

iii. If other than water, identify the type of impounded/contained liquids and their source.

_____

iv. Approximate size of the proposed impoundment. Volume: _____ million gallons; surface area: _____ acres

v. Dimensions of the proposed dam or impounding structure: _____ height; _____ length

vi. Construction method/materials for the proposed dam or impounding structure (e.g., earth fill, rock, wood, concrete):

_____

D.2. Project Operations

a. Does the proposed action include any excavation, mining, or dredging, during construction, operations, or both? (Not including general site preparation, grading or installation of utilities or foundations where all excavated materials will remain onsite) ☐ Yes ☑ No

If Yes:

i .What is the purpose of the excavation or dredging? _____

ii. How much material (including rock, earth, sediments, etc.) is proposed to be removed from the site?

- Volume (specify tons or cubic yards): _____
- Over what duration of time? _____

iii. Describe nature and characteristics of materials to be excavated or dredged, and plans to use, manage or dispose of them.

_____

_____

iv. Will there be onsite dewatering or processing of excavated materials? ☐ Yes ☐ No

If yes, describe. _____

_____

v. What is the total area to be dredged or excavated? _____ acres

vi. What is the maximum area to be worked at any one time? _____ acres

vii. What would be the maximum depth of excavation or dredging? _____ feet

viii. Will the excavation require blasting? ☐ Yes ☐ No

ix. Summarize site reclamation goals and plan: _____

_____

_____

b. Would the proposed action cause or result in alteration of, increase or decrease in size of, or encroachment into any existing wetland, waterbody, shoreline, beach or adjacent area? ☐ Yes ☑ No

If Yes:

i. Identify the wetland or waterbody which would be affected (by name, water index number, wetland map number or geographic description): _____

_____

ii. Describe how the proposed action would affect that waterbody or wetland, e.g. excavation, fill, placement of structures, or alteration of channels, banks and shorelines. Indicate extent of activities, alterations and additions in square feet or acres:

iii. Will the proposed action cause or result in disturbance to bottom sediments? ☐Yes ☐No
If Yes, describe:

iv. Will the proposed action cause or result in the destruction or removal of aquatic vegetation? ☐Yes ☐No
If Yes:

- acres of aquatic vegetation proposed to be removed:
- expected acreage of aquatic vegetation remaining after project completion:
- purpose of proposed removal (e.g. beach clearing, invasive species control, boat access):
- proposed method of plant removal:
- if chemical/herbicide treatment will be used, specify product(s):

v. Describe any proposed reclamation/mitigation following disturbance:

c. Will the proposed action use, or create a new demand for water? ☑Yes ☐No
If Yes:

i. Total anticipated water usage/demand per day: 11,410 gallons/day

ii. Will the proposed action obtain water from an existing public water supply? ☑Yes ☐No
If Yes:

- Name of district or service area: City of Poughkeepsie
- Does the existing public water supply have capacity to serve the proposal? ☑Yes ☐No
- Is the project site in the existing district? ☑Yes ☐No
- Is expansion of the district needed? ☐Yes ☑No
- Do existing lines serve the project site? ☑Yes ☐No

iii. Will line extension within an existing district be necessary to supply the project? ☐Yes ☑No
If Yes:

- Describe extensions or capacity expansions proposed to serve this project:
- Source(s) of supply for the district:

iv. Is a new water supply district or service area proposed to be formed to serve the project site? ☐ Yes ☑No
If, Yes:

- Applicant/sponsor for new district:
- Date application submitted or anticipated:
- Proposed source(s) of supply for new district:

v. If a public water supply will not be used, describe plans to provide water supply for the project:

vi. If water supply will be from wells (public or private), what is the maximum pumping capacity: _____ gallons/minute.

d. Will the proposed action generate liquid wastes? ☑Yes ☐No
If Yes:

i. Total anticipated liquid waste generation per day: 11,410 gallons/day

ii. Nature of liquid wastes to be generated (e.g., sanitary wastewater, industrial; if combination, describe all components and approximate volumes or proportions of each):
Sanitary wastewater

iii. Will the proposed action use any existing public wastewater treatment facilities? ☑Yes ☐No
If Yes:

- Name of wastewater treatment plant to be used: City of Poughkeepsie Sewage Treatment Plant
- Name of district: City of Poughkeepsie
- Does the existing wastewater treatment plant have capacity to serve the project? ☑Yes ☐No
- Is the project site in the existing district? ☑Yes ☐No
- Is expansion of the district needed? ☐Yes ☑No

- Do existing sewer lines serve the project site? ☑ Yes ☐ No
- Will a line extension within an existing district be necessary to serve the project? ☐ Yes ☑ No

If Yes:

- Describe extensions or capacity expansions proposed to serve this project: _____

iv. Will a new wastewater (sewage) treatment district be formed to serve the project site? ☐ Yes ☑ No

If Yes:

- Applicant/sponsor for new district: _____
- Date application submitted or anticipated: _____
- What is the receiving water for the wastewater discharge? _____

v. If public facilities will not be used, describe plans to provide wastewater treatment for the project, including specifying proposed receiving water (name and classification if surface discharge or describe subsurface disposal plans):

vi. Describe any plans or designs to capture, recycle or reuse liquid waste: _____

e. Will the proposed action disturb more than one acre and create stormwater runoff, either from new point sources (i.e. ditches, pipes, swales, curbs, gutters or other concentrated flows of stormwater) or non-point source (i.e. sheet flow) during construction or post construction? ☑ Yes ☐ No

If Yes:

i. How much impervious surface will the project create in relation to total size of project parcel?

_____ Square feet or 1.84 acres (impervious surface)

_____ Square feet or 8.713 acres (parcel size)

ii. Describe types of new point sources. Subsurface piping and outflow.

iii. Where will the stormwater runoff be directed (i.e. on-site stormwater management facility/structures, adjacent properties, groundwater, on-site surface water or off-site surface waters)?

Stormwater will be conveyed via swales and subsurface piping to an on-site stormwater bioretention basin. The treated water will outflow to the Fallkill Creek.

- If to surface waters, identify receiving water bodies or wetlands: Fallkill Creek
- Will stormwater runoff flow to adjacent properties? ☐ Yes ☑ No

iv. Does the proposed plan minimize impervious surfaces, use pervious materials or collect and re-use stormwater? ☑ Yes ☐ No

f. Does the proposed action include, or will it use on-site, one or more sources of air emissions, including fuel combustion, waste incineration, or other processes or operations? ☑ Yes ☐ No

If Yes, identify:

i. Mobile sources during project operations (e.g., heavy equipment, fleet or delivery vehicles)

ii. Stationary sources during construction (e.g., power generation, structural heating, batch plant, crushers)

Temporary impacts during construction.

iii. Stationary sources during operations (e.g., process emissions, large boilers, electric generation)

Natural gas, boilers

g. Will any air emission sources named in D.2.f (above), require a NY State Air Registration, Air Facility Permit, or Federal Clean Air Act Title IV or Title V Permit? ☐ Yes ☑ No

If Yes:

i. Is the project site located in an Air quality non-attainment area? (Area routinely or periodically fails to meet ambient air quality standards for all or some parts of the year) ☐ Yes ☐ No

ii. In addition to emissions as calculated in the application, the project will generate:

- _____Tons/year (short tons) of Carbon Dioxide (CO_2)
- _____Tons/year (short tons) of Nitrous Oxide (N_2O)
- _____Tons/year (short tons) of Perfluorocarbons (PFCs)
- _____Tons/year (short tons) of Sulfur Hexafluoride (SF_6)
- _____Tons/year (short tons) of Carbon Dioxide equivalent of Hydroflourocarbons (HFCs)
- _____Tons/year (short tons) of Hazardous Air Pollutants (HAPs)

h. Will the proposed action generate or emit methane (including, but not limited to, sewage treatment plants, landfills, composting facilities)? ☐Yes ☑No

If Yes:

i. Estimate methane generation in tons/year (metric): _____

ii. Describe any methane capture, control or elimination measures included in project design (e.g., combustion to generate heat or electricity, flaring): _____

i. Will the proposed action result in the release of air pollutants from open-air operations or processes, such as quarry or landfill operations? ☐Yes ☑No

If Yes: Describe operations and nature of emissions (e.g., diesel exhaust, rock particulates/dust):

_____

j. Will the proposed action result in a substantial increase in traffic above present levels or generate substantial new demand for transportation facilities or services? ☑Yes ☐No

See Section 6 for details.

If Yes:

i. When is the peak traffic expected (Check all that apply): ☑ Morning ☑ Evening ☐Weekend ☐ Randomly between hours of _____ to _____.

ii. For commercial activities only, projected number of truck trips/day and type (e.g., semi trailers and dump trucks): _____

iii. Parking spaces: Existing 0 Proposed 124 Net increase/decrease +124

iv. Does the proposed action include any shared use parking? ☐Yes ☑No

v. If the proposed action includes any modification of existing roads, creation of new roads or change in existing access, describe:

Access will be provided off Milton Street in a one-way access pattern.

vi. Are public/private transportation service(s) or facilities available within ½ mile of the proposed site? ☑Yes ☐No

vii Will the proposed action include access to public transportation or accommodations for use of hybrid, electric or other alternative fueled vehicles? ☐Yes ☑No

viii. Will the proposed action include plans for pedestrian or bicycle accommodations for connections to existing pedestrian or bicycle routes? ☑Yes ☐No

k. Will the proposed action (for commercial or industrial projects only) generate new or additional demand for energy? ☐Yes ☑No

If Yes:

i. Estimate annual electricity demand during operation of the proposed action: _____

ii. Anticipated sources/suppliers of electricity for the project (e.g., on-site combustion, on-site renewable, via grid/local utility, or other):

_____

iii. Will the proposed action require a new, or an upgrade, to an existing substation? ☐Yes ☐No

l. Hours of operation. Answer all items which apply.

i. During Construction:

- Monday - Friday: Approximately 6:30 AM to 9:00 PM
- Saturday: Approximately 6:30 AM to 9:00 PM
- Sunday: None
- Holidays: None

ii. During Operations:

- Monday - Friday: 24 hours
- Saturday: 24 hours
- Sunday: 24 hours
- Holidays: 24 hours

m. Will the proposed action produce noise that will exceed existing ambient noise levels during construction, operation, or both? ☑ Yes ☐ No

If yes:

i. Provide details including sources, time of day and duration:

Temporary noise generated during construction activities will be limited to weekdays 6:30 AM to 9 PM.

ii. Will the proposed action remove existing natural barriers that could act as a noise barrier or screen? ☑ Yes ☐ No

Describe: The majority of the site is undeveloped wooded area. Approximately 2.246 acres will be cleared; Landscaping pursuant to Zoning Ordinance requirements will be implemented.

n. Will the proposed action have outdoor lighting? ☑ Yes ☐ No

If yes:

i. Describe source(s), location(s), height of fixture(s), direction/aim, and proximity to nearest occupied structures:

To be determined

ii. Will proposed action remove existing natural barriers that could act as a light barrier or screen? ☑ Yes ☐ No

Describe: The majority of the site is undeveloped wooded area. Approximately 2.246 acres will be cleared; Lighting pursuant to Zoning Ordinance requirements will be implemented.

o. Does the proposed action have the potential to produce odors for more than one hour per day? ☐ Yes ☑ No

If Yes, describe possible sources, potential frequency and duration of odor emissions, and proximity to nearest occupied structures: _____

p. Will the proposed action include any bulk storage of petroleum (combined capacity of over 1,100 gallons) or chemical products 185 gallons in above ground storage or any amount in underground storage? ☐ Yes ☑ No

If Yes:

i. Product(s) to be stored _____

ii. Volume(s) _____ per unit time _____ (e.g., month, year)

iii. Generally, describe the proposed storage facilities: _____

q. Will the proposed action (commercial, industrial and recreational projects only) use pesticides (i.e., herbicides, insecticides) during construction or operation? ☐ Yes ☑ No

If Yes:

i. Describe proposed treatment(s):

ii. Will the proposed action use Integrated Pest Management Practices? ☐ Yes ☐ No

r. Will the proposed action (commercial or industrial projects only) involve or require the management or disposal of solid waste (excluding hazardous materials)? ☐ Yes ☑ No

If Yes:

i. Describe any solid waste(s) to be generated during construction or operation of the facility:

- Construction: _____ tons per _____ (unit of time)
- Operation : _____ tons per _____ (unit of time)

ii. Describe any proposals for on-site minimization, recycling or reuse of materials to avoid disposal as solid waste:

- Construction: _____
- Operation: _____

iii. Proposed disposal methods/facilities for solid waste generated on-site:

- Construction: _____
- Operation: _____

s. Does the proposed action include construction or modification of a solid waste management facility? ☐ Yes ☑ No

If Yes:

i. Type of management or handling of waste proposed for the site (e.g., recycling or transfer station, composting, landfill, or other disposal activities): _____

ii. Anticipated rate of disposal/processing:

- _____ Tons/month, if transfer or other non-combustion/thermal treatment, or
- _____ Tons/hour, if combustion or thermal treatment

iii. If landfill, anticipated site life: _____ years

t. Will the proposed action at the site involve the commercial generation, treatment, storage, or disposal of hazardous waste? ☐ Yes ☑ No

If Yes:

i. Name(s) of all hazardous wastes or constituents to be generated, handled or managed at facility: _____

ii. Generally describe processes or activities involving hazardous wastes or constituents: _____

iii. Specify amount to be handled or generated _____ tons/month

iv. Describe any proposals for on-site minimization, recycling or reuse of hazardous constituents: _____

v. Will any hazardous wastes be disposed at an existing offsite hazardous waste facility? ☐ Yes ☐ No

If Yes: provide name and location of facility: _____

If No: describe proposed management of any hazardous wastes which will not be sent to a hazardous waste facility:

E. Site and Setting of Proposed Action

E.1. Land uses on and surrounding the project site

a. Existing land uses.

i. Check all uses that occur on, adjoining and near the project site.

☑ Urban ☑ Industrial ☑ Commercial ☑ Residential (suburban) ☐ Rural (non-farm)
☐ Forest ☐ Agriculture ☑ Aquatic ☑ Other (specify): public services

ii. If mix of uses, generally describe:

b. Land uses and covertypes on the project site.

Land use or Covertype	Current Acreage	Acreage After Project Completion	Change (Acres +/-)
• Roads, buildings, and other paved or impervious surfaces	0.000	1.84	+1.84
• Forested	7.755	3.306	-4.449
• Meadows, grasslands or brushlands (non-agricultural, including abandoned agricultural)	0	2.609	+2.609
• Agricultural (includes active orchards, field, greenhouse etc.)	0	0	0
• Surface water features (lakes, ponds, streams, rivers, etc.)	0	0	0
• Wetlands (freshwater or tidal)	0.788	0.778	0
• Non-vegetated (bare rock, earth or fill)	0.17	0.17	0
• Other Describe: _____			

c. Is the project site presently used by members of the community for public recreation? ☐ Yes ☑ No

i. If Yes: explain: _____

d. Are there any facilities serving children, the elderly, people with disabilities (e.g., schools, hospitals, licensed day care centers, or group homes) within 1500 feet of the project site? ☐ Yes ☑ No

If Yes,

i. Identify Facilities:

_____

_____

e. Does the project site contain an existing dam? ☐ Yes ☑ No

If Yes:

i. Dimensions of the dam and impoundment:

- Dam height: _____ feet
- Dam length: _____ feet
- Surface area: _____ acres
- Volume impounded: _____ gallons OR acre-feet

ii. Dam's existing hazard classification: _____

iii. Provide date and summarize results of last inspection:

_____

_____

f. Has the project site ever been used as a municipal, commercial or industrial solid waste management facility, or does the project site adjoin property which is now, or was at one time, used as a solid waste management facility? ☐ Yes ☑ No

If Yes:

i. Has the facility been formally closed? ☐ Yes ☐ No

- If yes, cite sources/documentation: _____

ii. Describe the location of the project site relative to the boundaries of the solid waste management facility:

_____

_____

iii. Describe any development constraints due to the prior solid waste activities: _____

_____

g. Have hazardous wastes been generated, treated and/or disposed of at the site, or does the project site adjoin property which is now or was at one time used to commercially treat, store and/or dispose of hazardous waste? ☐ Yes ☑ No

If Yes:

i. Describe waste(s) handled and waste management activities, including approximate time when activities occurred:

_____

_____

h. Potential contamination history. Has there been a reported spill at the proposed project site, or have any remedial actions been conducted at or adjacent to the proposed site? ☐ Yes ☐ No

If Yes:

i. Is any portion of the site listed on the NYSDEC Spills Incidents database or Environmental Site Remediation database? Check all that apply: ☐ Yes ☐ No

☐ Yes – Spills Incidents database — Provide DEC ID number(s): _____

☐ Yes – Environmental Site Remediation database — Provide DEC ID number(s): _____

☐ Neither database

ii. If site has been subject of RCRA corrective activities, describe control measures: _____

_____

_____

iii. Is the project within 2000 feet of any site in the NYSDEC Environmental Site Remediation database? ☑ Yes ☐ No

If yes, provide DEC ID number(s): 314136

iv. If yes to (i), (ii) or (iii) above, describe current status of site(s):

DEC Spill database indicates that there are no spills on site. Therefore, this spill must be off-site.

_____

v. Is the project site subject to an institutional control limiting property uses? ☐ Yes ☑ No

- If yes, DEC site ID number: _____
- Describe the type of institutional control (e.g., deed restriction or easement): _____
- Describe any use limitations: _____
- Describe any engineering controls: _____
- Will the project affect the institutional or engineering controls in place? ☐ Yes ☐ No
- Explain: _____

E.2. Natural Resources On or Near Project Site

a. What is the average depth to bedrock on the project site? <1 ft to > 5 feet

b. Are there bedrock outcroppings on the project site? ☐ Yes ☐ No
If Yes, what proportion of the site is comprised of bedrock outcroppings? 1 %

c. Predominant soil type(s) present on project site:

Dutchess Cardigan Complex (DwC)	87.4 %
Dutchess Cardigan Urban (DxC)	8.3 %
Udorthents	4.3 %

d. What is the average depth to the water table on the project site? Average: > 2 ft to > 6 feet

e. Drainage status of project site soils:

☑ Well Drained:	99 % of site
☑ Moderately Well Drained:	1 % of site
☐ Poorly Drained	% of site

f. Approximate proportion of proposed action site with slopes:

☑ 0-10%:	note % of site
☑ 10-15%:	note % of site
☑ 15% or greater:	note % of site

Note: See Section 4.

g. Are there any unique geologic features on the project site? ☐ Yes ☑ No
If Yes, describe: _____

h. Surface water features.

i. Does any portion of the project site contain wetlands or other waterbodies (including streams, rivers, ponds or lakes)? ☑ Yes ☐ No

ii. Do any wetlands or other waterbodies adjoin the project site? See Section 4 for details. ☑ Yes ☐ No

If Yes to either *i* or *ii*, continue. If No, skip to E.2.i.

iii. Are any of the wetlands or waterbodies within or adjoining the project site regulated by any federal, state or local agency? ☑ Yes ☐ No

iv. For each identified regulated wetland and waterbody on the project site, provide the following information:

- Streams: Name 862-393 Classification C
- Lakes or Ponds: Name _____ Classification _____
- Wetlands: Name Federal Waters, Federal Waters, Federal Waters,... Approximate Size 0.788 acres
- Wetland No. (if regulated by DEC) _____

v. Are any of the above water bodies listed in the most recent compilation of NYS water quality-impaired waterbodies? ☑ Yes ☐ No

If yes, name of impaired water body/bodies and basis for listing as impaired: _____
Name - Pollutants - Uses:Fall Kill and tribs - Total Phosphorus

i. Is the project site in a designated Floodway? ☐ Yes ☑ No

j. Is the project site in the 100-year Floodplain? ☑ Yes ☐ No

k. Is the project site in the 500-year Floodplain? ☐ Yes ☑ No

l. Is the project site located over, or immediately adjoining, a primary, principal or sole source aquifer? ☐ Yes ☑ No
If Yes:

i. Name of aquifer: _____

m. Identify the predominant wildlife species that occupy or use the project site:
Common Dutchess County species

n. Does the project site contain a designated significant natural community? ☐ Yes ☑ No
If Yes:
i. Describe the habitat/community (composition, function, and basis for designation):
ii. Source(s) of description or evaluation:
iii. Extent of community/habitat:
- Currently: acres
- Following completion of project as proposed: acres
- Gain or loss (indicate + or -): acres

o. Does project site contain any species of plant or animal that is listed by the federal government or NYS as endangered or threatened, or does it contain any areas identified as habitat for an endangered or threatened species? ☑ Yes ☐ No
If Yes:
i. Species and listing (endangered or threatened):
Blanding's Turtle (NYSDEC) Indiana Bat (USFWS)

p. Does the project site contain any species of plant or animal that is listed by NYS as rare, or as a species of special concern? ☐ Yes ☑ No
If Yes:
i. Species and listing:

q. Is the project site or adjoining area currently used for hunting, trapping, fishing or shell fishing? ☐ Yes ☑ No
If yes, give a brief description of how the proposed action may affect that use:

E.3. Designated Public Resources On or Near Project Site

a. Is the project site, or any portion of it, located in a designated agricultural district certified pursuant to Agriculture and Markets Law, Article 25-AA, Section 303 and 304? ☐ Yes ☑ No
If Yes, provide county plus district name/number:

b. Are agricultural lands consisting of highly productive soils present? ☐ Yes ☑ No
i. If Yes: acreage(s) on project site?
ii. Source(s) of soil rating(s):

c. Does the project site contain all or part of, or is it substantially contiguous to, a registered National Natural Landmark? ☐ Yes ☑ No
If Yes:
i. Nature of the natural landmark: ☐ Biological Community ☐ Geological Feature
ii. Provide brief description of landmark, including values behind designation and approximate size/extent:

d. Is the project site located in or does it adjoin a state listed Critical Environmental Area? ☐ Yes ☑ No
If Yes:
i. CEA name:
ii. Basis for designation:
iii. Designating agency and date:

e. Does the project site contain, or is it substantially contiguous to, a building, archaeological site, or district which is listed on the National or State Register of Historic Places, or that has been determined by the Commissioner of the NYS Office of Parks, Recreation and Historic Preservation to be eligible for listing on the State Register of Historic Places? ☐ Yes ☑ No

If Yes: See Section 8 for details.

i. Nature of historic/archaeological resource: ☐ Archaeological Site ☐ Historic Building or District

ii. Name: _____

iii. Brief description of attributes on which listing is based:

_____

f. Is the project site, or any portion of it, located in or adjacent to an area designated as sensitive for archaeological sites on the NY State Historic Preservation Office (SHPO) archaeological site inventory? ☐ Yes ☑ No

g. Have additional archaeological or historic site(s) or resources been identified on the project site? ☐ Yes ☑ No

If Yes:

i. Describe possible resource(s): _____

ii. Basis for identification: _____

h. Is the project site within fives miles of any officially designated and publicly accessible federal, state, or local scenic or aesthetic resource? ☑ Yes ☐ No

If Yes:

i. Identify resource: (See Figure 9)

ii. Nature of, or basis for, designation (e.g., established highway overlook, state or local park, state historic trail or scenic byway, etc.): (See Figure 9)

iii. Distance between project and resource: (See Figure 9) miles.

i. Is the project site located within a designated river corridor under the Wild, Scenic and Recreational Rivers Program 6 NYCRR 666? ☐ Yes ☑ No

If Yes:

i. Identify the name of the river and its designation: _____

ii. Is the activity consistent with development restrictions contained in 6NYCRR Part 666? ☐ Yes ☐ No

F. Additional Information

Attach any additional information which may be needed to clarify your project.

If you have identified any adverse impacts which could be associated with your proposal, please describe those impacts plus any measures which you propose to avoid or minimize them.

G. Verification

I certify that the information provided is true to the best of my knowledge.

Applicant/Sponsor Name Maselo Realty, LLC (Simon Abikhzer) Date October 28, 2025

Signature Danielle Stark Danielle Stark, Agent for Applicant Title Planner / Project Manager, LaBella Associates

PRINT FORM

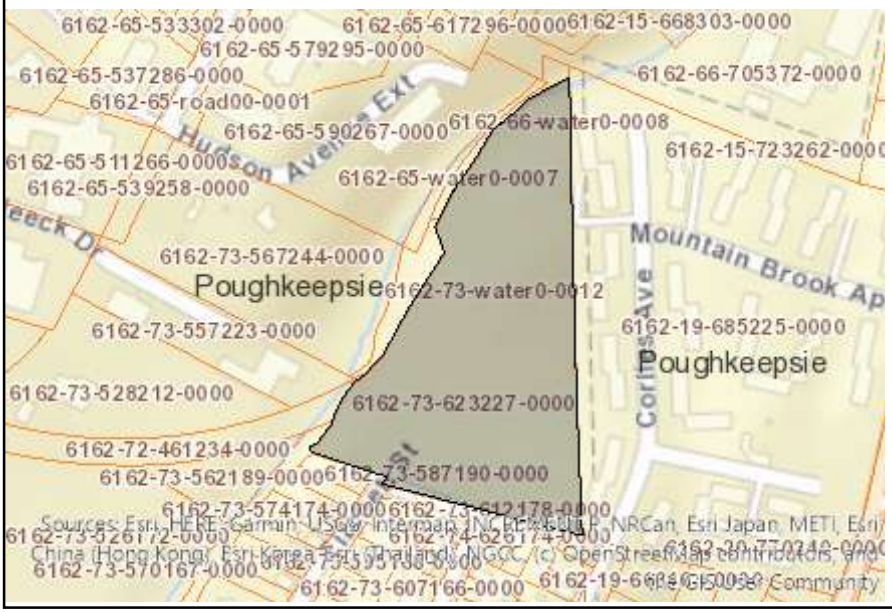

Disclaimer: The EAF Mapper is a screening tool intended to assist project sponsors and reviewing agencies in preparing an environmental assessment form (EAF). Not all questions asked in the EAF are answered by the EAF Mapper. Additional information on any EAF question can be obtained by consulting the EAF Workbooks. Although the EAF Mapper provides the most up-to-date digital data available to DEC, you may also need to contact local or other data sources to confirm data provided by the Mapper or to obtain data not provided by the Mapper.



B.i.i [Coastal or Waterfront Area]	No
B.i.ii [Local Waterfront Revitalization Area]	No
C.2.b. [Special Planning District]	Digital mapping data are not available or are incomplete. Refer to EAF Workbook.
E.1.h [DEC Spills or Remediation Site - Potential Contamination History]	Digital mapping data are not available or are incomplete. Refer to EAF Workbook.
E.1.h.i [DEC Spills or Remediation Site - Listed]	Digital mapping data are not available or are incomplete. Refer to EAF Workbook.
E.1.h.i [DEC Spills or Remediation Site - Environmental Site Remediation Database]	Digital mapping data are not available or are incomplete. Refer to EAF Workbook.
E.1.h.iii [Within 2,000' of DEC Remediation Site]	Yes
E.1.h.iii [Within 2,000' of DEC Remediation Site - DEC ID]	314136
E.2.g [Unique Geologic Features]	No
E.2.h.i [Surface Water Features]	Yes - Digital mapping information on local, New York State, and federal wetlands and waterbodies is known to be incomplete. Refer to the EAF Workbook.
E.2.h.ii [Surface Water Features]	Yes - Digital mapping information on local, New York State, and federal wetlands and waterbodies is known to be incomplete. Refer to the EAF Workbook.
E.2.h.iii [Surface Water Features]	Yes - Digital mapping information on local, New York State, and federal wetlands and waterbodies is known to be incomplete. Refer to the EAF Workbook.
E.2.h.iv [Surface Water Features - Stream Name]	862-393
E.2.h.iv [Surface Water Features - Stream Classification]	C

E.2.h.iv [Surface Water Features - Wetlands Name]	Federal Waters
E.2.h.v [Impaired Water Bodies]	Yes
E.2.h.v [Impaired Water Bodies - Name and Basis for Listing]	Name - Pollutants - Uses:Fall Kill and tribs - Total Phosphorus
E.2.i. [Floodway]	No
E.2.j. [100 Year Floodplain]	Yes
E.2.k. [500 Year Floodplain]	No
E.2.l. [Aquifers]	No
E.2.n. [Natural Communities]	No
E.2.o. [Endangered or Threatened Species]	Yes
E.2.o. [Endangered or Threatened Species - Name]	Blanding's Turtle
E.2.p. [Rare Plants or Animals]	No
E.3.a. [Agricultural District]	No
E.3.c. [National Natural Landmark]	No
E.3.d [Critical Environmental Area]	No
E.3.e. [National or State Register of Historic Places or State Eligible Sites]	Digital mapping data are not available or are incomplete. Refer to EAF Workbook.
E.3.f. [Archeological Sites]	No
E.3.i. [Designated River Corridor]	No

FIGURES

Figure 1: USGS Location Map

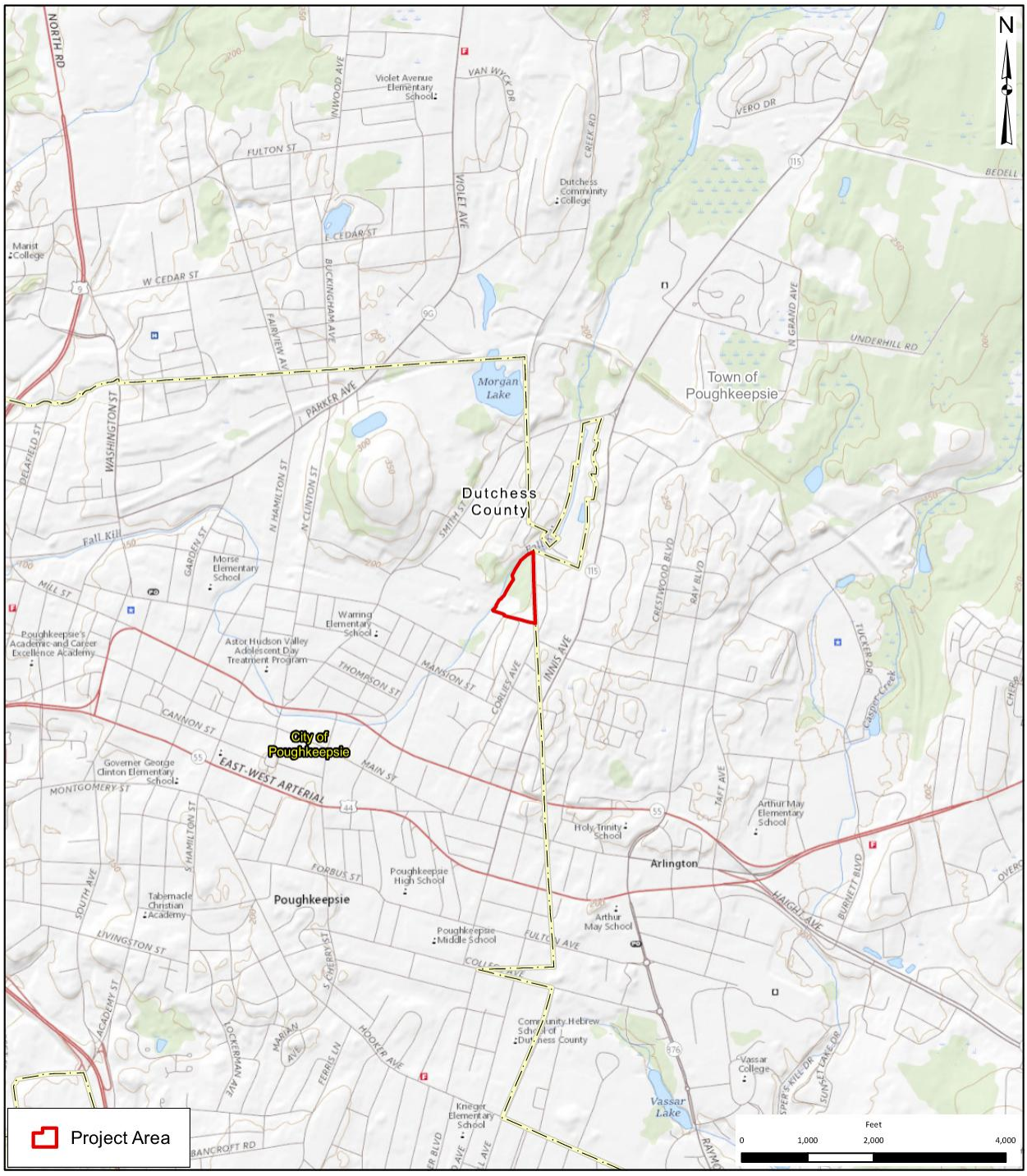

Figure 2: Orthophoto Tax Map



Figure 3: Land Use Map

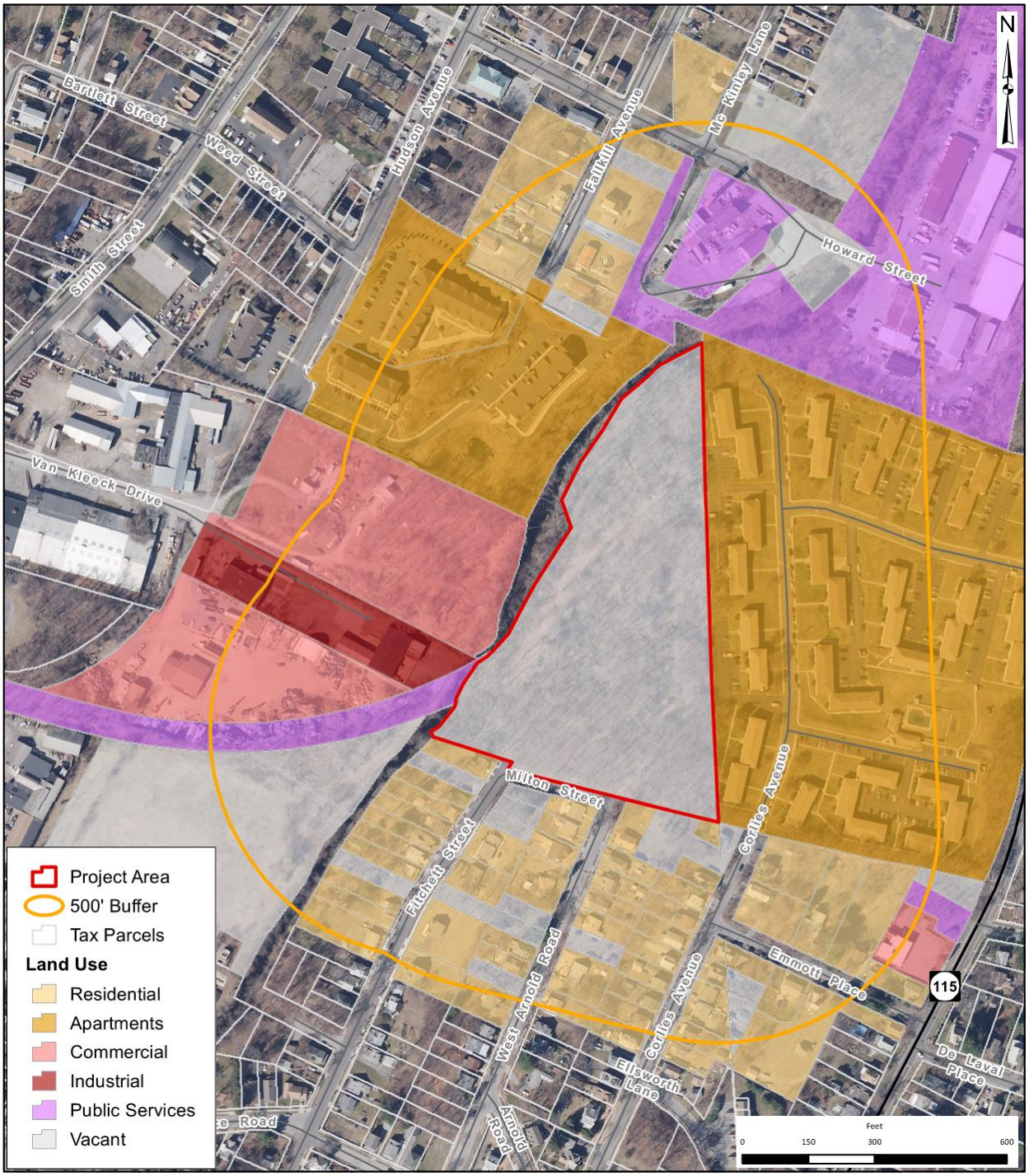

Figure 4: Zoning Map, Existing and Proposed

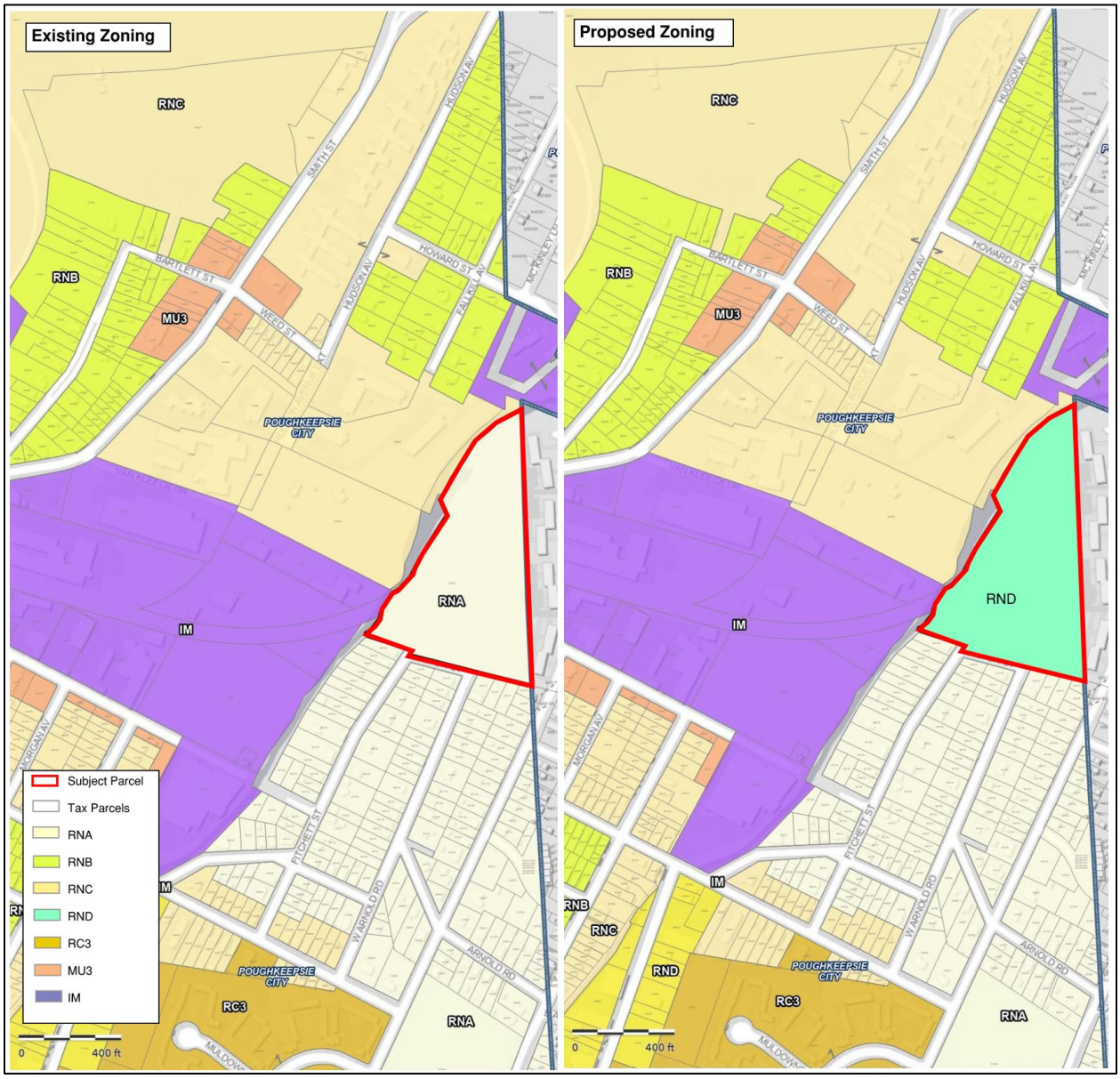

Figure 5: Soil Map



Figure 6: Wetland, Stream and Floodplain Map

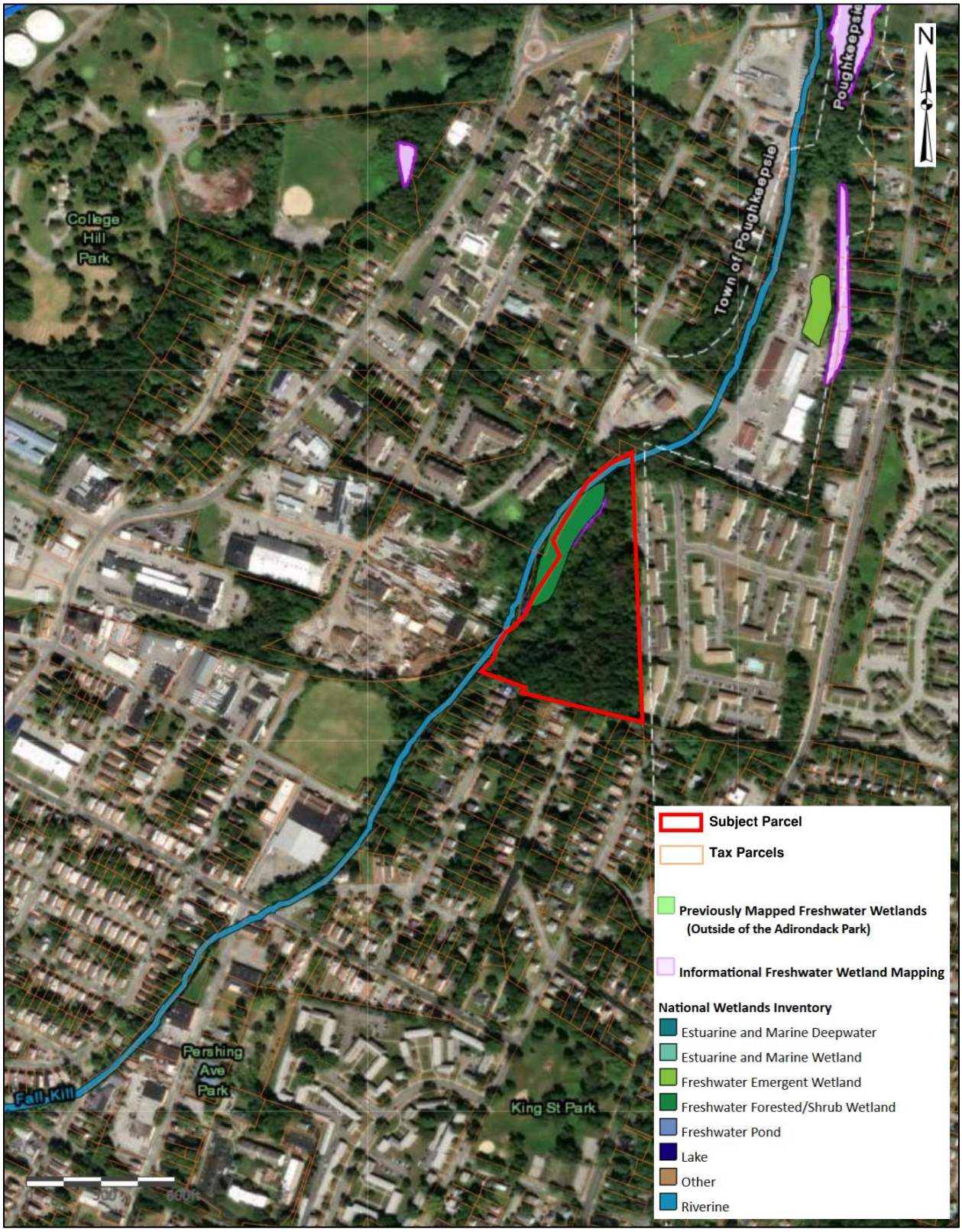

Figure 7: NYSDEC Environmental Resource Map

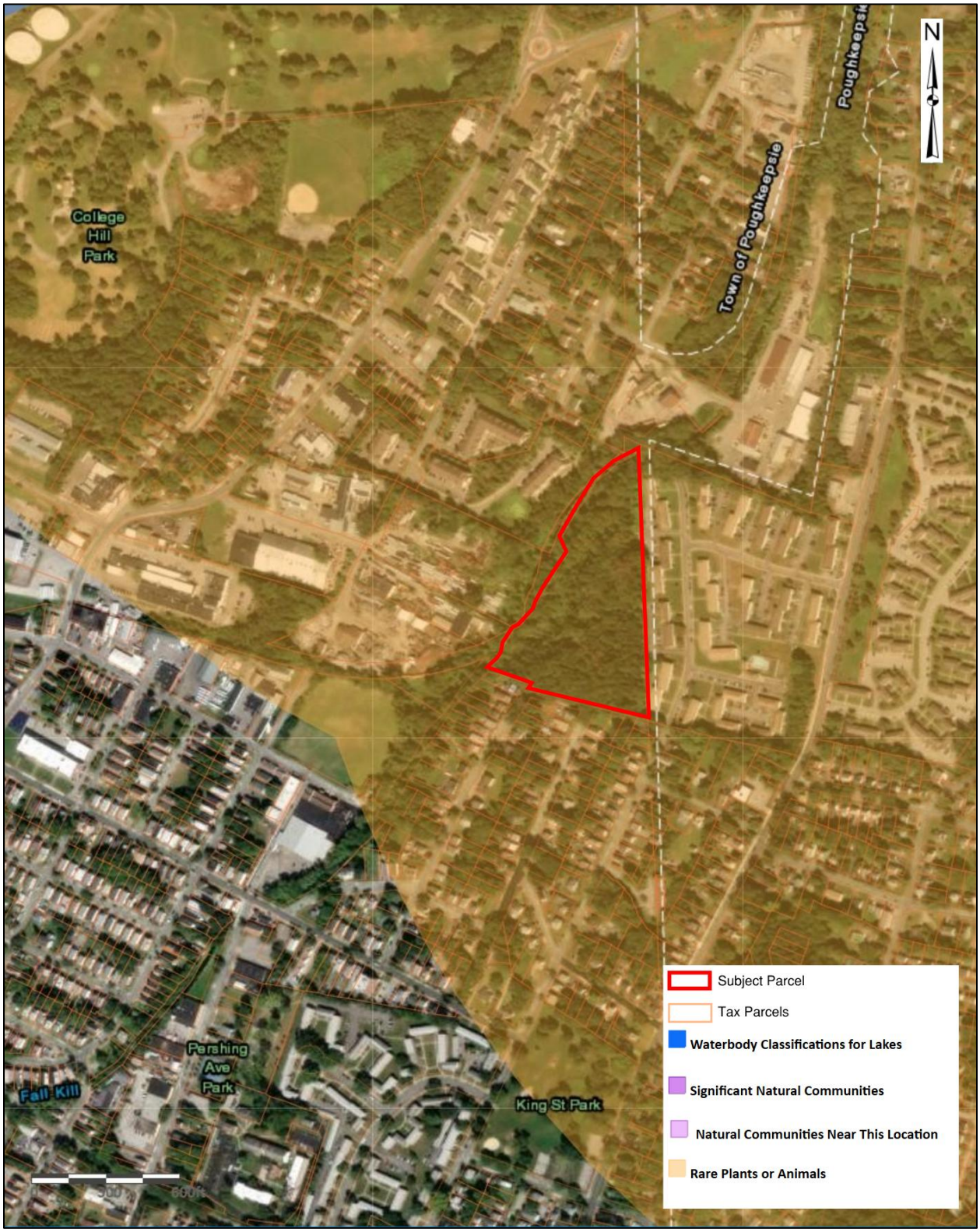

Figure 8: NYSOPRHP Cultural Resource Information System (CRIS) Map

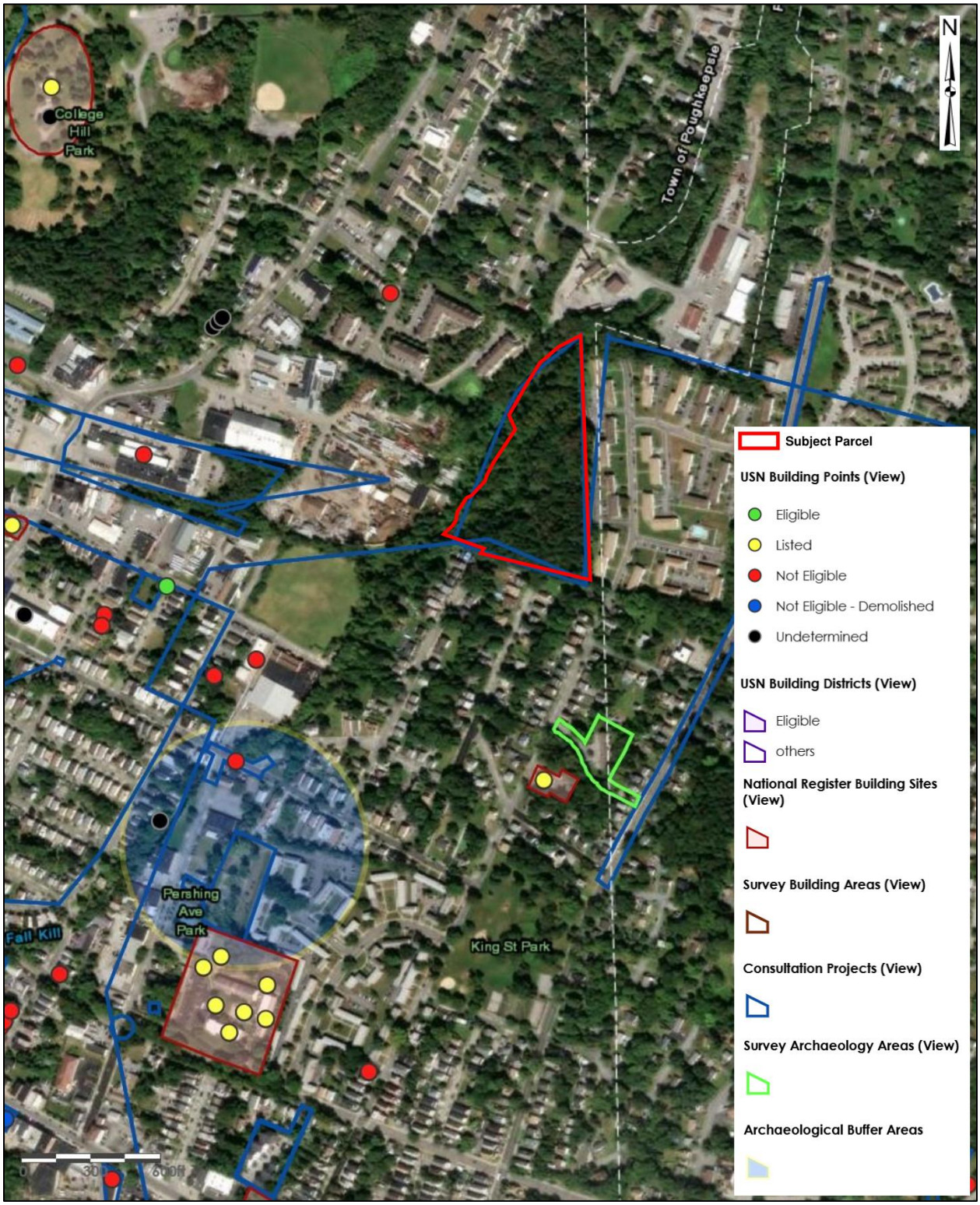

Figure 9: Map of Publicly Accessible Federal, State, or Local Scenic of Aesthetic Resources

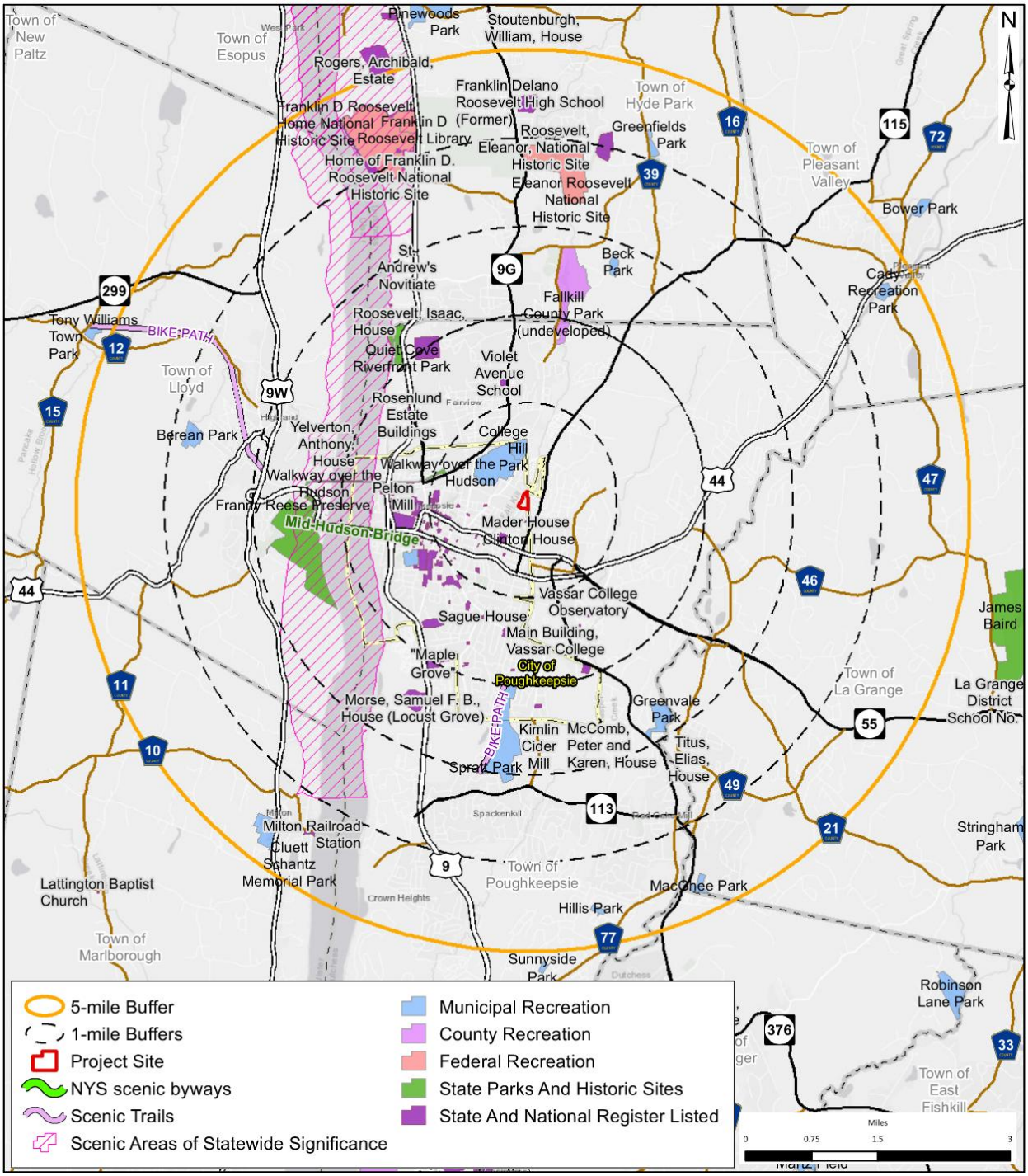

ATTACHMENT A
Councilwoman Flowers Letter of Support

THE CITY OF POUGHKEEPSIE
NEW YORK

August 10, 2020

Ms. Natalie Quinn, Planning Director
City of Poughkeepsie
62 Civic Center Plaza
Poughkeepsie, New York 12601

Re: Highview II: Proposed 64-Unit Residential Development (Maselo Realty LLC)
Milton Street (Tax Parcel 131300-6162-73-623227), City of Poughkeepsie

Dear Ms. Quinn:

I am writing to provide my support for Maselo Realty, LLC's application for a proposed rezoning of the Milton Street property to a Planned Residential Development (PRD) Zoning District to facilitate the construction of a 64-apartment unit clustered multifamily development within two buildings off Milton Street.

The Applicant, represented by Simon and Nate Abikzer, have undertaken community outreach for this project which involved two community meetings that I hosted. One meeting was held at City Hall, Common Council Chambers in which you attended and the other meeting was held at 505 Main Street, Public Safety Bldg. Renderings of the proposed project were shared with the residents who live near the proposed project and many of them asked questions about the project and voiced their concerns.

The meetings were well advertised. I hand delivered flyers to all the residents on Corlies Ave, W. Arnold Road, Fitchett Street and Lawrence Road, explaining the proposed project and inviting them to the meetings. I also sent text messages and call residents who I had contact info, reminding them of the meeting so due diligence was made to inform all residents of the project. Residents of the area who were able to attend were very vocal of what they wanted and not want to see. The exchange of ideas resulted in the current site plan design. The applicant assured the residents that they will be "good neighbors" and ensure that the two buildings will have minimum visibility so it will not infringe on the existing neighborhood.

Based on the fact that the project will be no more than 64 units, the feedback from the residents who attended the meetings and the applicant's genuine efforts in addressing the concerns of the residents in the immediate area, I am in support of the proposed rezoning of the Milton Street property and construction of the 64 apartment unit.

Please feel free to contact me to discuss further if needed.

Thank you

Sincerely,

Councilperson Yvonne Flowers
5th Ward, City of Poughkeepsie
(845) 505-2735/email: yflowers@cityofpoughkeepsie.com

ATTACHMENT B
Natural Resource Information

Poughkeepsie Natural Resource Inventory
Conservation Analysis
Highview at the Fallkill Creek
Milton Street
City of Poughkeepsie
Dutchess County, New York



October 28, 2025

Prepared for:
Maselo Realty, LLC
18 Eastview Road
Monsey, NY, 10952

Prepared by:
LaBella Associates
21 Fox Street Suite 201
Poughkeepsie, NY 12601
845-454-3980

Project No. 81947.00

TABLE OF CONTENTS

1.0 INTRODUCTION 1
1.1 Project Summary 1
1.2 Background 1
1.3 Site Description and Project Details 2
1.4 Anticipated Permits/Approvals 2
2.0 CONSERVATION ANALYSIS 3
2.1 Geology and Soils 3
2.2 Water Resources 5
2.3 Habitats 6
2.4 Land Use 7
2.5 Historic Resources 7
2.6 Recreational Resources 8
2.7 Conclusion 8

LIST OF TABLES

Table 1: Anticipated Approvals/Permits 3
Table 2: Characteristics of Soil Types within Project Area 4

FIGURES

Figure 1: Geology and Soils
Figure 2: Water Resources
Figure 3: Habitats
Figure 4: NYSDEC Environmental Resource Map
Figure 5: Land Use Map
Figure 6: NYSOPRHP Cultural Resources Information System Map
Figure 7: Historic Resources
Figure 8: Recreational Resources

ATTACHMENTS

Attachment A: US Fish & Wildlife Service (USFWS) Official Species List

Note: Concept Plan submitted separately.

1.0 INTRODUCTION

1.1 Project Summary

The Applicant and Owner, Maselo Realty, LLC, is proposing the rezoning of an 8.713-acre tax parcel on Milton Street in the City of Poughkeepsie from Residential Neighborhood A (RNA) to Residential Neighborhood D (RND) for the construction of a 63-apartment unit clustered multifamily development within two buildings with one access off Milton Street. The parcel is identified as parcel number 131300-6162-73-623227 on the City of Poughkeepsie Tax Map. The Town of Poughkeepsie abuts the eastern edge of the property (see Figures 1 and 2).

The parcel is currently undeveloped and zoned for Residential Neighborhood A (RNA) within which multifamily (i.e. 5+ unit) residential development is not permitted. Therefore, to facilitate the proposed project, the Applicant is petitioning the City for a rezoning of the property from RNA to RND by the Common Council. Upon completion of the rezoning, the Applicant will seek site plan approval from the Planning Board.

1.2 Background

On April 25, 2006, the City of Poughkeepsie Planning Board granted site plan approval for the construction of a 120-unit condominium complex to be known as Highview at the Fallkill Creek, located on the north side of Milton Street. The Applicant was Phoenix Capital Partners, LLC. The parcel was zoned as Medium High-Density Residential (R-4) at that time, which would have permitted a maximum of 140 dwelling units based on the R-4 requirements and lot size. The original project was never undertaken, and site plan approvals lapsed. The site was subsequently rezoned to Medium Low-Density Residence District (R-2) in October 2010.

When the Applicant decided to pursue the project again in 2019, the parcel was zoned for Medium Low-Density Residential (R-2) within which multifamily development was not permitted. Therefore, to facilitate the proposed project, the Applicant petitioned the City for a rezoning of the property from R-2 to PRD by the Common Council. The Planning Board as lead agency determined that the action was an unlisted action and upon examination of the Full Environmental Assessment Form (FEAF) and 6 N.Y.C.R.R Section 617.7 of the State Environmental Quality Review Act (SEQRA), adopted a negative declaration on January 20, 2021. The rezoning approval was granted by the Common Council on February 16, 2021 (Common Council Ordinance 0-21-01).

The Common Council and City's Mayor approved the amendment to the Zoning Map on February 18, 2021. On May 25, 2021, the owner filed an application for site plan approval from the Planning Board for the project under the PRD regulations. After filing an area variance application to the Zoning Board of Appeals on June 6, 2021, the Applicant received approval for three area variances on September 14, 2021 to enable the proposed development.

Since then, the application has been on numerous agendas of the Planning Board and multiple extensions have been granted for the rezoning petitions. In addition to Planning Board meetings, the project

underwent two community meetings in 2019 and has received support from Councilwoman Flowers, see Attachment A for a letter of support.

On September 6, 2024, a Municipal Consent to Form a Sewage-Works Corporation was approved by the Common Council and the Mayor. On November 4, 2024 the property was rezoned to RNA as part of the Common Council's adoption of the City of Poughkeepsie Zoning Ordinance, along with entire neighborhood of primarily single-family dwellings to the north (which provides the only access to the property).

Accordingly, the Applicant seeks a rezoning to the RND Zoning District to permit the proposed the 63-unit development. The project remains as proposed previously, with no changes to unit count or access.

1.3 Site Description and Project Details

The project parcel is located in the northeast quadrant of the city, along the city/town border, with access to the site on Milton Street by way of Fitchett Street and West Arnold Road. The project site consists of vacant wooded land. Fallkill Creek runs along the western property line and within the property for approximately 200 linear feet. The development proposal, referenced as Highview at the Fallkill Creek – Milton Street, includes 63 multifamily dwelling units clustered within two buildings in the southeast portion of the project parcel. The unit breakdown is anticipated to include approximately 31 one-bedroom and 32 two-bedroom units.

The development will be located away from Milton Street (approximately 209 feet) with a substantial natural buffer. The finished floor of the southern building's (Building 100 on Sheet C130) ground floor will be approximately 18 ft lower than Milton Street. The development will not directly impact wetlands or the Fallkill Creek and is approximately 128.5 – 145.7 feet away from the Creek. The development will occupy approximately 60% of the 8.713-acre property allowing for approximately 40% of the site to remain undisturbed including 373 trees or approximately 67.5% of trees currently found on the site.

1.4 Anticipated Permits/Approvals

Table 1 provides a list of the approvals/permits that are anticipated for the project.

Table 1: Anticipated Approvals/Permits

AGENCY	APPROVAL/PERMIT
City of Poughkeepsie Common Council	Rezoning from RNA to RND
City of Poughkeepsie Planning Board	Site plan approval
City of Poughkeepsie – Engineering Department	Curb cut approval
City of Poughkeepsie – Zoning Administrator	Floodplain development permit
Dutchess County Department of Planning and Development	GML 239m referral
Dutchess County Department of Health	Water and Sewer Connections
NYS Department of Environmental Conservation (NYSDEC)*	GP-0-25-001 SPDES General Permit for Discharges during Construction Activities; Article 24 Adjacent Area for grading (pending)

*An Article 15 permit from NYSDEC was identified in the SEQR FEAF Part 1 form dated 12/3/2019 in case disturbance within the bank was required as part of the project (not currently anticipated to occur). However, the FallKill is not a Trout Stream; therefore, as a Class C stream with no "t" or "ts" standard it is not regulated by the NYSDEC under Article 15. Therefore, this permit is not required and is not identified here.

2.0 CONSERVATION ANALYSIS

The Fall Kill is identified in the *Natural Resources Inventory for the City of Poughkeepsie* (referred to herein as the NRI Report) as a natural resource that supports or contributes to beautification, habitat, flood control, history, recreation and climate resilience. The project site is discussed throughout the document as a parcel, "that is undeveloped and contains streamside forests and wetlands within the floodplain. Due to the lack of channelization, this area floods readily without harming buildings or roads. It is an important flood mitigation area as it is the only segment of the creek in the City of Poughkeepsie where flooding can naturally occur."[1] The Applicant recognizes the unique character and benefits provided by his property and is working to develop a plan that is sensitive to these attributes while also providing new housing opportunities.

2.1 Geology and Soils

According to the NRI Report, the project site's bedrock geology is Graywacke and shale, which is considered less permeable than other types of bedrock found in the City of Poughkeepsie. The surficial geology of the site features bedrock outcrops. These rock outcrop areas are shown on the concept plan.

Figure 1 shows the soil types that are expected to be present on the project site, and Table 2 provides characteristics of these soil types, according to the Dutchess County Soil Survey information available in GIS and the Natural Resource Conservation Service website.

[1] The Environmental Cooperative at Vassar Barns. *Natural Resources Inventory for the City of Poughkeepsie*. 2019. Page 10.

Table 2: Characteristics of Soil Types within Project Area

% of SITE	SOIL SYMBOL	SOIL TYPE	SLOPES	DRAINAGE	DEPTH TO WATER TABLE (FEET)	DEPTH TO BEDROCK (INCHES)
	DwC	Dutchess-Cardigan complex, rolling, rocky	5 to 16%	well	>6	
		Dutchess (40%)		well	>6	>60
		Cardigan (30%)		well	>6	20 to 40
	DxC	Dutchess-Cardigan-Urban Land complex, rolling, rocky	5 to 16%			
		Dutchess (25%)		well	>6	>60
		Cardigan (25%)		well	>6	20 to 40
		Urban Land (25%)		well	>2	>10
	Ud	Udorthents, smoothed	mostly 0 to 8% but 8 to 25% on sides of excavations & along highways	somewhat excessively to moderately well	>3.0 Nov-Jun	>60

Most of the site contains the Dutchess-Cardigan complex, rolling, rocky soil series (DwC). An area of the Dutchess-Cardigan-Urban Land complex soil series (DxC) exists along Milton Street, and an area of Udorthents soil series (Ud) exists in the southwest corner of the project parcel. The Dutchess soils and the Cardigan soils are well drained soils. The Udorthents soil series is a somewhat excessively to moderately well drained soil. Urban Land is described as areas covered by buildings, streets, parking lots and other impervious surfaces, which obscure soil identification, so that the actual identification of the soil is not determined for some portions of the site. The Dutchess soil series, the Cardigan soil series, and the Udorthents soil series all have a depth to water table of greater than 6 feet. Urban Land is described as areas covered by buildings, streets, parking lots and other impervious surfaces which obscure soil identification, so that the actual identification of the soil is not determined for some portions of the site. Therefore, the depth to water table for these areas is unknown, and is assumed to be greater than 2 feet according to the Soil Survey.

According to a geotechnical engineering report by the Chazen Companies for the previously approved site plan, groundwater was encountered in only one of eight borings.[2] These borings ranged in depth from 5.5 feet to 15.8 feet due to refusal at bedrock, with the exception of the northernmost boring in which refusal occurred at 2.5 feet. Thus, groundwater was generally deeper than 5.5 feet throughout most of the site. The report states that, "groundwater seepage into open excavations is not anticipated at this time, but that the contractor should be prepared to lower the groundwater table two feet below the base of

[2] *Geotechnical Engineering Report*, The Chazen Companies, September 14, 2005.

excavations to provide a stable subgrade for construction activities and to maintain the integrity of the natural bearing soils."

If water is encountered above three feet below the surface, footings and footing drains will be designed in accordance with accepted construction practices to alleviate any problems associated with a high water table. With this practice, no significant impacts due to the presence of water above three feet below the surface are anticipated.

Rock encountered during the construction of the proposed residential development will be removed by mechanical methods (ripping), when possible. If blasting is determined to be necessary, all blasting operations will adhere to New York State and local ordinances governing the use of explosives. Proper program guidelines will be established between New York State, the City of Poughkeepsie and the blasting contractor prior to undertaking this activity. If blasting is required, it will be performed in accordance with New York State Department of Transportation (NYSDOT) Geotechnical Engineering Manual #22 "Procedures for Blasting" latest edition.

2.2 Water Resources

As shown in Figure 2, the project site abuts and includes some portions (approximately 200 linear feet) of the Fall Kill, a perennial stream. In addition, the project site includes wetland, riparian and flood hazard areas (or 100-year floodplain area). The Fall Kill watershed covers 19.5 square miles, including portions of the City of Poughkeepsie. The Fall Kill is approximately 38 miles long, and where it travels through the City it has been channelized and is contained by stone walls before it charges into the Hudson River. The Fallkill has been found to contain various chemicals and bacteria, with deterioration being most prevalent within the City.

The site features approximately 0.788 acres of wetland area (freshwater forested/shrub wetland (PFO1E)), which is regulated by the United States Army Corps of Engineers (USACE). No New York State Department of Environmental Conservation (NYSDEC) regulated wetlands are located on the site. The Fall Kill is classified as a Class C stream by the NYSDEC, which is not regulated. It is anticipated that the proposed site design will not result in impacts to wetlands or to the Fall Kill and no wetland or stream-related permits are being sought from the USACE or NYSDEC.

According to the NRI Report, "Riparian buffers are vegetated areas alongside the creek that help to protect the creek by slowing runoff, infiltrating water, providing shade that cools the water, and reducing the amount of sediment and pollutants entering the stream."[3] Theses areas can provide nesting or foraging habitat for many species of birds. The concept plan has been designed to avoid the riparian buffer areas and concentrates development upland within the site.

The property is identified in the NRI Report as one of the last remaining areas within the City of Poughkeepsie where the Fall Kill is not channelized and is permitted to flood naturally. This section of the Fall Kill is identified as a significant habitat area that provides important flood retention due to the undeveloped forested riparian buffer. The NRI Report explains that during flood events the Fall Kill may overflow into these wetlands, which are located within the flood hazard area or 100-year floodplain.

[3] The Environmental Cooperative at Vassar Barns. *Natural Resources Inventory for the City of Poughkeepsie*. 2019. Page 47.

According to the NRI Report, "flooding helps to slow down water, recharge groundwater and increase water quality by letting particulates settle out instead of being carried downstream."[4] According to FEMA Community Panel Number 36027C0358E information (effective 5/12/2012) available through GIS (Figure 6), an area abutting the Fallkill Creek is located within Zone AE (100-year floodplain) or special flood hazard area. The floodplain area is identified on the concept plan. Some work (e.g. grading) is anticipated to occur within the 100-year floodplain; therefore, a floodplain development permit will be sought from the City.

The proposed development is located upland from the stream, wetland, riparian and floodplain areas with the intention of retaining these important resources. With the exception of a floodplain development permit for grading in the floodplain, no permits affecting aquatic resources are anticipated at this time. The proposed project will require greater than one acre of disturbance and will require coverage under the State Pollutant Discharge Elimination System (SPDES) General Permit for Stormwater Discharges from Construction Activity. A Stormwater Pollution Prevention Plan will be prepared in conformance with the most current New York State Stormwater Management Design Manual and New York State Standards and Specifications for Erosion and Sediment Control.

2.3 Habitats

According to the NRI Report, the project site is home to several habitats, including upland shrubland, upland hardwood forest, upland mixed forest and hardwood swamp in addition to wetland and stream areas (Figure 3). Table 2 presents a brief description of these habitats based on information found in the report.

Table 2: Habitat Types on the Project Site

Specific Habitat Type	Brief Description
Upland Shrubland	Open (nonforested) area with shrubs making up >20% of ground cover
Upland Hardwood Forest	Non-wetland forest dominated by hardwood trees (conifers make up 25% of canopy)
Upland Mixed Forest	Non-wetland forest with a mix of hardwoods and conifers (conifers make up 25-75% of canopy)
Hardwood Swamp	Wetland (identified by predominance of hydrophytic vegetation) dominated by trees and/or shrubs

According to the NRI Report, "the Fall Kill is highly impacted by channelization and pollution, nonetheless it continues to serve as an important habitat for migratory fish species such as the American eel and river herring." The Upland Hardwood Forest, which currently dominates the site, is described as a habitat that is also important for cooling derived from shade, carbon sequestration, reducing stormwater runoff, and improvement of air quality. According to the NYSDEC Environmental Resource Map (Figure 4), there are known occurrences of the Blanding's Turtle (State listed threatened species) on or in the vicinity of the project site. An analysis to assess potential adverse impacts to Blandings Turtle was completed and

[4] The Environmental Cooperative at Vassar Barns. *Natural Resources Inventory for the City of Poughkeepsie*. 2019. Page 46.

received sign off from the NYSDEC. This information has been submitted separately. There is no NYSDEC Significant Natural Community identified on the project site. According to the US Fish & Wildlife Service (USFWS) Official Species List (Attachment A), there is potential for the Indiana Bat (endangered), Northern Long-eared Bat, and Tricolored Bat on or in the vicinity of the project site. It is anticipated that tree clearing will occur between November 1st and March 31st to avoid direct or indirect take of the bat species, as during this time, the bats would be hibernating and not present onsite.

The Fall Kill is identified as a conservation priority in the NRI Report because it, "provides streamside habitats, helps to reduce and filter surface runoff, provides shading vegetation, and provides organic material that supports the food web and habitat structure of the stream."[5] Based on this rationale a priority conservation zone of 160 feet from the stream edge is recommended to increase habitat area and improve in-stream conditions.

The project site is identified in Map 4.4, "Habitat Envelopes and Potential Corridors" within the NRI Report as a Significant Habitat Area. The Report states that, "if new development in these areas cannot be avoided, it should be concentrated near the edges and near existing roads and other development so that as much habitat area as possible is preserved without fragmentation."[6]

As explained in earlier sections, a large buffer (131 feet) and distance (146 – 160 feet away) will separate the Fall Kill Creek from the proposed development. Based on the information provided above, no significant adverse impacts will occur to vegetation and wildlife. This information will be provided to NYSDEC.

2.4 Land Use

The parcel is currently undeveloped and zoned for Residential Neighborhood A (RNA). To the north and west, the property is abutted by Residential Neighborhood C (RNC) and Industrial Mixed (IM) zoning districts, which house a range of uses including multi-family housing (Highridge Garden Apartments), a junkyard, the City's Department of Public Works complex, and manufacturing uses. The southern portion of the lot abuts more RNA district properties, comprised primarily of single-family residences (Figure 5). To the east, in the Town of Poughkeepsie, the property is abutted by a parcel zoned for Multifamily Residence (Town of Poughkeepsie) which contains a large apartment complex, Mountain Brook Apartments.

The proposed residential project is not industrial or commercial and is not likely to result in a source of pollution that could endanger the Fall Kill.

2.5 Historic Resources

According to the NYS Office of Parks, Recreation, and Historic Preservation (NYSOPRHP) Cultural Resource Information System (CRIS) mapping (Figure 6), the project site does not contain and is not adjacent to any National or State Historic Register sites or any sites that were determined to be eligible for listing on the

[5] The Environmental Cooperative at Vassar Barns. *Natural Resources Inventory for the City of Poughkeepsie*. 2019. Page 73.
[6] The Environmental Cooperative at Vassar Barns. *Natural Resources Inventory for the City of Poughkeepsie*. 2019. Page 221 or page 85 of Appendix A.

National or State Historic Register. The CRIS mapping indicates that the project site is partially located within a known archeologically sensitive area. The Applicant received a Letter of No Effect from the NYSOPRHP State Historic Preservation Office on December 17, 2020.

The NRI Report does not identify any historic resources on or adjacent to the project site, see Figure 7.

2.6 Recreational Resources

The project site is located on privately-owned land that is not currently used by the public for recreation, see Figure 8. The site would be developed with two residential apartment buildings. Residents would likely use King Street Park located approximately 1/2 mile south of the site. This park features a playground, baseball diamond, tennis court, basketball court and a flower garden.

2.7 Conclusion

The property is identified in the NRI Report as one of the last remaining areas within the City of Poughkeepsie where the Fall Kill is not channeled and is permitted to flood naturally. Approximately one-third of the property falls within the City's flood area boundary and contains both upland hardwood forest and upland shrubland habitat. These characteristics make the site ideally suited to the clustering of development away from the creek, which will retain existing habitat.

The Applicant is proposing construction of a 63-unit clustered multifamily apartment development within two buildings with access off Milton Street on an approximately 8.713-acre property. Due to the clustered nature of the site design under the proposed RND regulations approximately 40 percent of the existing forested area will be retained on site. In contrast, the strict application of the RNA zoning for the provision of single-family homes, whether a clustered or conventional subdivision, would result in greater ground disturbance and loss of natural habitat.

FIGURES

Page left intentionally blank

Figure 1

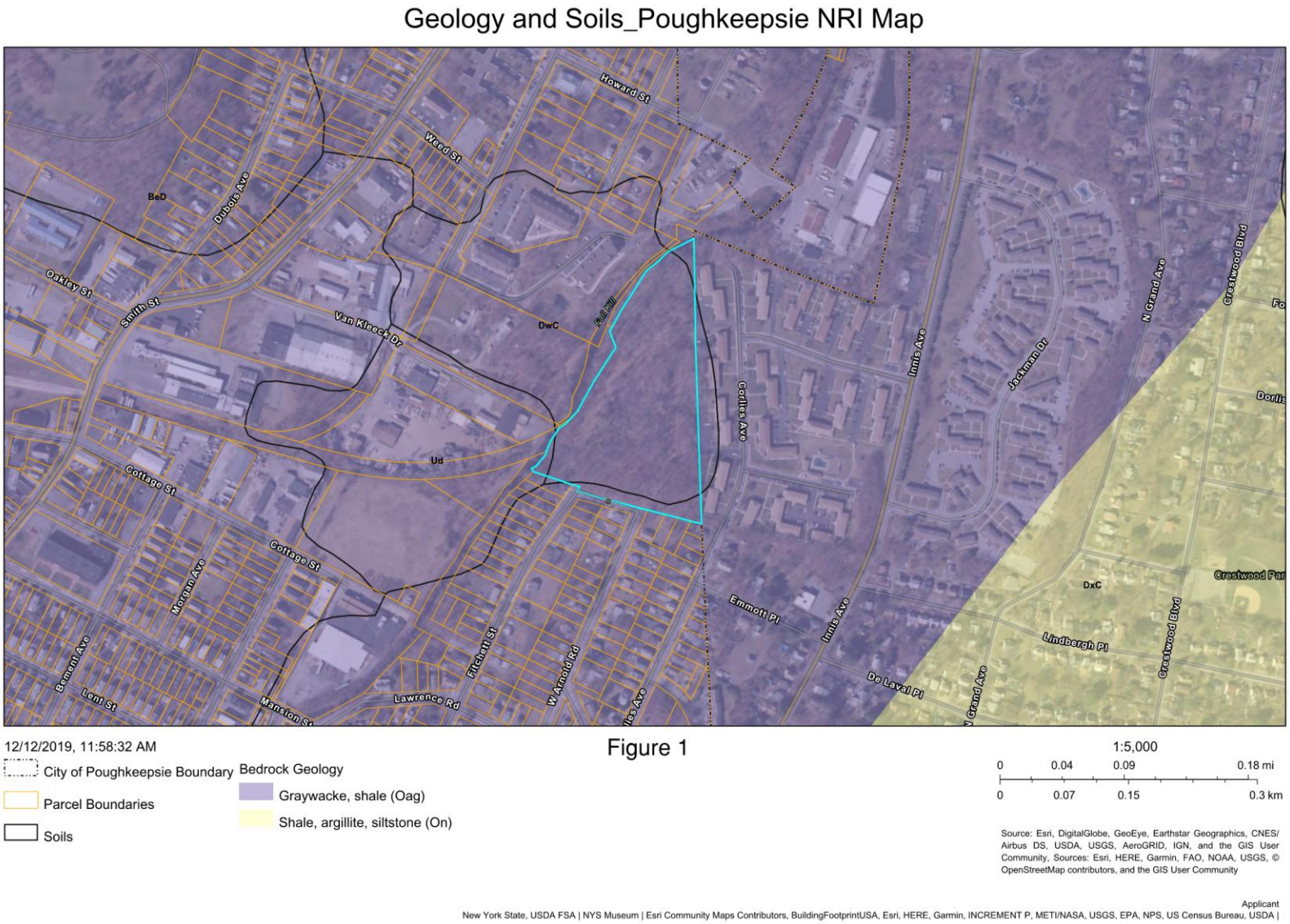
Geology and Soils_Poughkeepsie NRI Map
Howard St
Weed St
BeD
Dubois Ave
Oakley St
Smith St
Van Kleeck Dr
DwC
Full Mill
Corlies Ave
Innis Ave
Jackman Dr
N Grand Ave
Crestwood Blvd
Ud
Cottage St
Morgan Ave
Bement Ave
Lent St
Mansion St
Lawrence Rd
Fitchett St
W Arnold Rd
Ilas Ave
Emmott Pl
DxC
Lindbergh Pl
De Laval Pl
12/12/2019, 11:58:32 AM
City of Poughkeepsie Boundary
Parcel Boundaries
Soils
Bedrock Geology
Graywacke, shale (Oag)
Shale, argillite, siltstone (On)
Figure 1
1:5,000
0 0.04 0.09 0.18 mi
0 0.07 0.15 0.3 km
Source: Esri, DigitalGlobe, GeoEye, Earthstar Geographics, CNES/ Airbus DS, USDA, USGS, AeroGRID, IGN, and the GIS User Community, Sources: Esri, HERE, Garmin, FAO, NOAA, USGS, © OpenStreetMap contributors, and the GIS User Community
Applicant
New York State, USDA FSA | NYS Museum | Esri Community Maps Contributors, BuildingFootprintUSA, Esri, HERE, Garmin, INCREMENT P, METI/NASA, USGS, EPA, NPS, US Census Bureau, USDA |

Figure 2

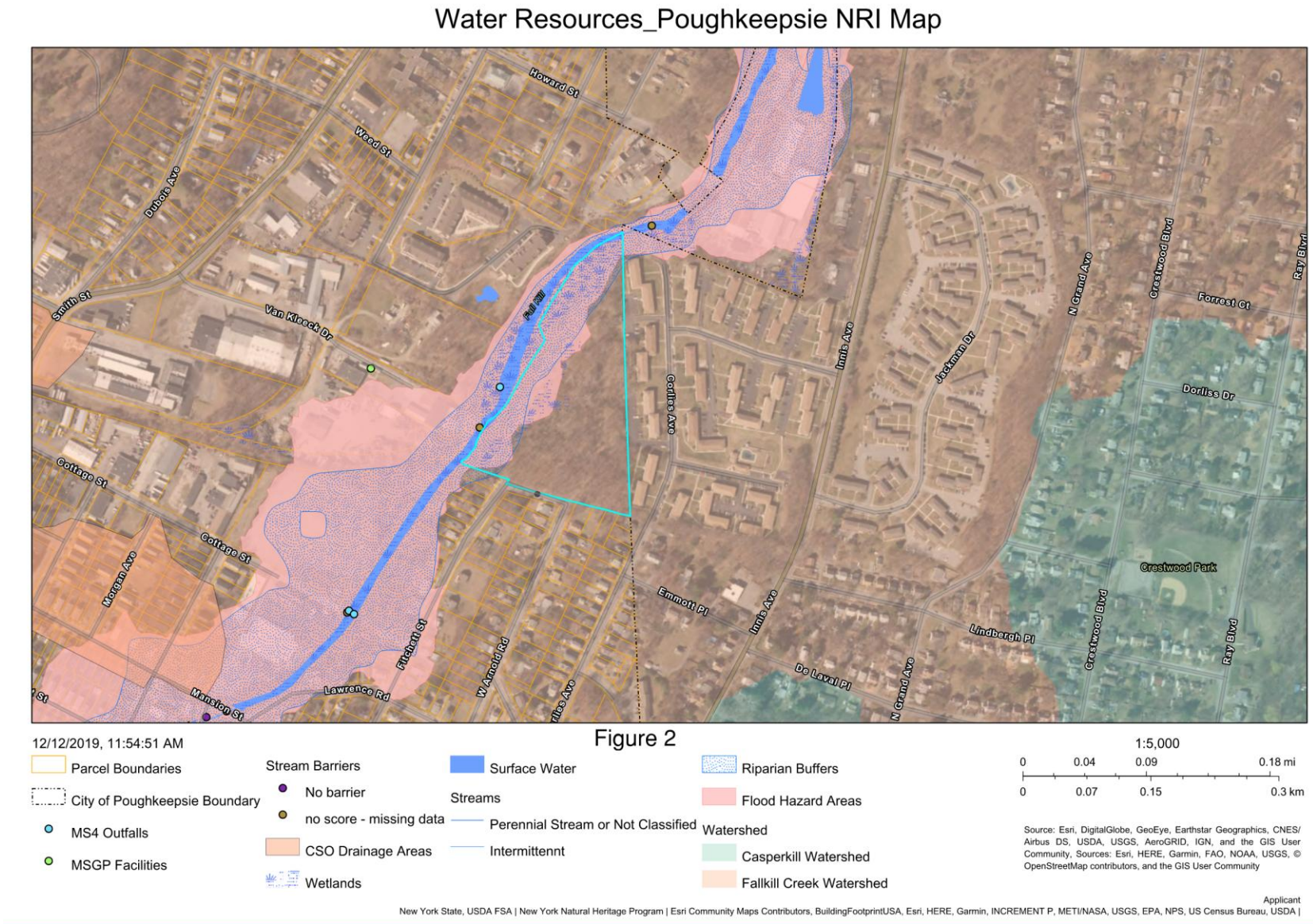
Water Resources_Poughkeepsie NRI Map
Howard St
Weed St
Dubois Ave
Smith St
Van Kleeck Dr
Fall Kill
Cottage St
Morgan Ave
Fitchett St
W Arnold Rd
Lawrence Rd
Mansion St
Coolies Ave
Innis Ave
Jackmin Dr
N Grand Ave
Crestwood Blvd
Forrest Ct
Ray Blvd
Dorliss Dr
Crestwood Park
Emmott Pl
Lindbergh Pl
De Laval Pl
Figure 2
12/12/2019, 11:54:51 AM
Parcel Boundaries
City of Poughkeepsie Boundary
MS4 Outfalls
MSGP Facilities
Stream Barriers
No barrier
no score - missing data
CSO Drainage Areas
Wetlands
Surface Water
Streams
Perennial Stream or Not Classified
Intermittennt
Riparian Buffers
Flood Hazard Areas
Watershed
Casperkill Watershed
Fallkill Creek Watershed
1:5,000
0 0.04 0.09 0.18 mi
0 0.07 0.15 0.3 km
Source: Esri, DigitalGlobe, GeoEye, Earthstar Geographics, CNES/ Airbus DS, USDA, USGS, AeroGRID, IGN, and the GIS User Community, Sources: Esri, HERE, Garmin, FAO, NOAA, USGS, © OpenStreetMap contributors, and the GIS User Community
Applicant
New York State, USDA FSA | New York Natural Heritage Program | Esri Community Maps Contributors, BuildingFootprintUSA, Esri, HERE, Garmin, INCREMENT P, METI/NASA, USGS, EPA, NPS, US Census Bureau, USDA |

Figure 3

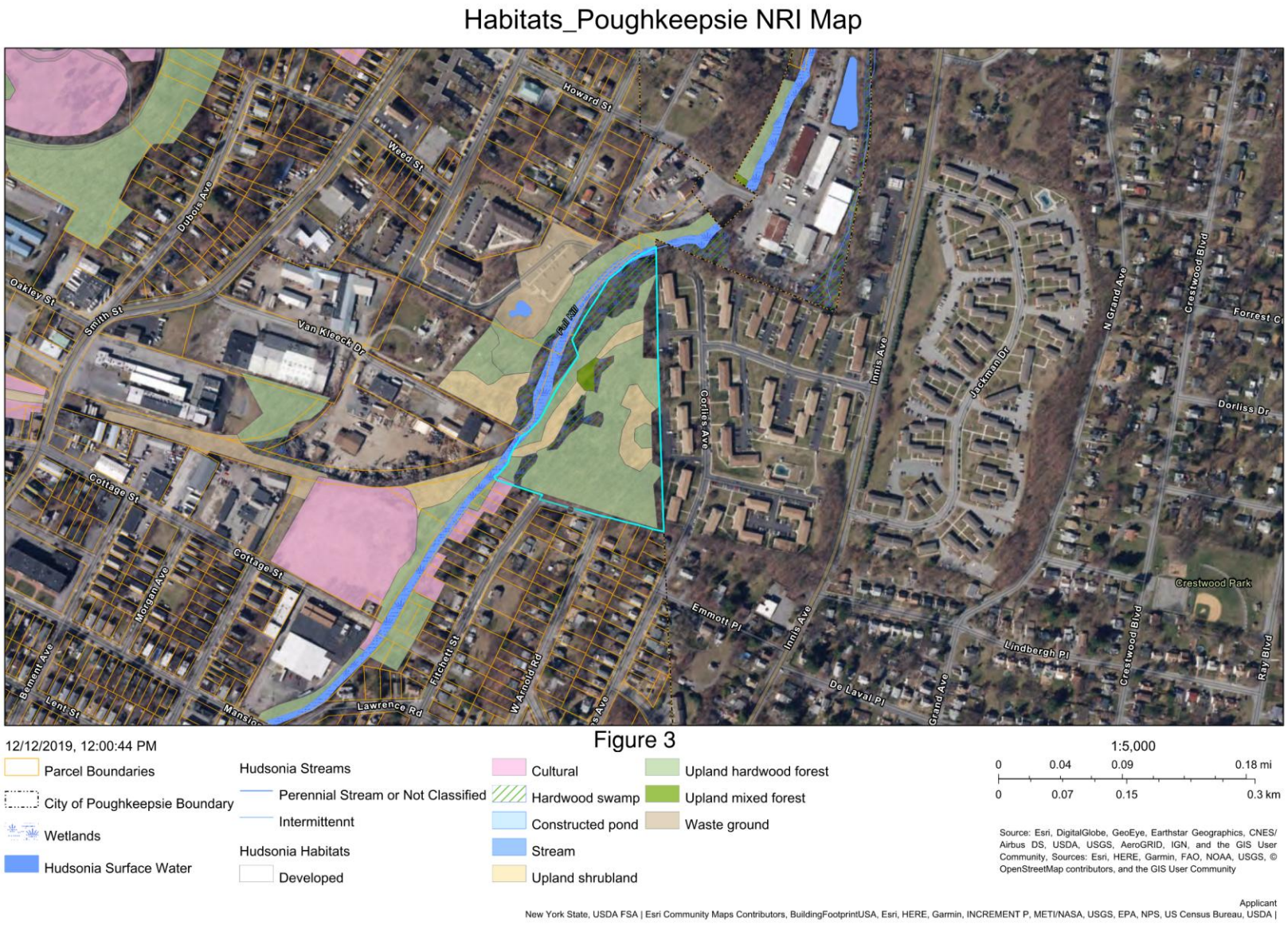
Habitats_Poughkeepsie NRI Map
Howard St
Weed St
Dubois Ave
Oakley St
Smith St
Van Kleeck Dr
Fallkill
Cottage St
Morgan Ave
Bement Ave
Lent St
Lawrence Rd
Fitchett St
W Arnold Rd
Corlies Ave
Innis Ave
Jackman Dr
N Grand Ave
Crestwood Blvd
Forrest C
Dorliss Dr
Crestwood Park
Emmett Pl
Lindbergh Pl
De Laval Pl
Grand Ave
Ray Blvd
Figure 3
12/12/2019, 12:00:44 PM
Parcel Boundaries
City of Poughkeepsie Boundary
Wetlands
Hudsonia Surface Water
Hudsonia Streams
Perennial Stream or Not Classified
Intermittennt
Hudsonia Habitats
Developed
Cultural
Hardwood swamp
Constructed pond
Stream
Upland shrubland
Upland hardwood forest
Upland mixed forest
Waste ground
1:5,000
0 0.04 0.09 0.18 mi
0 0.07 0.15 0.3 km
Source: Esri, DigitalGlobe, GeoEye, Earthstar Geographics, CNES/ Airbus DS, USDA, USGS, AeroGRID, IGN, and the GIS User Community, Sources: Esri, HERE, Garmin, FAO, NOAA, USGS, © OpenStreetMap contributors, and the GIS User Community
Applicant
New York State, USDA FSA | Esri Community Maps Contributors, BuildingFootprintUSA, Esri, HERE, Garmin, INCREMENT P, METI/NASA, USGS, EPA, NPS, US Census Bureau, USDA |

Page left intentionally blank

Figure 4

NYSDEC Environmental Resource Map

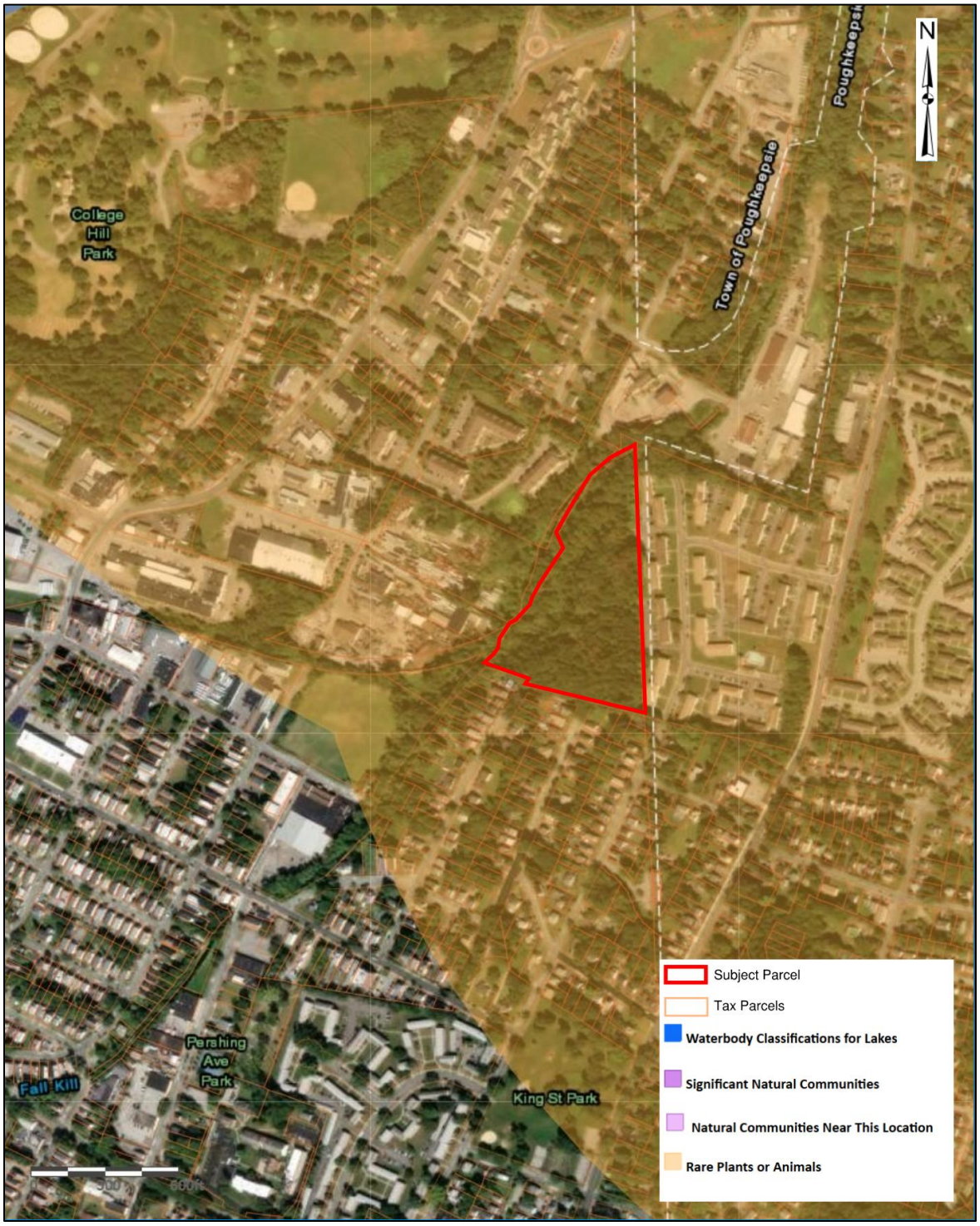

Page left intentionally blank

Figure 5

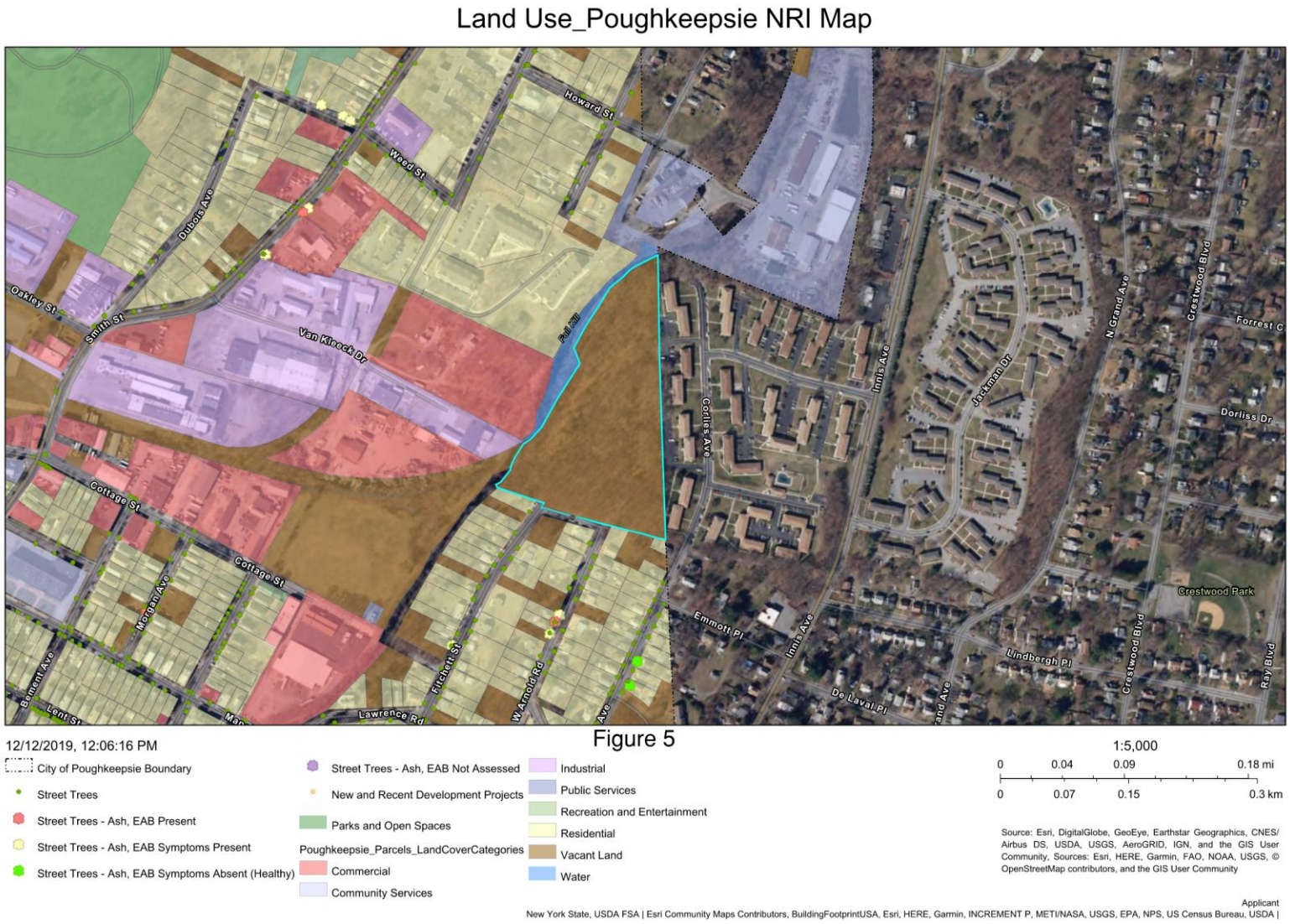
Land Use_Poughkeepsie NRI Map
Howard St
Weed St
Dubois Ave
Oakley St
Smith St
Van Kleeck Dr
Fall Kill
Cottage St
Morgan Ave
Belmont Ave
Lawrence Rd
Fitchett St
W Arnold Rd
Cordes Ave
Innis Ave
Jackman Dr
N Grand Ave
Crestwood Blvd
Forrest C
Dorliss Dr
Crestwood Park
Emmott Pl
Lindbergh Pl
De Laval Pl
Ray Blvd
Figure 5
12/12/2019, 12:06:16 PM
City of Poughkeepsie Boundary
Street Trees
Street Trees - Ash, EAB Present
Street Trees - Ash, EAB Symptoms Present
Street Trees - Ash, EAB Symptoms Absent (Healthy)
Street Trees - Ash, EAB Not Assessed
New and Recent Development Projects
Parks and Open Spaces
Poughkeepsie_Parcels_LandCoverCategories
Commercial
Community Services
Industrial
Public Services
Recreation and Entertainment
Residential
Vacant Land
Water
1:5,000
0 0.04 0.09 0.18 mi
0 0.07 0.15 0.3 km
Source: Esri, DigitalGlobe, GeoEye, Earthstar Geographics, CNES/ Airbus DS, USDA, USGS, AeroGRID, IGN, and the GIS User Community, Sources: Esri, HERE, Garmin, FAO, NOAA, USGS, © OpenStreetMap contributors, and the GIS User Community
Applicant
New York State, USDA FSA | Esri Community Maps Contributors, BuildingFootprintUSA, Esri, HERE, Garmin, INCREMENT P, METI/NASA, USGS, EPA, NPS, US Census Bureau, USDA |

Page left intentionally blank

Figure 6

NYSOPRHP Cultural Resource Information System (CRIS) Map

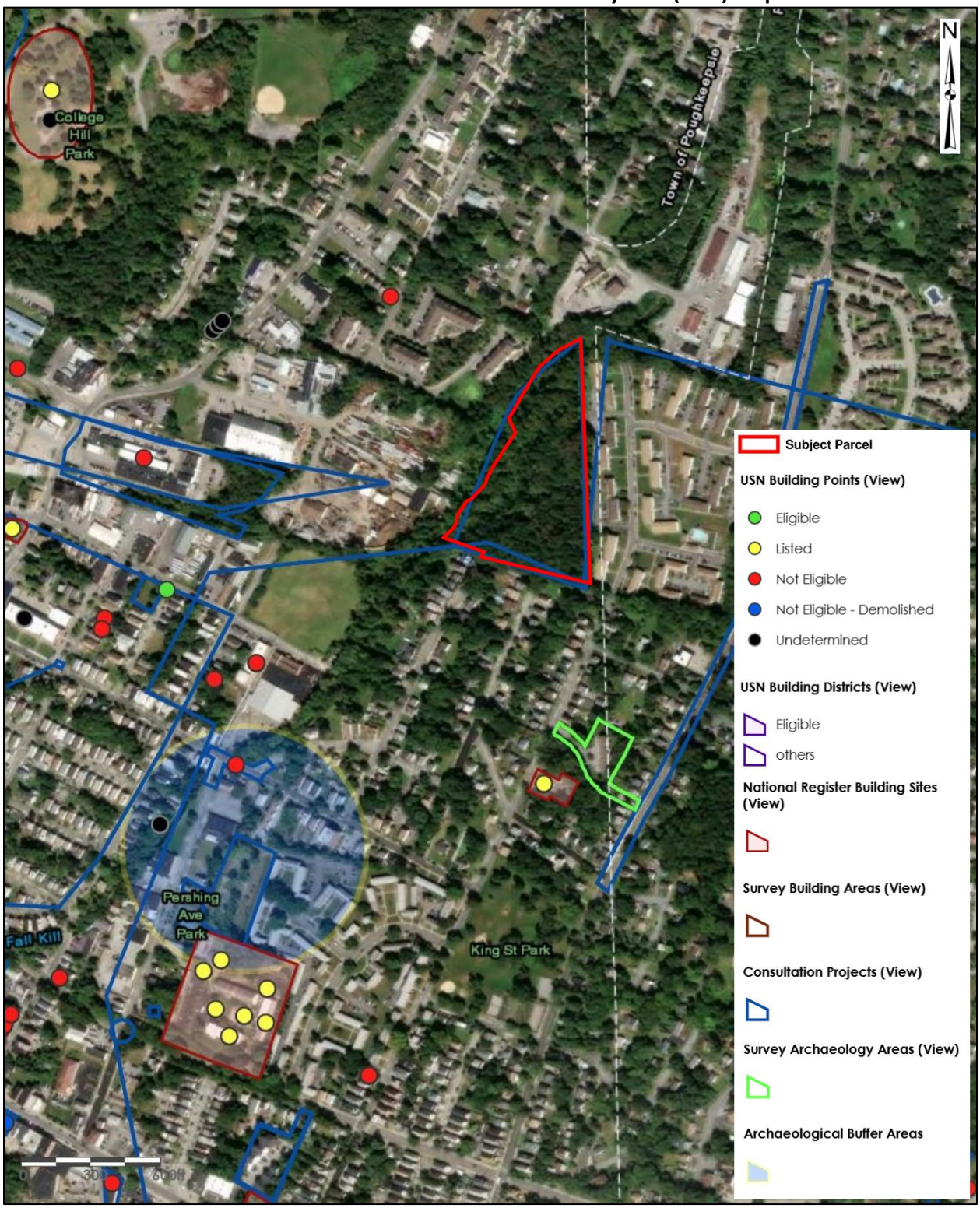

Page left intentionally blank

Figure 7

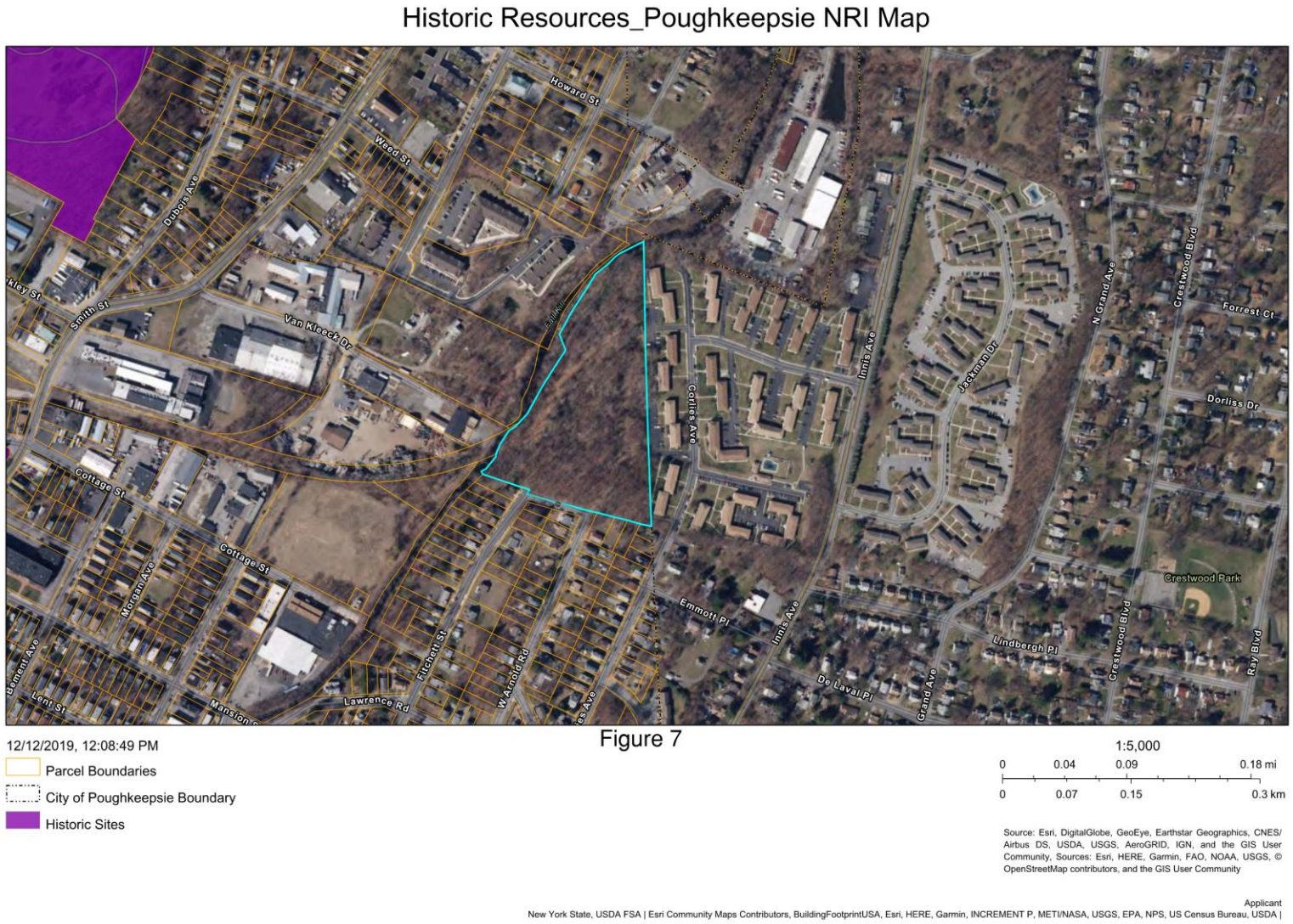
Historic Resources_Poughkeepsie NRI Map
Howard St
Weed St
Dubois Ave
Smith St
Van Kleeck Dr
Fallkill Ave
Collins Ave
Innis Ave
Jackman Dr
N Grand Ave
Crestwood Blvd
Forrest Ct
Dorliss Dr
Cottage St
Morgan Ave
Fitchett St
W Arnold Rd
Lawrence Rd
Emmott Pl
Lindbergh Pl
De Laval Pl
Grand Ave
Crestwood Park
Ray Blvd
Lent St
Figure 7
12/12/2019, 12:08:49 PM
Parcel Boundaries
City of Poughkeepsie Boundary
Historic Sites
1:5,000
0 0.04 0.09 0.18 mi
0 0.07 0.15 0.3 km
Source: Esri, DigitalGlobe, GeoEye, Earthstar Geographics, CNES/ Airbus DS, USDA, USGS, AeroGRID, IGN, and the GIS User Community, Sources: Esri, HERE, Garmin, FAO, NOAA, USGS, © OpenStreetMap contributors, and the GIS User Community
Applicant
New York State, USDA FSA | Esri Community Maps Contributors, BuildingFootprintUSA, Esri, HERE, Garmin, INCREMENT P, METI/NASA, USGS, EPA, NPS, US Census Bureau, USDA |

Figure 8

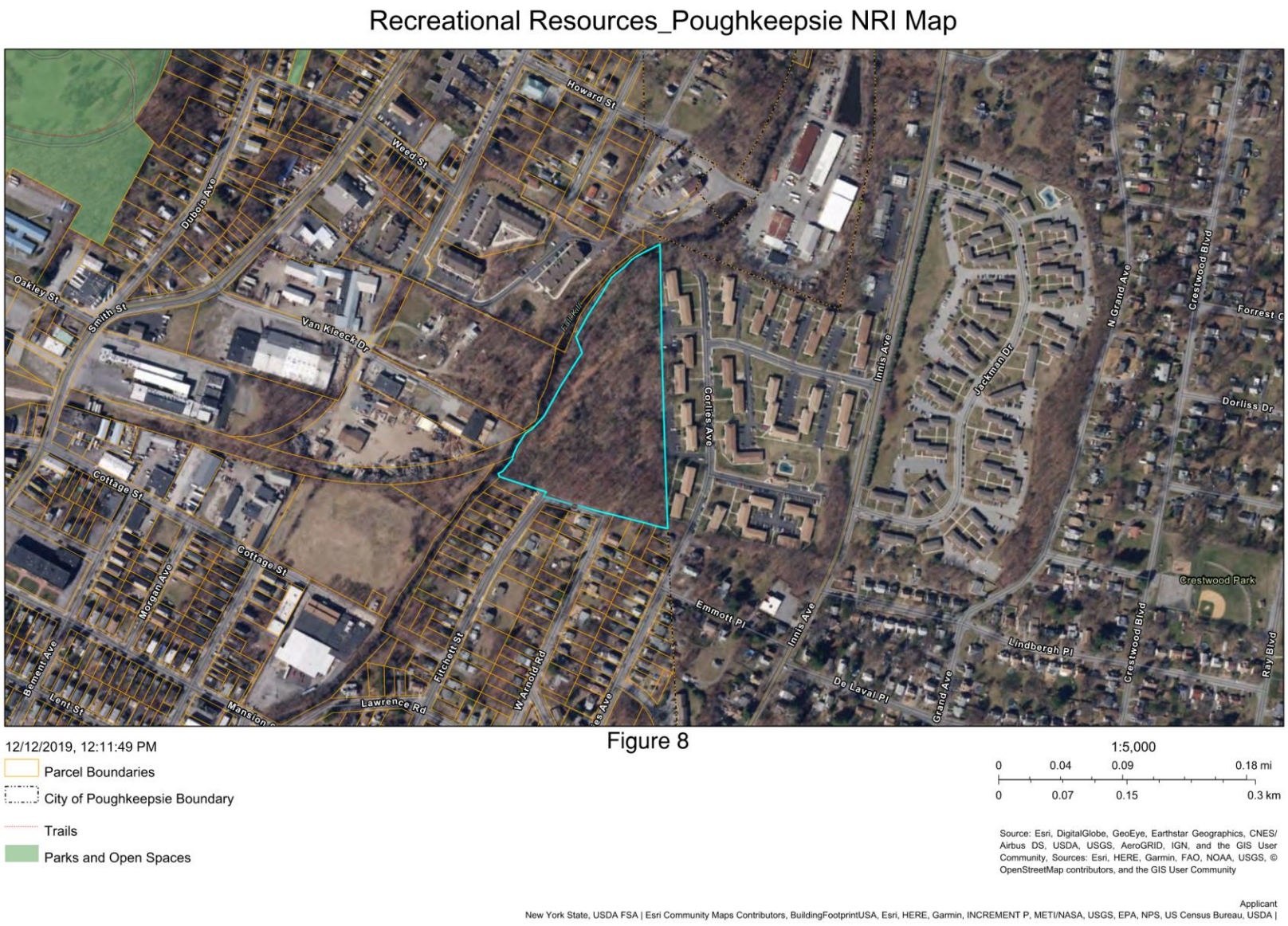

Figure 8

ATTACHMENT A
USFWS Official Species List

IPaC resource list

This report is an automatically generated list of species and other resources such as critical habitat (collectively referred to as *trust resources*) under the U.S. Fish and Wildlife Service's (USFWS) jurisdiction that are known or expected to be on or near the project area referenced below. The list may also include trust resources that occur outside of the project area, but that could potentially be directly or indirectly affected by activities in the project area. However, determining the likelihood and extent of effects a project may have on trust resources typically requires gathering additional site-specific (e.g., vegetation/species surveys) and project-specific (e.g., magnitude and timing of proposed activities) information.

Below is a summary of the project information you provided and contact information for the USFWS office(s) with jurisdiction in the defined project area. Please read the introduction to each section that follows (Endangered Species, Migratory Birds, USFWS Facilities, and NWI Wetlands) for additional information applicable to the trust resources addressed in that section.

NOT FOR CONSULTATION

Location

Dutchess County, New York



Local office

New York Ecological Services Field Office

(607) 753-9334
(607) 753-9699
fw5es_nyfo@fws.gov

3817 Luker Road
Cortland, NY 13045-9385

NOT FOR CONSULTATION

Endangered species

This resource list is for informational purposes only and does not constitute an analysis of project level impacts.

The primary information used to generate this list is the known or expected range of each species. Additional areas of influence (AOI) for species are also considered. An AOI includes areas outside of the species range if the species could be indirectly affected by activities in that area (e.g., placing a dam upstream of a fish population even if that fish does not occur at the dam site, may indirectly impact the species by reducing or eliminating water flow downstream). Because species can move, and site conditions can change, the species on this list are not guaranteed to be found on or near the project area. To fully determine any potential effects to species, additional site-specific and project-specific information is often required.

Section 7 of the Endangered Species Act **requires** Federal agencies to "request of the Secretary information whether any species which is listed or proposed to be listed may be present in the area of such proposed action" for any project that is conducted, permitted, funded, or licensed by any Federal agency. A letter from the local office and a species list which fulfills this requirement can **only** be obtained by requesting an official species list from either the Regulatory Review section in IPaC (see directions below) or from the local field office directly.

For project evaluations that require USFWS concurrence/review, please return to the IPaC website and request an official species list by doing the following:

1. Draw the project location and click CONTINUE.
2. Click DEFINE PROJECT.
3. Log in (if directed to do so).
4. Provide a name and description for your project.
5. Click REQUEST SPECIES LIST.

Listed species[1] and their critical habitats are managed by the Ecological Services Program of the U.S. Fish and Wildlife Service (USFWS) and the fisheries division of the National Oceanic and Atmospheric Administration (NOAA Fisheries[2]).

Species and critical habitats under the sole responsibility of NOAA Fisheries are **not** shown on this list. Please contact NOAA Fisheries for species under their jurisdiction.

---

1. Species listed under the Endangered Species Act are threatened or endangered; IPaC also shows species that are candidates, or proposed, for listing. See the listing status page for more information. IPaC only shows species that are regulated by USFWS (see FAQ).
2. NOAA Fisheries, also known as the National Marine Fisheries Service (NMFS), is an office of the National Oceanic and Atmospheric Administration within the Department of Commerce.

NOT FOR CONSULTATION

The following species are potentially affected by activities in this location:

Mammals

NAME	STATUS
Indiana Bat Myotis sodalis Wherever found There is **final** critical habitat for this species. Your location does not overlap the critical habitat. https://ecos.fws.gov/ecp/species/5949	Endangered
Northern Long-eared Bat Myotis septentrionalis Wherever found No critical habitat has been designated for this species. https://ecos.fws.gov/ecp/species/9045	Endangered
Tricolored Bat Perimyotis subflavus Wherever found No critical habitat has been designated for this species. https://ecos.fws.gov/ecp/species/10515	Proposed Endangered

Insects

NAME	STATUS
Monarch Butterfly Danaus plexippus Wherever found There is **proposed** critical habitat for this species. Your location does not overlap the critical habitat. https://ecos.fws.gov/ecp/species/9743	Proposed Threatened

NOT FOR CONSULTATION

Critical habitats

Potential effects to critical habitat(s) in this location must be analyzed along with the endangered species themselves.

There are no critical habitats at this location.

You are still required to determine if your project(s) may have effects on all above listed species.

Bald & Golden Eagles

Bald and Golden Eagles are protected under the Bald and Golden Eagle Protection Act [2] and the Migratory Bird Treaty Act (MBTA) [1]. Any person or organization who plans or conducts activities that may result in impacts to Bald or Golden Eagles, or their habitats, should follow appropriate regulations and consider implementing appropriate avoidance and minimization measures, as described in the various links on this page.

Additional information can be found using the following links:

- Eagle Management https://www.fws.gov/program/eagle-management
- Measures for avoiding and minimizing impacts to birds https://www.fws.gov/library/collections/avoiding-and-minimizing-incidental-take-migratory-birds
- Nationwide avoidance and minimization measures for birds https://www.fws.gov/sites/default/files/documents/nationwide-standard-conservation-measures.pdf
- Supplemental Information for Migratory Birds and Eagles in IPaC https://www.fws.gov/media/supplemental-information-migratory-birds-and-bald-and-golden-eagles-may-occur-project-action

There are Bald Eagles and/or Golden Eagles in your project area.

Measures for Proactively Minimizing Eagle Impacts
For information on how to best avoid and minimize disturbance to nesting bald eagles, please review the National Bald Eagle Management Guidelines. You may employ the timing and activity-specific distance recommendations in this document when designing your project/activity to avoid and minimize eagle impacts. For bald eagle information specific to Alaska, please refer to Bald Eagle Nesting and Sensitivity to Human Activity.

The FWS does not currently have guidelines for avoiding and minimizing disturbance to nesting Golden Eagles. For site-specific recommendations regarding nesting Golden Eagles, please consult with the appropriate Regional Migratory Bird Office or Ecological Services Field Office.

If disturbance or take of eagles cannot be avoided, an incidental take permit may be available to authorize any take that results from, but is not the purpose of, an otherwise lawful activity. For assistance making this determination for Bald Eagles, visit the Do I Need A Permit Tool. For assistance making this determination for golden eagles, please consult with the appropriate Regional Migratory Bird Office or Ecological Services Field Office.

Ensure Your Eagle List is Accurate and Complete
If your project area is in a poorly surveyed area in IPaC, your list may not be complete and you may need to rely on other resources to determine what species may be present (e.g. your local FWS field office, state surveys, your own surveys). Please review the Supplemental Information

NOT FOR CONSULTATION

on Migratory Birds and Eagles, to help you properly interpret the report for your specified location, including determining if there is sufficient data to ensure your list is accurate.

For guidance on when to schedule activities or implement avoidance and minimization measures to reduce impacts to bald or golden eagles on your list, see the "Probability of Presence Summary" below to see when these bald or golden eagles are most likely to be present and breeding in your project area.

Review the FAQs
The FAQs below provide important additional information and resources.

NAME	BREEDING SEASON
Bald Eagle Haliaeetus leucocephalus This is not a Bird of Conservation Concern (BCC) in this area, but warrants attention because of the Eagle Act or for potential susceptibilities in offshore areas from certain types of development or activities. https://ecos.fws.gov/ecp/species/1626	Breeds Dec 1 to Aug 31

NOT FOR CONSULTATION

Probability of Presence Summary

The graphs below provide our best understanding of when birds of concern are most likely to be present in your project area. This information can be used to tailor and schedule your project activities to avoid or minimize impacts to birds. Please make sure you read "Supplemental Information on Migratory Birds and Eagles", specifically the FAQ section titled "Proper Interpretation and Use of Your Migratory Bird Report" before using or attempting to interpret this report.

Probability of Presence (■)

Each green bar represents the bird's relative probability of presence in the 10km grid cell(s) your project overlaps during a particular week of the year. (A year is represented as 12 4-week months.) A taller bar indicates a higher probability of species presence. The survey effort (see below) can be used to establish a level of confidence in the presence score. One can have higher confidence in the presence score if the corresponding survey effort is also high.

How is the probability of presence score calculated? The calculation is done in three steps:

1. The probability of presence for each week is calculated as the number of survey events in the week where the species was detected divided by the total number of survey events for that week. For example, if in week 12 there were 20 survey events and the Spotted Towhee was found in 5 of them, the probability of presence of the Spotted Towhee in week 12 is 0.25.
2. To properly present the pattern of presence across the year, the relative probability of presence is calculated. This is the probability of presence divided by the maximum probability of presence across all weeks. For example, imagine the probability of presence in week 20 for the Spotted Towhee is 0.05, and that the probability of presence at week 12 (0.25) is the

maximum of any week of the year. The relative probability of presence on week 12 is 0.25/0.25 = 1; at week 20 it is 0.05/0.25 = 0.2.

3. The relative probability of presence calculated in the previous step undergoes a statistical conversion so that all possible values fall between 0 and 10, inclusive. This is the probability of presence score.

To see a bar's probability of presence score, simply hover your mouse cursor over the bar.

Breeding Season (▪)
Yellow bars denote a very liberal estimate of the time-frame inside which the bird breeds across its entire range. If there are no yellow bars shown for a bird, it does not breed in your project area.

Survey Effort (|)
Vertical black lines superimposed on probability of presence bars indicate the number of surveys performed for that species in the 10km grid cell(s) your project area overlaps. The number of surveys is expressed as a range, for example, 33 to 64 surveys.

To see a bar's survey effort range, simply hover your mouse cursor over the bar.

No Data (–)
A week is marked as having no data if there were no survey events for that week.

Survey Timeframe
Surveys from only the last 10 years are used in order to ensure delivery of currently relevant information. The exception to this is areas off the Atlantic coast, where bird returns are based on all years of available data, since data in these areas is currently much more sparse.

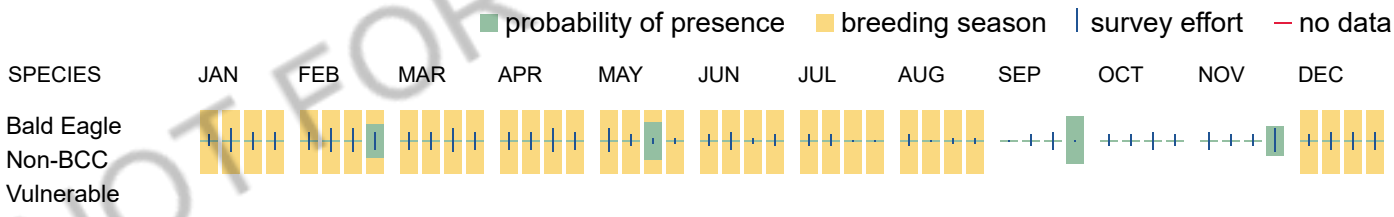

NOT FOR CONSULTATION

Bald & Golden Eagles FAQs

What does IPaC use to generate the potential presence of bald and golden eagles in my specified location?

The potential for eagle presence is derived from data provided by the Avian Knowledge Network (AKN). The AKN data is based on a growing collection of survey, banding, and citizen science datasets and is queried and filtered to return a list of those birds reported as occurring in the 10km grid cell(s) which your project intersects, and that have been identified as warranting special attention because they are an eagle (Bald and Golden Eagle Protection Act requirements may apply).

Proper interpretation and use of your eagle report
On the graphs provided, please look carefully at the survey effort (indicated by the black vertical line) and for the existence of the "no data" indicator (a red horizontal line). A high survey effort is the key component. If the survey effort is high, then the probability of presence score can be viewed as more dependable. In contrast, a low

survey effort line or no data line (red horizontal) means a lack of data and, therefore, a lack of certainty about presence of the species. This list is not perfect; it is simply a starting point for identifying what birds have the potential to be in your project area, when they might be there, and if they might be breeding (which means nests might be present). The list and associated information help you know what to look for to confirm presence and helps guide you in knowing when to implement avoidance and minimization measures to eliminate or reduce potential impacts from your project activities or get the appropriate permits should presence be confirmed.

How do I know if eagles are breeding, wintering, or migrating in my area?

To see what part of a particular bird's range your project area falls within (i.e. breeding, wintering, migrating, or resident), you may query your location using the RAIL Tool and view the range maps provided for birds in your area at the bottom of the profiles provided for each bird in your results. If an eagle on your IPaC migratory bird species list has a breeding season associated with it (indicated by yellow vertical bars on the phenology graph in your “IPaC PROBABILITY OF PRESENCE SUMMARY” at the top of your results list), there may be nests present at some point within the timeframe specified. If "Breeds elsewhere" is indicated, then the bird likely does not breed in your project area.

Interpreting the Probability of Presence Graphs

Each green bar represents the bird's relative probability of presence in the 10km grid cell(s) your project overlaps during a particular week of the year. A taller bar indicates a higher probability of species presence. The survey effort can be used to establish a level of confidence in the presence score.

How is the probability of presence score calculated? The calculation is done in three steps:
The probability of presence for each week is calculated as the number of survey events in the week where the species was detected divided by the total number of survey events for that week. For example, if in week 12 there were 20 survey events and the Spotted Towhee was found in 5 of them, the probability of presence of the Spotted Towhee in week 12 is 0.25.

To properly present the pattern of presence across the year, the relative probability of presence is calculated. This is the probability of presence divided by the maximum probability of presence across all weeks. For example, imagine the probability of presence in week 20 for the Spotted Towhee is 0.05, and that the probability of presence at week 12 (0.25) is the maximum of any week of the year. The relative probability of presence on week 12 is 0.25/0.25 = 1; at week 20 it is 0.05/0.25 = 0.2.

The relative probability of presence calculated in the previous step undergoes a statistical conversion so that all possible values fall between 0 and 10, inclusive. This is the probability of presence score.

Breeding Season ()
Yellow bars denote a very liberal estimate of the time-frame inside which the bird breeds across its entire range. If there are no yellow bars shown for a bird, it does not breed in your project area.

Survey Effort ()
Vertical black lines superimposed on probability of presence bars indicate the number of surveys performed for that species in the 10km grid cell(s) your project area overlaps.

No Data ()
A week is marked as having no data if there were no survey events for that week.

Survey Timeframe
Surveys from only the last 10 years are used in order to ensure delivery of currently relevant information. The exception to this is areas off the Atlantic coast, where bird returns are based on all years of available data, since data in these areas is currently much more sparse.

NOT FOR CONSULTATION

Migratory birds

The Migratory Bird Treaty Act (MBTA) [1] prohibits the take (including killing, capturing, selling, trading, and transport) of protected migratory bird species without prior authorization by the Department of Interior U.S. Fish and Wildlife Service (Service).

1. The Migratory Birds Treaty Act of 1918.
2. The Bald and Golden Eagle Protection Act of 1940.

Additional information can be found using the following links:

- Eagle Management https://www.fws.gov/program/eagle-management
- Measures for avoiding and minimizing impacts to birds https://www.fws.gov/library/collections/avoiding-and-minimizing-incidental-take-migratory-birds
- Nationwide avoidance and minimization measures for birds
- Supplemental Information for Migratory Birds and Eagles in IPaC https://www.fws.gov/media/supplemental-information-migratory-birds-and-bald-and-golden-eagles-may-occur-project-action

Measures for Proactively Minimizing Migratory Bird Impacts

Your IPaC Migratory Bird list showcases birds of concern, including Birds of Conservation Concern (BCC), in your project location. This is not a comprehensive list of all birds found in your project area. However, you can help proactively minimize significant impacts to all birds at your project location by implementing the measures in the Nationwide avoidance and minimization measures for birds document, and any other project-specific avoidance and minimization measures suggested at the link Measures for avoiding and minimizing impacts to birds for the birds of concern on your list below.

Ensure Your Migratory Bird List is Accurate and Complete

If your project area is in a poorly surveyed area, your list may not be complete and you may need to rely on other resources to determine what species may be present (e.g. your local FWS field office, state surveys, your own surveys). Please review the Supplemental Information on Migratory Birds and Eagles document, to help you properly interpret the report for your specified location, including determining if there is sufficient data to ensure your list is accurate.

For guidance on when to schedule activities or implement avoidance and minimization measures to reduce impacts to migratory birds on your list, see the "Probability of Presence Summary" below to see when these birds are most likely to be present and breeding in your project area.

Review the FAQs

The FAQs below provide important additional information and resources.

NAME	BREEDING SEASON

NOT FOR CONSULTATION

Bald Eagle Haliaeetus leucocephalus This is not a Bird of Conservation Concern (BCC) in this area, but warrants attention because of the Eagle Act or for potential susceptibilities in offshore areas from certain types of development or activities. https://ecos.fws.gov/ecp/species/1626	Breeds Dec 1 to Aug 31
Belted Kingfisher Megaceryle alcyon This is a Bird of Conservation Concern (BCC) only in particular Bird Conservation Regions (BCRs) in the continental USA	Breeds Mar 15 to Jul 25
Black-billed Cuckoo Coccyzus erythropthalmus This is a Bird of Conservation Concern (BCC) throughout its range in the continental USA and Alaska. https://ecos.fws.gov/ecp/species/9399	Breeds May 15 to Oct 10
Blue-winged Warbler Vermivora cyanoptera This is a Bird of Conservation Concern (BCC) only in particular Bird Conservation Regions (BCRs) in the continental USA	Breeds May 1 to Jun 30
Bobolink Dolichonyx oryzivorus This is a Bird of Conservation Concern (BCC) throughout its range in the continental USA and Alaska.	Breeds May 20 to Jul 31
Canada Warbler Cardellina canadensis This is a Bird of Conservation Concern (BCC) throughout its range in the continental USA and Alaska.	Breeds May 20 to Aug 10
Chimney Swift Chaetura pelagica This is a Bird of Conservation Concern (BCC) throughout its range in the continental USA and Alaska.	Breeds Mar 15 to Aug 25
Eastern Meadowlark Sturnella magna This is a Bird of Conservation Concern (BCC) only in particular Bird Conservation Regions (BCRs) in the continental USA	Breeds Apr 25 to Aug 31
Evening Grosbeak Coccothraustes vespertinus This is a Bird of Conservation Concern (BCC) throughout its range in the continental USA and Alaska.	Breeds May 15 to Aug 10

NOT FOR CONSULTATION

Lesser Yellowlegs Tringa flavipes This is a Bird of Conservation Concern (BCC) throughout its range in the continental USA and Alaska. https://ecos.fws.gov/ecp/species/9679	Breeds elsewhere
Prairie Warbler Setophaga discolor This is a Bird of Conservation Concern (BCC) throughout its range in the continental USA and Alaska.	Breeds May 1 to Jul 31
Red-headed Woodpecker Melanerpes erythrocephalus This is a Bird of Conservation Concern (BCC) throughout its range in the continental USA and Alaska.	Breeds May 10 to Sep 10
Rose-breasted Grosbeak Pheucticus ludovicianus This is a Bird of Conservation Concern (BCC) only in particular Bird Conservation Regions (BCRs) in the continental USA	Breeds May 15 to Jul 31
Semipalmated Sandpiper Calidris pusilla This is a Bird of Conservation Concern (BCC) only in particular Bird Conservation Regions (BCRs) in the continental USA	Breeds elsewhere
Wood Thrush Hylocichla mustelina This is a Bird of Conservation Concern (BCC) throughout its range in the continental USA and Alaska.	Breeds May 10 to Aug 31

NOT FOR CONSULTATION

Probability of Presence Summary

The graphs below provide our best understanding of when birds of concern are most likely to be present in your project area. This information can be used to tailor and schedule your project activities to avoid or minimize impacts to birds. Please make sure you read "Supplemental Information on Migratory Birds and Eagles", specifically the FAQ section titled "Proper Interpretation and Use of Your Migratory Bird Report" before using or attempting to interpret this report.

Probability of Presence (■)

Each green bar represents the bird's relative probability of presence in the 10km grid cell(s) your project overlaps during a particular week of the year. (A year is represented as 12 4-week months.) A taller bar indicates a higher probability of species presence. The survey effort (see below) can be used to establish a level of confidence in the presence score. One can have higher confidence in the presence score if the corresponding survey effort is also high.

How is the probability of presence score calculated? The calculation is done in three steps:

1. The probability of presence for each week is calculated as the number of survey events in the week where the species was detected divided by the total number of survey events for that week. For example, if in week 12 there were 20 survey events and the Spotted Towhee was found in 5 of them, the probability of presence of the Spotted Towhee in week 12 is 0.25.
2. To properly present the pattern of presence across the year, the relative probability of presence is calculated. This is the probability of presence divided by the maximum probability of presence across all weeks. For example, imagine the probability of presence in week 20 for the Spotted Towhee is 0.05, and that the probability of presence at week 12 (0.25) is the maximum of any week of the year. The relative probability of presence on week 12 is 0.25/0.25 = 1; at week 20 it is 0.05/0.25 = 0.2.
3. The relative probability of presence calculated in the previous step undergoes a statistical conversion so that all possible values fall between 0 and 10, inclusive. This is the probability of presence score.

To see a bar's probability of presence score, simply hover your mouse cursor over the bar.

Breeding Season (▪)
Yellow bars denote a very liberal estimate of the time-frame inside which the bird breeds across its entire range. If there are no yellow bars shown for a bird, it does not breed in your project area.

Survey Effort (|)
Vertical black lines superimposed on probability of presence bars indicate the number of surveys performed for that species in the 10km grid cell(s) your project area overlaps. The number of surveys is expressed as a range, for example, 33 to 64 surveys.

To see a bar's survey effort range, simply hover your mouse cursor over the bar.

No Data (–)
A week is marked as having no data if there were no survey events for that week.

Survey Timeframe
Surveys from only the last 10 years are used in order to ensure delivery of currently relevant information. The exception to this is areas off the Atlantic coast, where bird returns are based on all years of available data, since data in these areas is currently much more sparse.

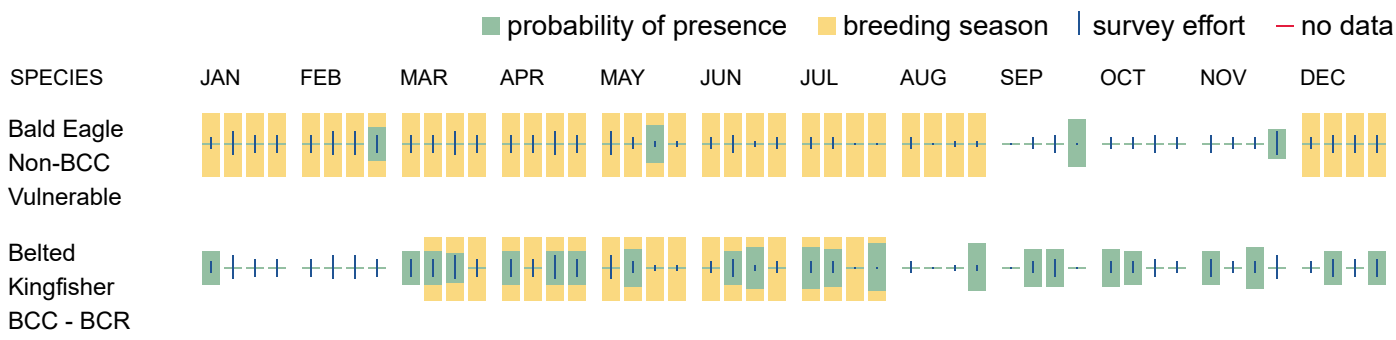

NOT FOR CONSULTATION

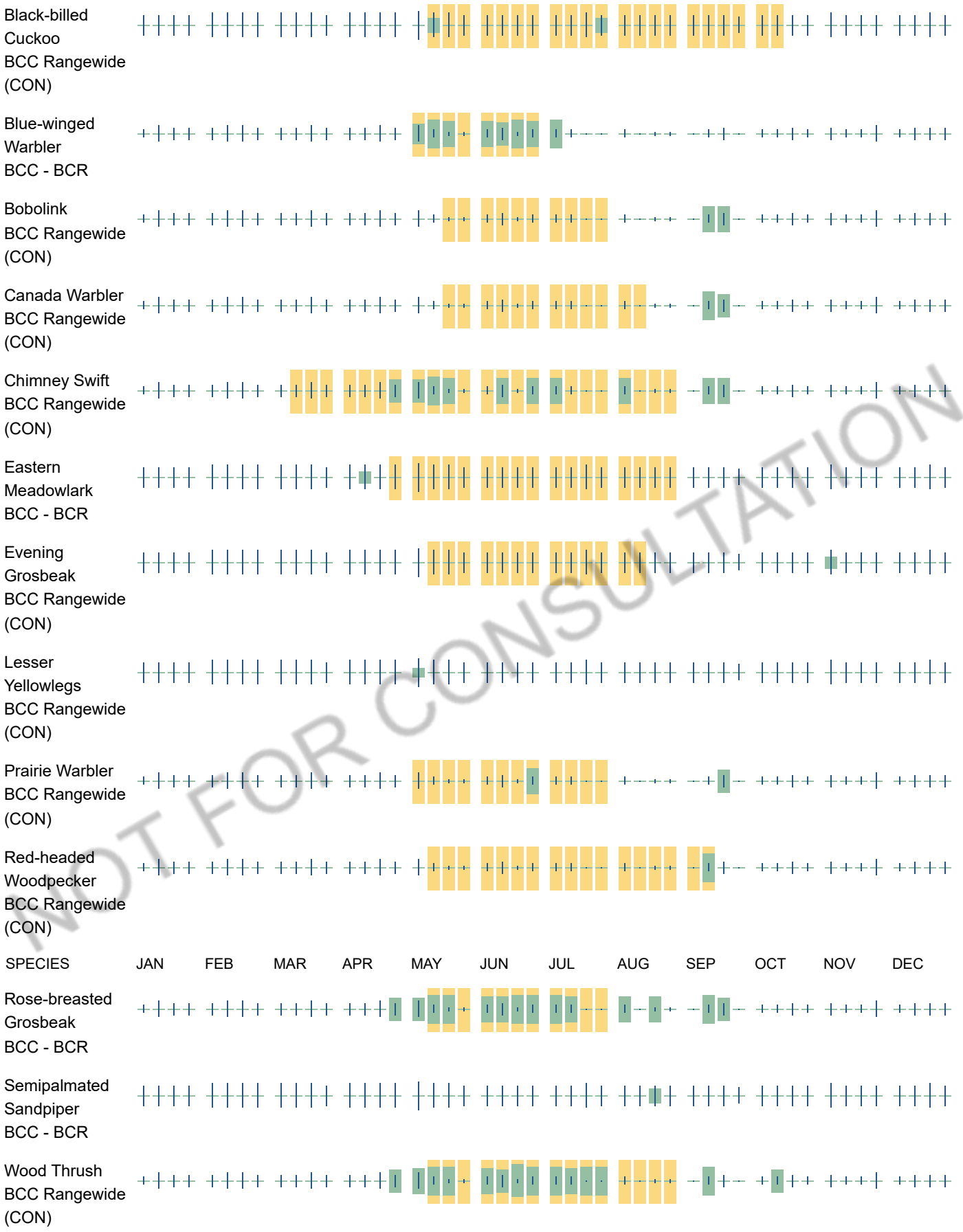

NOT FOR CONSULTATION

Migratory Bird FAQs

Tell me more about avoidance and minimization measures I can implement to avoid or minimize impacts to migratory birds.

Nationwide Avoidance & Minimization Measures for Birds describes measures that can help avoid and minimize impacts to all birds at any location year-round. When birds may be breeding in the area, identifying the locations of any active nests and avoiding their destruction is one of the most effective ways to minimize impacts. To see when birds are most likely to occur and breed in your project area, view the Probability of Presence Summary. Additional measures or permits may be advisable depending on the type of activity you are conducting and the type of infrastructure or bird species present on your project site.

What does IPaC use to generate the list of migratory birds that potentially occur in my specified location?

The Migratory Bird Resource List is comprised of Birds of Conservation Concern (BCC) and other species that may warrant special attention in your project location, such as those listed under the Endangered Species Act or the Bald and Golden Eagle Protection Act and those species marked as “Vulnerable”. See the FAQ “What are the levels of concern for migratory birds?” for more information on the levels of concern covered in the IPaC migratory bird species list.

The migratory bird list generated for your project is derived from data provided by the Avian Knowledge Network (AKN). The AKN data is based on a growing collection of survey, banding, and citizen science datasets and is queried and filtered to return a list of those birds reported as occurring in the 10km grid cell(s) with which your project intersects. These species have been identified as warranting special attention because they are BCC species in that area, an eagle (Bald and Golden Eagle Protection Act requirements may apply), or a species that has a particular vulnerability to offshore activities or development.

Again, the Migratory Bird Resource list includes only a subset of birds that may occur in your project area. It is not representative of all birds that may occur in your project area. To get a list of all birds potentially present in your project area, and to verify survey effort when no results present, please visit the Rapid Avian Information Locator (RAIL) Tool.

Why are subspecies showing up on my list?

Subspecies profiles are included on the list of species present in your project area because observations in the AKN for **the species** are being detected. If the species are present, that means that the subspecies may also be present. If a subspecies shows up on your list, you may need to rely on other resources to determine if that subspecies may be present (e.g. your local FWS field office, state surveys, your own surveys).

What does IPaC use to generate the probability of presence graphs for the migratory birds potentially occurring in my specified location?

The probability of presence graphs associated with your migratory bird list are based on data provided by the Avian Knowledge Network (AKN). This data is derived from a growing collection of survey, banding, and citizen science datasets.

Probability of presence data is continuously being updated as new and better information becomes available. To learn more about how the probability of presence graphs are produced and how to interpret them, go to the Probability of Presence Summary and then click on the "Tell me about these graphs" link.

How do I know if a bird is breeding, wintering, or migrating in my area?

NOT FOR CONSULTATION

To see what part of a particular bird's range your project area falls within (i.e. breeding, wintering, migrating, or resident), you may query your location using the RAIL Tool and view the range maps provided for birds in your area at the bottom of the profiles provided for each bird in your results. If a bird on your IPaC migratory bird species list has a breeding season associated with it (indicated by yellow vertical bars on the phenology graph in your “IPaC PROBABILITY OF PRESENCE SUMMARY” at the top of your results list), there may be nests present at some point within the timeframe specified. If "Breeds elsewhere" is indicated, then the bird likely does not breed in your project area.

What are the levels of concern for migratory birds?

Migratory birds delivered through IPaC fall into the following distinct categories of concern:

1. "BCC Rangewide" birds are Birds of Conservation Concern (BCC) that are of concern throughout their range anywhere within the USA (including Hawaii, the Pacific Islands, Puerto Rico, and the Virgin Islands);
2. "BCC - BCR" birds are BCCs that are of concern only in particular Bird Conservation Regions (BCRs) in the continental USA; and
3. "Non-BCC - Vulnerable" birds are not BCC species in your project area, but appear on your list either because of the Bald and Golden Eagle Protection Act requirements (for eagles) or (for non-eagles) potential susceptibilities in offshore areas from certain types of development or activities (e.g. offshore energy development or longline fishing).

Although it is important to avoid and minimize impacts to all birds, efforts should be made, in particular, to avoid and minimize impacts to the birds on this list, especially BCC species. For more information on avoidance and minimization measures you can implement to help avoid and minimize migratory bird impacts, please see the FAQ “Tell me more about avoidance and minimization measures I can implement to avoid or minimize impacts to migratory birds”.

Details about birds that are potentially affected by offshore projects

For additional details about the relative occurrence and abundance of both individual bird species and groups of bird species within your project area off the Atlantic Coast, please visit the Northeast Ocean Data Portal. The Portal also offers data and information about other taxa besides birds that may be helpful to you in your project review. Alternately, you may download the bird model results files underlying the portal maps through the NOAA NCCOS Integrative Statistical Modeling and Predictive Mapping of Marine Bird Distributions and Abundance on the Atlantic Outer Continental Shelf project webpage.

Proper interpretation and use of your migratory bird report

The migratory bird list generated is not a list of all birds in your project area, only a subset of birds of priority concern. To learn more about how your list is generated and see options for identifying what other birds may be in your project area, please see the FAQ "What does IPaC use to generate the migratory birds potentially occurring in my specified location". Please be aware this report provides the "probability of presence" of birds within the 10 km grid cell(s) that overlap your project; not your exact project footprint. On the graphs provided, please look carefully at the survey effort (indicated by the black vertical line) and for the existence of the "no data" indicator (a red horizontal line). A high survey effort is the key component. If the survey effort is high, then the probability of presence score can be viewed as more dependable. In contrast, a low survey effort bar or no data bar means a lack of data and, therefore, a lack of certainty about presence of the species. This list does not represent all birds present in your project area. It is simply a starting point for identifying what birds of concern have the potential to be in your project area, when they might be there, and if they might be breeding (which means nests might be present). The list and associated information help you know what to look for to confirm presence and helps guide implementation of avoidance and minimization measures to eliminate or reduce

NOT FOR CONSULTATION

potential impacts from your project activities, should presence be confirmed. To learn more about avoidance and minimization measures, visit the FAQ "Tell me about avoidance and minimization measures I can implement to avoid or minimize impacts to migratory birds".

Interpreting the Probability of Presence Graphs
Each green bar represents the bird's relative probability of presence in the 10km grid cell(s) your project overlaps during a particular week of the year. A taller bar indicates a higher probability of species presence. The survey effort can be used to establish a level of confidence in the presence score.

How is the probability of presence score calculated? The calculation is done in three steps:
The probability of presence for each week is calculated as the number of survey events in the week where the species was detected divided by the total number of survey events for that week. For example, if in week 12 there were 20 survey events and the Spotted Towhee was found in 5 of them, the probability of presence of the Spotted Towhee in week 12 is 0.25.

To properly present the pattern of presence across the year, the relative probability of presence is calculated. This is the probability of presence divided by the maximum probability of presence across all weeks. For example, imagine the probability of presence in week 20 for the Spotted Towhee is 0.05, and that the probability of presence at week 12 (0.25) is the maximum of any week of the year. The relative probability of presence on week 12 is 0.25/0.25 = 1; at week 20 it is 0.05/0.25 = 0.2.

The relative probability of presence calculated in the previous step undergoes a statistical conversion so that all possible values fall between 0 and 10, inclusive. This is the probability of presence score.

Breeding Season ()
Yellow bars denote a very liberal estimate of the time-frame inside which the bird breeds across its entire range. If there are no yellow bars shown for a bird, it does not breed in your project area.

Survey Effort ()
Vertical black lines superimposed on probability of presence bars indicate the number of surveys performed for that species in the 10km grid cell(s) your project area overlaps.

No Data ()
A week is marked as having no data if there were no survey events for that week.

Survey Timeframe
Surveys from only the last 10 years are used in order to ensure delivery of currently relevant information. The exception to this is areas off the Atlantic coast, where bird returns are based on all years of available data, since data in these areas is currently much more sparse.

NOT FOR CONSULTATION

Facilities

National Wildlife Refuge lands

Any activity proposed on lands managed by the National Wildlife Refuge system must undergo a 'Compatibility Determination' conducted by the Refuge. Please contact the individual Refuges to discuss any questions or concerns.

There are no refuge lands at this location.

Fish hatcheries

There are no fish hatcheries at this location.

Wetlands in the National Wetlands Inventory (NWI)

Impacts to NWI wetlands and other aquatic habitats may be subject to regulation under Section 404 of the Clean Water Act, or other State/Federal statutes.

For more information please contact the Regulatory Program of the local U.S. Army Corps of Engineers District.

Please note that the NWI data being shown may be out of date. We are currently working to update our NWI data set. We recommend you verify these results with a site visit to determine the actual extent of wetlands on site.

This location overlaps the following wetlands:

FRESHWATER FORESTED/SHRUB WETLAND
PFO1E

RIVERINE
R3UBH

A full description for each wetland code can be found at the National Wetlands Inventory website

NOTE: This initial screening does **not** replace an on-site delineation to determine whether wetlands occur. Additional information on the NWI data is provided below.

Data limitations

The Service's objective of mapping wetlands and deepwater habitats is to produce reconnaissance level information on the location, type and size of these resources. The maps are prepared from the analysis of high altitude imagery. Wetlands are identified based on vegetation, visible hydrology and geography. A margin of error is inherent in the use of imagery; thus, detailed on-the-ground inspection of any particular site may result in revision of the wetland boundaries or classification established through image analysis.

NOT FOR CONSULTATION

The accuracy of image interpretation depends on the quality of the imagery, the experience of the image analysts, the amount and quality of the collateral data and the amount of ground truth verification work conducted. Metadata should be consulted to determine the date of the source imagery used and any mapping problems.

Wetlands or other mapped features may have changed since the date of the imagery or field work. There may be occasional differences in polygon boundaries or classifications between the information depicted on the map and the actual conditions on site.

Data exclusions

Certain wetland habitats are excluded from the National mapping program because of the limitations of aerial imagery as the primary data source used to detect wetlands. These habitats include seagrasses or submerged aquatic vegetation that are found in the intertidal and subtidal zones of estuaries and nearshore coastal waters. Some deepwater reef communities (coral or tuberficid worm reefs) have also been excluded from the inventory. These habitats, because of their depth, go undetected by aerial imagery.

Data precautions

Federal, state, and local regulatory agencies with jurisdiction over wetlands may define and describe wetlands in a different manner than that used in this inventory. There is no attempt, in either the design or products of this inventory, to define the limits of proprietary jurisdiction of any Federal, state, or local government or to establish the geographical scope of the regulatory programs of government agencies. Persons intending to engage in activities involving modifications within or adjacent to wetland areas should seek the advice of appropriate Federal, state, or local agencies concerning specified agency regulatory programs and proprietary jurisdictions that may affect such activities.

NOT FOR CONSULTATION

RECEIVED
By

APPLICATION TO THE PLANNING BOARD
CITY OF POUGHKEEPSIE, NEW YORK

Application for Site Plan, Special Permit & Facade Approval

OFFICE USE ONLY
CODE: PLSF
ID #_____
FEE: _____
Total, from:
$500, plus
$_____
($150 per 1000 square feet of floor area), plus
$_____
($35 per number of required parking spaces), plus
$_____
($500 for special permit, if applicable)

I. **PROPERTY ADDRESS:** Milton Street, City of Poughkeepsie, New York

II. **PROPERTY OWNER:** Maselo Realty, LLC (Simon Abikhzer)
ADDRESS: 18 Eastview Road
Monsey, NY 10952 (state and zip code)
PHONE NUMBER: 845-341- 395 (include area code)

III. **NAME OF APPLICANT:** Maselo Realty, LLC (Simon Abikhzer)
ADDRESS: 18 Eastview Road
Monsey, NY 109 8 (state and zip code)
PHONE NUMBER: 845-341-7395 (include area code)
EMAIL ADDRESS: [redacted]

(If applicant is NOT the owner, proof of owner's consent to the application MUST be provided.)

IV. **CONSULTANT:** LaBella Associates, Caren LoBrutto
ADDRESS: 21 Fox Street
Poughkeepsie, NY 12601 (state and zip code)
PHONE NUMBER: 845-486-1458 (include area code)
EMAIL ADDRESS: [redacted]

V. **PROPOSED USE or FAÇADE CHANGE** (Summarize proposed use or uses): The proposed construction of a 63-apartment unit clustered multifamily development within two buildings with two accesses off Milton Street.

VI. **ZONING DISTRICT:** Residential Neighborhood A (RNA)

(Proceed to XVII for special permit & façade approval only)

Revised January 2025: Previous Editions Obsolete

PROJECT INFORMATION

New construction: X (yes) _____ (no)

Change of use: _____ (yes) X (no)

Expansion/addition: _____ (yes) X (no)

Alteration: _____ (yes) X (no)

Cost of Construction: $ To be determined

LOT AND BULK INFORMATION:

Lot area: 8.713 (acres) 379,539.8 (square feet)

Building Footprint: 11,537 (proposed square feet for new construction)

0.00 (existing square feet for change of use/expansion)

0.00 (additional proposed square feet for expansion)

24,490 (total building footprint, square feet)

Lot Coverage: 6.45 (percentage, building coverage only)

Gross Floor Area: 80,759 (proposed square feet for new construction)

0.00 (existing square feet for change of use/expansion)

0.00 (additional proposed square feet for expansion)

96,760 (total gross floor area, square feet)

Building Height: 3.5 (stories) 35 (feet)

Floor Area Ratio: 0.25 (ratio of gross floor area divided by lot area)

VIII. PROJECT PARKING INFORMATION

A) Number of Off-Street Parking Spaces required: 79

B) Number of Off-Street Parking Spaces provided: 124

C) Waiver Requested: _____ (Yes) X (No)

Is municipal parking available within 600 feet? _____ (Yes) X (No)

If yes, name all such municipal facilities: N/A

(If a waiver is requested based on proximity to municipal facilities, a written request for such waiver, addressed to the City Planning Staff and the Chairman of the Planning Board, must be submitted with the application.)

If a private parking facility is to be utilized, is such facility within 600 feet?

_____ (Yes) (No)

If yes, provide the address of the facility, name of the property owner, number of spaces in the lot, number of spaces available for lease, and length of lease. Attach copy of lease. Additional information may be required by the Planning Board): N/A

IX. RESIDENTIAL PROPOSALS

A) Type of Development: Multiple residence rental apartments
(Townhouse, condominium, multiple residence rental, etc.)

B) Unit Breakdown:

Number of efficiency or "studio" units: None

Number of one (1) bedroom units: 31

Number of two (2) bedroom unit's 32

Number with three or more bedrooms: None

Total number of units: 63

C) Is funding public?_____Yes__X__No
If yes, describe funding source: _____

X. OFFICE PROPOSALS (____Medical/Dental_____Professional_____Business)

A) Number of Employees: _____
B) Number of doctors/dentists/medical practitioners: _____
C) Days/Hours of Operation: _____

XI. SERVICE BUSINESS PROPOSALS

A) Specify Business: _____
(e.g., laundromat, drycleaner, beauty parlor, travel agency, banks)

B) Number of Employees: _____

C) Number of Washing Machines (for laundromat): _____

D) Days/Hours of Operation: _____

XII. MERCANTILE PROPOSALS (Retail_____Wholesale_____)

A) Type of Mercantile (specify): _____

B) Number of Employees: _____

C) Days/Hours of Operation: _____

XIII. STANDARD RESTAURANT/FAST FOOD RESTAURANT/COFFEE SHOP/DONUT SHOP/NIGHTCLUB/DISCOTHEQUE/BAR PROPOSALS

A) Specify Use: _____

B) Number of seats (excluding bar stools and outdoor seating): _____

C) Meals served (i.e., breakfast, lunch, dinner): _____

D) Type of Menu: _____

E) Days/Hours of Operation: _____

F) Entertainment (live and/or recorded): _____

G) Will the restaurant contain a bar/lounge?: _____Yes_____No

H) If yes, how many seats at the bar? _____

I) Is a drive-through window proposed? _____

J) Is a walk-up window proposed? _____

K) Is an outdoor seating area proposed? _____

L) If yes, how many seats are proposed? _____

M) If yes, is outdoor cooking proposed? _____

XIV. INDUSTRIAL/COMMERCIAL PROPOSALS (Automobile repair, taxi, motor vehicle sales, warehouse, manufacturing, animal hospital, research facilities, etc.)

A) Specify Use: _____

B) Number of shifts (if any): _____

C) Number of employees: _____
(If shifts are proposed, list number of employees per shift)

E) Number of work bays (if automobile repair): _____

F) Days/Hours of operation: _____

XV. EDUCATIONAL/INSTITUTIONAL/RECREATIONAL PROPOSALS (e.g., Museums, Theatres, Conference Centers, Hotels, Motels, Hospitals, Nursing Homes, Assisted Living Facilities, Nursery Schools, Private Schools, Day Care Centers, Places of Worship, Marinas, Membership Clubs, etc.)

A) Specify: _____

B) Number of shifts (if any): _____

C) Number of employees: _____
(If shifts are proposed, list number of employees per shift)

D) Number of beds (hospitals, nursing homes, etc): _____

E) Number of seats in largest assembly space: _____

F) Number of classrooms (schools): _____

G) Number of rental units (hotels, motels, etc.) _____

H) Number of boat slips/courts (e.g., tennis, handball, etc.), alleys: _____

I) Days/Hours of Operation: _____

XVI. PROPOSALS NOT MENTIONED ABOVE (Please be specific):

_____

_____

_____

_____

_____

XVII. APPLICANT CERTIFICATION

I, Simon Abikhzer, certify that the this application has addressed the objectives outlined in the Zoning Ordinance with consideration given to the public health, safety and welfare; the comfort and convenience of the public in general or the residents or users of the proposed development and of the immediate neighborhood.

The applicant certifies that all information contained herein is accurate and complete as of the date of this application.

_____ 10/24/25

Signature of Applicant Date

Revised January 2025: Previous Editions Obsolete

RECEIVED
JAN 2 1 2026
By

City of Poughkeepsie
Waterfront Assessment Form (WAF)

A. INSTRUCTIONS

1. Applicants, or, in the case of direct actions, City agencies shall complete this Waterfront Assessment Form for proposed actions which are subject to the LWRP Consistency Review Law. This assessment is intended to supplement other information used by a City agency in making a determination of consistency with the policy standards set forth in the LWRP Consistency Review Law.

2. Before answering the questions in Section C, the preparer of this form should review the policies and policy explanations contained in the City of Poughkeepsie Local Waterfront Revitalization Program (LWRP), a copy of which is on file in the offices of the City Clerk and posted on the city's website. A proposed action should be evaluated as to its beneficial and adverse effects upon the Waterfront Revitalization Area (WRA) and its consistency with the policy standards.

3. If any question in Section C on this form is answered "yes", the proposed action may affect the achievement of the LWRP policy standards contained in the Consistency Review Law. Thus, the action should be analyzed in more detail and, if necessary, modified prior to making a determination that is consistent with the LWRP policy standards. If an action cannot be certified as consistent with the LWRP policy standards and conditions, it shall not be undertaken.

B. DESCRIPTION OF SITE AND PROPOSED ACTION

1 Describe nature and extent of action:

The proposed construction of a 63-apartment unit clustered multifamily development within two buildings with two accesses off Milton Street.

2. Type of City agency action (check appropriate response):

a. Directly undertaken (e.g. construction, planning activity, agency regulation, land transaction)

b. Financial assistance (e.g. grant, loan, subsidy)

c. Permit, approval, license, certification

City of Poughkeepsie Common Council - Rezoning from RNA to RND;

City of Poughkeepsie Planning Board - Site Plan Approval;

City Engineering Dept. - Curb Cut approval; City Zoning Administrator - Floodplain development

d. Agency undertaking action:

3. If an application for the proposed action has been filed with a City, the following information shall be provided:

a. Name of applicant

Maselo Realty, LLC (Simon Abikhzer)

b. Mailing address:

18 Eastview Road

Monsey, NY 10952

c. Telephone number:

(845) 341-7395

d. Property tax number:

131300-6162-73-623227

e. Application number, if any:

4. Will the action be directly undertaken, require funding, or approval by a State or federal agency?

Yes X No ____

If yes, which State or federal agency? NYS Department of Environmental Conservation: GP-0-25-001,

1. Location of action (Street or Site Description and nearest intersection):

Milton Street, City of Poughkeepsie, New York

6. Size of site (acres): 8.713 acres

7. Amount (acres) of site to be disturbed: 5.26 acres

8. Present land use: Undeveloped

9. Present zoning classification: Residential Neighborhood A (RNA)

10. Describe any unique or unusual landforms on the project site (i.e. bluffs, wetlands, other geological formations): The project site consists of vacant wooded land. The surficial geology of the site features a bedrock outcrop which is proposed to be removed to accommodate all construction (as shown on the concept plan). Fallkill Creek runs along the western property line and within the property for approximately 200 linear feet. There are approximately 0.788 acres of wetland (associated with the Fallkill Creek) located along the western site boundary, characterized as forested floodplain. No significant adverse impacts to wetlands or to the NYSDEC Fallkill Creek will occur as part of the proposed action.

11. Percentage of site that contains slopes of 15% or greater: Approximately 33% of site

12. Streams, lakes, ponds or wetlands existing within or continuous to the project area?

(a) Name Fallkill Creek runs along the western property line and within the property

(b) Size (in acres) for approximately 200 linear feet. There are approximately 0.788 acres of wetland (associated with the Fallkill Creek) located along the western site boundary, characterized as forested floodplain.

13. Is the property serviced by public water? Yes X No ____

14. Is the property serviced by public sewer? Yes X No ____

C. **WATERFRONT ASSESSMENT** (Check either "Yes" or "No" for each of the following questions). If the answer to any question above is yes, please explain in Section D any measures which will be undertaken to mitigate any adverse effects.

		YES	NO
1.	Will the proposed action be located in, or contiguous to, or have a potentially adverse effect upon any of the resource areas found within the waterfront area as identified in the LWRP?	___	X
(a)	Significant fish or wildlife habitats?	___	X
(b)	Scenic resources of local or State-wide significance?	___	X
(c)	Important agricultural lands?	___	X
(d)	Natural protective features in a coastal erosion hazard area?	___	X
2.	Will the proposed action have a significant effect upon:		
(a)	Scenic quality of the waterfront environment?	___	X
(b)	Development of future or existing water-dependent uses?	___	X
(c)	Operation of the State's major ports?	___	X
(d)	Land or water uses within a small harbor area?	___	X
(e)	Designated State or federal freshwater wetlands?	___	X
(f)	Commercial or recreational use of fish and wildlife resources?	___	X
(g)	Existing or potential public recreation opportunities?	___	X
(h)	Structures, sites or districts of historic, archaeological or cultural significance to the City, State or nation?	___	X
(i)	Stability of the shoreline?	___	X
(j)	Surface or groundwater quality?	___	X

3. Will the proposed action involve or result in any of the following:

(a)	Physical alteration of land along the shoreline, underwater land or surface waters?	___	X
(b)	Physical alteration of two (2) acres or more of land located elsewhere in the waterfront area?	X	___
(c)	Expansion of existing public services or infrastructure in undeveloped or low-density areas of the waterfront area?	___	X
(d)	Siting or construction of an energy generation facility not subject to Article VII or VIII of the Public Service Law?	___	X
(e)	Mining, excavation, filling or dredging in surface waters?	___	X
(f)	Reduction of existing or potential public access to, or along, the shoreline?	___	X
(g)	Sale or change in use of publicly-owned lands located on the shoreline or underwater?	___	X
(h)	Development within a designated flood or erosion hazard area?	X	___
(i)	Development on a beach, dune, bluff or other natural feature that provides protection against flooding or erosion?	___	X
(j)	Construction or reconstruction of erosion protective structures?	___	X
(k)	Diminished or degraded surface or groundwater quantity and/or quality?	___	X
(l)	Removal of ground cover from the site?	X	___

4. PROJECT		YES	NO
(a)	If a project is to be located adjacent to shore:		
(1)	Does the project require a waterfront location?	___	X
(2)	Will water-related recreation be provided?	___	X
(3)	Will public access to the foreshore be provided?	X	___
(4)	Will it eliminate or replace a water-dependent use?	___	X
(5)	Will it eliminate or replace a recreational or maritime use or resource?	___	X
(b)	Is the project site presently used by the community neighborhood as an open space or recreation area?	___	X
(c)	Will the project protect, maintain and/or increase the level and types or public access to water-related recreation resources or facilities?	X	___

(d)	Does the project presently offer or include scenic views or vistas that are known to be important to the community?	___	X
(e)	Is the project site presently used for commercial or recreational fishing or fish processing?	___	X
(f)	Will the surface area of any local creek corridors or wetland areas be increased or decreased by the proposal?	___	X
(g)	Is the project located in a flood prone area?	X	___
(h)	Is the project located in an area of high coastal erosion?	___	X
(i)	Will any mature forest (over 100 years old) or other locally important vegetation be removed by the project?	___	X
(j)	Do essential public services or facilities presently exist at or near the site?	X	___
(k)	Will the project involve surface or subsurface liquid waste disposal?	___	X
(l)	Will the project involve transport, storage, treatment or disposal of solid waste or hazardous materials?	___	X
(m)	Will the project involve shipment or storage of petroleum products?	___	X
(n)	Will the project involve the discharge of toxics, hazardous substances or other wastes or pollutants into coastal waters?	___	X
(o)	Will the project involve or change existing ice management practices?	___	X
(n)	Will the project alter drainage flow, patterns or surface water runoff on or from the site?	X	___
(p)	Will best management practices be utilized to control storm water runoff into waterfront waters?	X	___
(q)	Will the project cause emissions that would exceed federal or State air quality standards or generate significant amounts of nitrates or sulfates?	___	X
(r)	Will the project affect any area designated as a tidal or freshwater wetland?	___	X
(s)	Will the project utilize or affect the quality or quantity of sole source or surface water supplies?	___	X

D. **REMARKS OR ADDITIONAL INFORMATION TO SUPPORT OR DESCRIBE ANY ITEM(S) CHECKED "YES"** (Add any additional sheets necessary)

3(b), 4(n), and 4(p): Approximately 5.26 acres of disturbance are proposed. A SWPPP will be prepared in conformance with the most current New York State Stormwater Management Design Manual and New York State Standards and Specifications for Erosion and Sediment Control. The Grading and Utility Plan (C140) shows the stormwater being conveyed via swales and subsurface piping to an on-site stormwater bioretention basin. The treated water will outflow to the Fallkill Creek. Therefore, the proposed project is not expected to result in any adverse impacts in regard to stormwater.
3(l): Activities during construction will include grading and earth-moving, building construction, addition of electric lights, increasing impervious surface area and altering site drainage will occur. As mentioned, a SWPPP will be prepared.
4(a) and 4(c): A public wooded path will be provided.
3(h) and 4(g): The property is identified in the NRI Report as one of the last remaining areas within the City of Poughkeepsie where the Fall Kill is not channelized and is permitted to flood naturally. Due to the lack of channelization, this area floods readily without harming buildings or roads. Approximately one-third of the property falls within the City's flood area boundary. According to FEMA Community Panel Number 36027C0358E information (effective 5/12/2012), an area abutting the Fallkill Creek is located within Zone AE (100-year floodplain) or special flood hazard area. The floodplain area is identified on the site plan. Some grading (no construction) may occur within the 100-year floodplain; therefore, a floodplain development permit will be sought. There will be a substantial buffer and distance between the proposed development and the Fall Kill and the implementation of the SWPPP will ensure that no significant adverse impacts to the floodplain will occur.
4(j): Municipal water and sewer service currently serve the project site.

If you require assistance or further information in order to complete this form, please contact the City Planning Department.

Please submit completed form, along with one copy of a site/sketch plan to:

City of Poughkeepsie
Building, Planning, and Zoning Department
City Hall-2nd Floor
62 Civic Center Plaza
Poughkeepsie, NY 12601

Preparer's Name (Please print) : Caren LoBrutto, LaBella Associates

Affiliation: Agent for Project Applicant

Telephone Number: (845) 486-1458

Date: January 14, 2026

CITY OF POUGHKEEPSIE
PLANNING DEPARTMENT
JANUARY 27, 2026

Milton Street Lot # 6162-73-623227

Referral from the Common Council for SEQRA review of an application for the rezoning of lot # 6162-73-623227 from Residential Neighborhood A to Residential Neighborhood D, and the construction of two multifamily buildings including 63 units between them. Application for site plan review for new construction of two multi family developments.

Project Description

An application for rezoning has been submitted to the Common Council. SEQRA review of the application was referred to the Planning Board by the Common Council. A site plan application for the same project has been made to the planning board.

The project is classified as an Unlisted Action under SEQRA.

Recommendations

- Consider traffic impacts on Milton Street, Fitchett Street and West Arnold Road, unstriped local roads.
- Project reviewed by the Planning Board in 2021.
- Applicant requesting conversion to RND zoning, permitting multifamily development and a maximum height of 4 stories or 55 feet. Restaurants and retail permitted by special permit.
- Process for the application is;
    - SEQRA declaration for rezoning and development
    - Further consideration of rezoning action by the Common Council
    - Resolution on the site plan application
- Project previously received a negative declaration for a 63 unit multifamily development and rezoning of the property to the Planned Residential Development district.
- Staff has recommended project apply for RND instead of PRD based on the variances required to receive a PRD rezoning in 2021.
- Project received an architectural escrow and a design review letter in 2021. Escrow account is open.

Project History

Project referred to Planning Board for SEQRA review 12/8/2025
First Appearance in front of the Planning Board 1/27/2026

Documents Entered into Record

Date	Description	Author	Comments
10/24/25	Rezoning Application	Maselo Realty, LLC (Simon Abikhzer)	
10/28/25	Zoning Map	LaBella Associates	Project Area Zoning Map
10/28/25	Site Plan	LaBella Associates	
10/28/25	FEAF	LaBella Associates	Full EAF Part 1 and NRI
11/14/25	Memorandum	Europa McGovern	Re: Milton Street Application for Rezoning
12/8/25	Resolution	Common Council	Referral of SEQRA review for Rezoning
1/20/2021	Negative Declaration	Planning Board	Neg dec of 2021 site plan and rezoning to PRD

Motions & Resolutions:
With Regard to the City's file number #PD-2025-140

The Planning Board declares lead agency pursuant to SEQRA.
Motion:
Second:
Vote:

APPLICATION TO THE PLANNING BOARD
CITY OF POUGHKEEPSIE, NEW YORK

Application for Site Plan, Special Permit & Facade Approval

OFFICE USE ONLY

CODE: PLSF

ID #_____

FEE: $ 1,680.00
Total, from:
$500, plus
$ 0.00
($150 per 1000 square feet of floor area), plus
$ 1,680
($35 per number of required parking spaces), plus
$ 0.00
($500 for special permit, if applicable)

I. PROPERTY ADDRESS: 49 Civic Center Plaza / 85 Civic Center Plaza

II. PROPERTY OWNER: Journal Plaza LLC / Page Park Associates LLC
ADDRESS: PO Box 792
Poughkeepsie
NY 12602 (state and zip code)
PHONE NUMBER: 845.594.1055 (include area code)

III. NAME OF APPLICANT: Same as Owner
ADDRESS: Consultant: KARC Planning, Kelly Libolt
PO Box 924
Poughkeepsie, NY 12601 (state and zip code)
PHONE NUMBER: 845.594.1055 (include area code)
EMAIL ADDRESS: kelly@karcpc.com; copy natalie@karcpc.com

(If applicant is NOT the owner, proof of owner's consent to the application MUST be provided.)

IV. CONSULTANT: LRC Group
ADDRESS: 85 Civic Center Plaza
Suite 103
Poughkeepsie, NY 12601 (state and zip code)
PHONE NUMBER: 845.243.2880 (include area code)
EMAIL ADDRESS: _____

V. PROPOSED USE or FAÇADE CHANGE (Summarize proposed use or uses): Reconfiguration of existing parking lot, existing 4,774 (+/-) building will remain.

VI. ZONING DISTRICT: PID-B

(Proceed to XVII for special permit & façade approval only)

Revised January 2025: Previous Editions Obsolete

PROJECT INFORMATION

New construction: X (yes) _____ (no)

Change of use: _____ (yes) X (no)

Expansion/addition: _____ (yes) X (no)

Alteration: _____ (yes) X (no)

Cost of Construction: $ 175,000

LOT AND BULK INFORMATION: Combined 49 and 85 Civic Center Plaza

Lot area: 3.608 (acres) 157,164.48 (square feet)

Building Footprint: N/A (proposed square feet for new construction)

N/A (existing square feet for change of use/expansion)

N/A (additional proposed square feet for expansion)

31,544.5 (total building footprint, square feet)

Lot Coverage: 39.9% (percentage, building coverage only)

Gross Floor Area: N/A (proposed square feet for new construction)

N/A (existing square feet for change of use/expansion)

N/A (additional proposed square feet for expansion)

111,582 (total gross floor area, square feet)

Building Height: N/A (stories) _____ (feet)

Floor Area Ratio: N/A (ratio of gross floor area divided by lot area)

VIII. PROJECT PARKING INFORMATION

A) Number of Off-Street Parking Spaces required: 192

B) Number of Off-Street Parking Spaces provided: 245

C) Waiver Requested: _____ (Yes) X (No)

Is municipal parking available within 600 feet? X (Yes) _____ (No)

If yes, name all such municipal facilities: _____

City Hall Parking Garage (across Civic Center Plaza)

Financial Plaza Parking Deck (500 feet down Market Street)

(If a waiver is requested based on proximity to municipal facilities, a written request for such waiver, addressed to the City Planning Staff and the Chairman of the Planning Board, must be submitted with the application.)

If a private parking facility is to be utilized, is such facility within 600 feet?

__X__ (Yes) (No)

If yes, provide the address of the facility, name of the property owner, number of spaces in the lot, number of spaces available for lease, and length of lease. Attach copy of lease. Additional information may be required by the Planning Board): Evening/shared parking is available at 85 Civic Center Plaza; Owner: Page Park Associates

IX. RESIDENTIAL PROPOSALS N/A

A) Type of Development: _____
(Townhouse, condominium, multiple residence rental, etc.)

B) Unit Breakdown:

Number of efficiency or "studio" units: _____

Number of one (1) bedroom units: _____

Number of two (2) bedroom unit's _____

Number with three or more bedrooms: _____

Total number of units: _____

C) Is funding public?_____Yes_____No

If yes, describe funding source: _____

X. OFFICE PROPOSALS (____Medical/Dental_____Professional_____Business) N/A

A) Number of Employees: _____

B) Number of doctors/dentists/medical practitioners: _____

C) Days/Hours of Operation: _____

XI. SERVICE BUSINESS PROPOSALS N/A

A) Specify Business: _____
(e.g., laundromat, drycleaner, beauty parlor, travel agency, banks)

B) Number of Employees: _____

C) Number of Washing Machines (for laundromat): _____

D) Days/Hours of Operation: _____

XII. MERCANTILE PROPOSALS (Retail_____Wholesale_____) N/A

A) Type of Mercantile (specify): _____

B) Number of Employees: _____

C) Days/Hours of Operation: _____

XIII. STANDARD RESTAURANT/FAST FOOD RESTAURANT/COFFEE SHOP/DONUT SHOP/NIGHTCLUB/DISCOTHEQUE/BAR PROPOSALS N/A

A) Specify Use: _____

B) Number of seats (excluding bar stools and outdoor seating):_____

C) Meals served (i.e., breakfast, lunch, dinner): _____

D) Type of Menu: _____

E) Days/Hours of Operation: _____

F) Entertainment (live and/or recorded):_____

G) Will the restaurant contain a bar/lounge?: _____Yes_____No

H) If yes, how many seats at the bar? _____

I) Is a drive-through window proposed? _____

J) Is a walk-up window proposed? _____

K) Is an outdoor seating area proposed? _____

L) If yes, how many seats are proposed? _____

M) If yes, is outdoor cooking proposed? _____

XIV. INDUSTRIAL/COMMERCIAL PROPOSALS (Automobile repair, taxi, motor vehicle sales, warehouse, manufacturing, animal hospital, research facilities, etc.) N/A

A) Specify Use: _____

B) Number of shifts (if any): _____

C) Number of employees: _____
(If shifts are proposed, list number of employees per shift)

E) Number of work bays (if automobile repair): _____

F) Days/Hours of operation: _____

XV. EDUCATIONAL/INSTITUTIONAL/RECREATIONAL PROPOSALS (e.g., Museums, Theatres, Conference Centers, Hotels, Motels, Hospitals, Nursing Homes, Assisted Living Facilities, Nursery Schools, Private Schools, Day Care Centers, Places of Worship, Marinas, Membership Clubs, etc.) N/A

A) Specify: _____

B) Number of shifts (if any): _____

C) Number of employees: _____
(If shifts are proposed, list number of employees per shift)

D) Number of beds (hospitals, nursing homes, etc): _____

E) Number of seats in largest assembly space: _____

F) Number of classrooms (schools): _____

G) Number of rental units (hotels, motels, etc.) _____

H) Number of boat slips/courts (e.g., tennis, handball, etc.), alleys: _____

I) Days/Hours of Operation: _____

XVI. PROPOSALS NOT MENTIONED ABOVE (Please be specific):

The proposed parking lot will connect to the existing parking lot at 85 Civic Center Plaza.

XVII. APPLICANT CERTIFICATION

I, Kelly Libolt, certify that the this application has addressed the objectives outlined in the Zoning Ordinance with consideration given to the public health, safety and welfare; the comfort and convenience of the public in general or the residents or users of the proposed development and of the immediate neighborhood.

The applicant certifies that all information contained herein is accurate and complete as of the date of this application.

KLibolt

Signature of Applicant

11/19/2025

Date

KARC
PLANNING CONSULTANTS, INC.

January 13, 2026

Ms. Lori Garcia
Planning Board Administrative Assistant
City of Poughkeepsie
62 Civic Center Plaza
Poughkeepsie, NY 12601

Chairwoman Anne Saylor
City of Poughkeepsie Planning Board
62 Civic Center Plaza
Poughkeepsie, NY 12601

Re: 49 and 85 Civic Center Plaza
Parcel Number 131300-6162-69-065177 (49 Civic Center Plaza)
Parcel Number 131300-6162-69-090193 (85 Civic Center Plaza)
Site Plan Application

Dear Ms. Garcia and Chairwoman Saylor:

As you are aware, the Applicant is seeking to develop a reconfigured parking lot at 49 Civic Center Plaza which will connect to the existing parking lot at 85 Civic Center Plaza and serve as accessory parking for the Poughkeepsie Journal Building. Additionally, the proposed site plan incorporates landscaping and pedestrian improvements which will enhance the site's visual appeal and improve vehicle and pedestrian flow in and around the lot. The Applicant is seeking Site Plan Approval from the Planning Board and asks the Board to reaffirm the SEQRA Negative Declaration that was issued for a similar proposal on this site in May 2020 (see attached).

On December 11, 2025, the Applicant received email communication from the City of Poughkeepsie indicating the need for an Area Variance Application due to zoning deficiencies related to the maximum parking requirements and rear parking setback requirements. The Applicant submitted an Area Variance Application and is attending the ZBA meeting on January 13, 2026.

On December 17, 2025, the Applicant attended the City of Poughkeepsie Planning Board meeting for an initial presentation of this Site Plan Application. At that time, the Planning Board provided comments related to the proposed landscaping on the property. In particular, the Board requested that the Applicant add landscaping to front of the proposed grass lawns along Civic Center Plaza to enliven this public-facing part of the Site.

To satisfy this request and to further enhance the site's appeal, the Applicant is proposing to add a row of 2-gallon Boxwood Hedges behind a decorative fence along the street frontage of the proposed grass lawns. Moreover, the Applicant is proposing to plant junipers, yews, a magnolia tree, and other seasonal flowers to match those currently planted at 85 Civic Center Plaza. These alterations will give both lots a unified look and feel. Details of these landscaping improvements can be found in the attached Site Plan Set prepared by LRC Engineering & Surveying dated January 9, 2026.

The SEQRA Negative Declaration that the Planning Board issued in May of 2020 was in response to a proposed four (4) story structure that included commercial/retail on the first floor and three (3) floors of residential above. Given that the Site Plan Application currently before the Planning Board is significantly less intense – in terms of development and environmental impact – than the proposed mixed-use structure, the Applicant is asking that the Board reaffirm the previously issued Negative Declaration. The table below compares key SEQRA factors between the two proposals to assist the Board in its decision making.

	Previous Approval 2020	Current Proposal	Delta
Building Footprint	9,823 SF	4,500 SF (existing)	-5,323 SF
Gross Floor Area	25,792 SF	4,500 SF	-21,292 SF
Building Height	4 stories	1 story (existing)	-3 stories
Parking Spaces	57	47	-10 spaces
Lot Coverage (Building Coverage only)	83.5%	13.3%	-70.2%
Water & Sewer	New water/wastewater connections needed	None needed	N/A

The Dutchess County Department of Planning & Development issued a memorandum dated December 31, 2025 to provide comments and feedback on the proposed parking lot reconfiguration. The County's

comments included suggestions to add a pedestrian crosswalk across the Site's main entrance along Civic Center Plaza and to increase the number of bicycle parking spaces. As indicated in the attached Site Plan Set, the Applicant is incorporating a crosswalk at the suggested location to facilitate pedestrian activity across the site and adding fifteen (15) additional bicycle parking spaces to bring the total to twenty (20) spaces.

I have enclosed the following documents for your review.

1) Six (6) copies of cover letter prepared by KARC Planning Consultants dated January 13, 2026
2) Six (6) 18x24' copies of the Site Plan set prepared by LRC Group dated January 9, 2026
3) Six (6) copies of the City of Poughkeepsie SEQR Negative Declaration dated May 20, 2020

We respectfully request that this matter be placed on the Tuesday, January 27, 2026 Planning Board meeting agenda for continued review.

We thank you for your time and consideration.

Sincerely,

Kelly Libolt

SITE PLAN SUBMISSION SET

FOR

JOURNAL SQUARE

49 & 85 CIVIC CENTER PLAZA

CITY OF POUGHKEEPSIE, DUTCHESS COUNTY, NEW YORK

TAX MAP(S) ID# 6162-69-065177 &
6162-69-090193

REVISED: JANUARY 09, 2026



VICINITY MAP

SCALE: 1"=200'

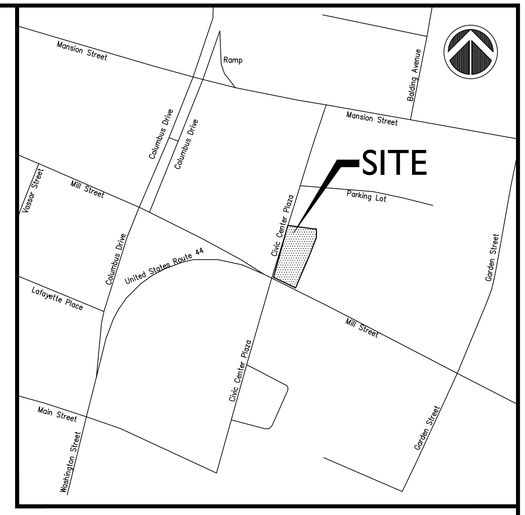

LOCATION MAP

SCALE: 1"=1,000'

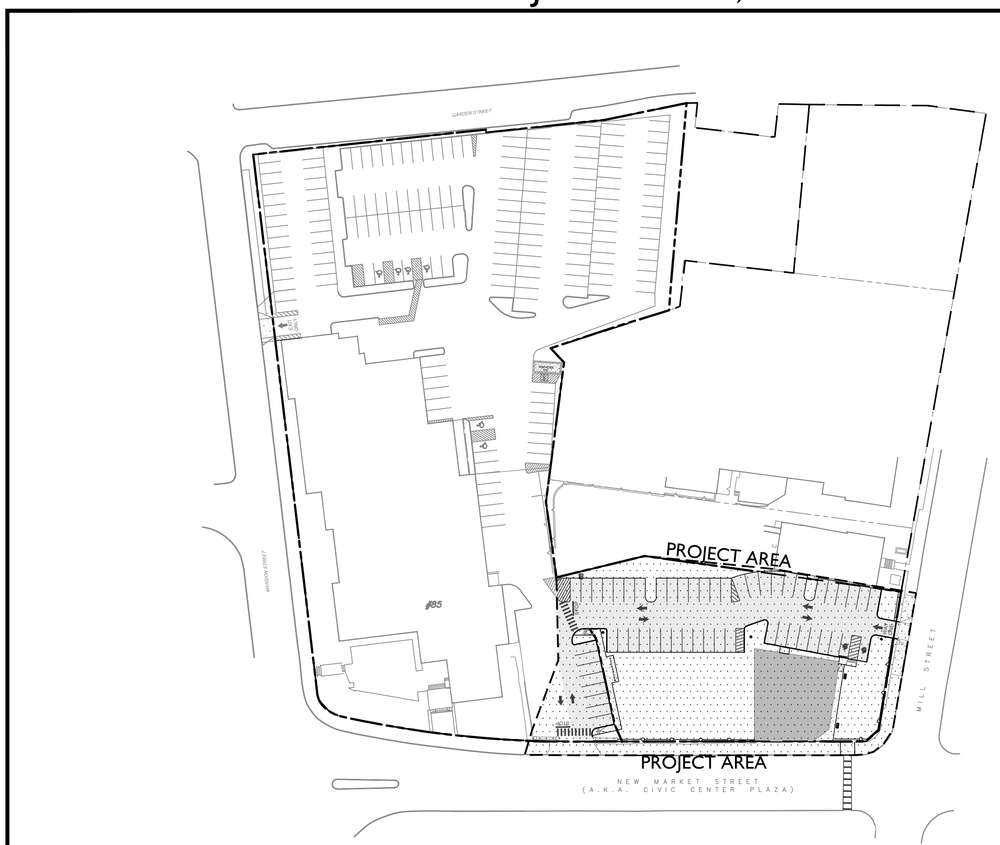

OVERALL SITE PLAN

SCALE: 1"=60'

INDEX OF DRAWINGS

CV-1	COVER SHEET
EX-1	EXISTING CONDITIONS
SP-1	SITE PLAN
SG-1	SITE GRADING / DRAINAGE & EROSION CONTROL PLAN
LL-1	SITE LANDSCAPE / LIGHTING PLAN
DN-1	PROJECT DETAILS
DN-2	PROJECT DETAILS
DN-3	PROJECT DETAILS

CIVIL ENGINEER:

- Civil Engineering
- Land Surveying
- Landscape Architecture
- Land Planning
- Laser Scanning & BIM
- Subsurface Utility Engineering

Land Resource Consultants
Engineering & Surveying, LLC
Loureiro NY, P.C.

85 Civic Center Plaza, Suite 204
Poughkeepsie NY 12601
(845) 243-2880

160 West Street, Suite E
Cromwell, CT 06416
(860) 635-2877

www.lrcconsult.com

STATE OF NEW YORK
RODNEY E MORRISON
074194
LICENSED PROFESSIONAL ENGINEER

Rodney Morrison P.E. #074194

PLANNER:

KARC
PLANNING CONSULTANTS, INC.
PO BOX 924
POUGHKEEPSIE, NY 12601
845-594-1055

OWNER / APPLICANT:

49 CIVIC CENTER PLAZA-JOURNAL PLAZA LLC
85 CIVIC CENTER PLAZA-PAGE PARK ASSOCIATES LLC
PO BOX 792
POUGHKEEPSIE, NY 12602

CITY PLANNING BOARD
CITY OF POUGHKEEPSIE, NEW YORK
SITE PLAN APPROVAL
FILE NO:
PROJECT NAME:
PROJECT LOCATION:
APPLICANT:
OFFICIALLY APPROVED AT THE PLANNING BOARD
MEETING HELD THE _____DAY OF_____2025_____
PLANNING CHAIR:
DESIGNEE:
DATE SIGNED:
CONDITION(S)

_____
FIRE CHIEF

_____
POLICE CHIEF

_____
BUILDING INSPECTOR

_____
CITY ENGINEER

_____
COMMISSIONER OF PUBLIC WORKS

REVISION NOTE #1: 2026-01-09
ORIGINALLY SUBMITTED: 2025-11-19

JOURNAL SQUARE
49-85 CIVIC CENTER PLAZA
CITY OF POUGHKEEPSIE

COVER SHEET

Drawing No.

CV

SHEET 1 OF 8

K:\JOBS\Jobs 2019\19-2428-Page Park 47-49 Civic Center\DWG\CV19242601.dwg 1/9/2026 1:11 PM SCurran



Key Map
Scale: 1"=200'

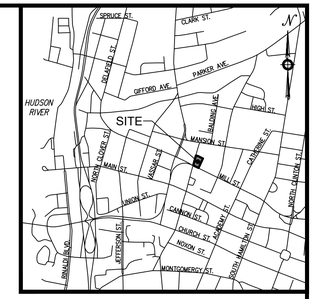

Vicinity Map
Scale: 1"=1,500'

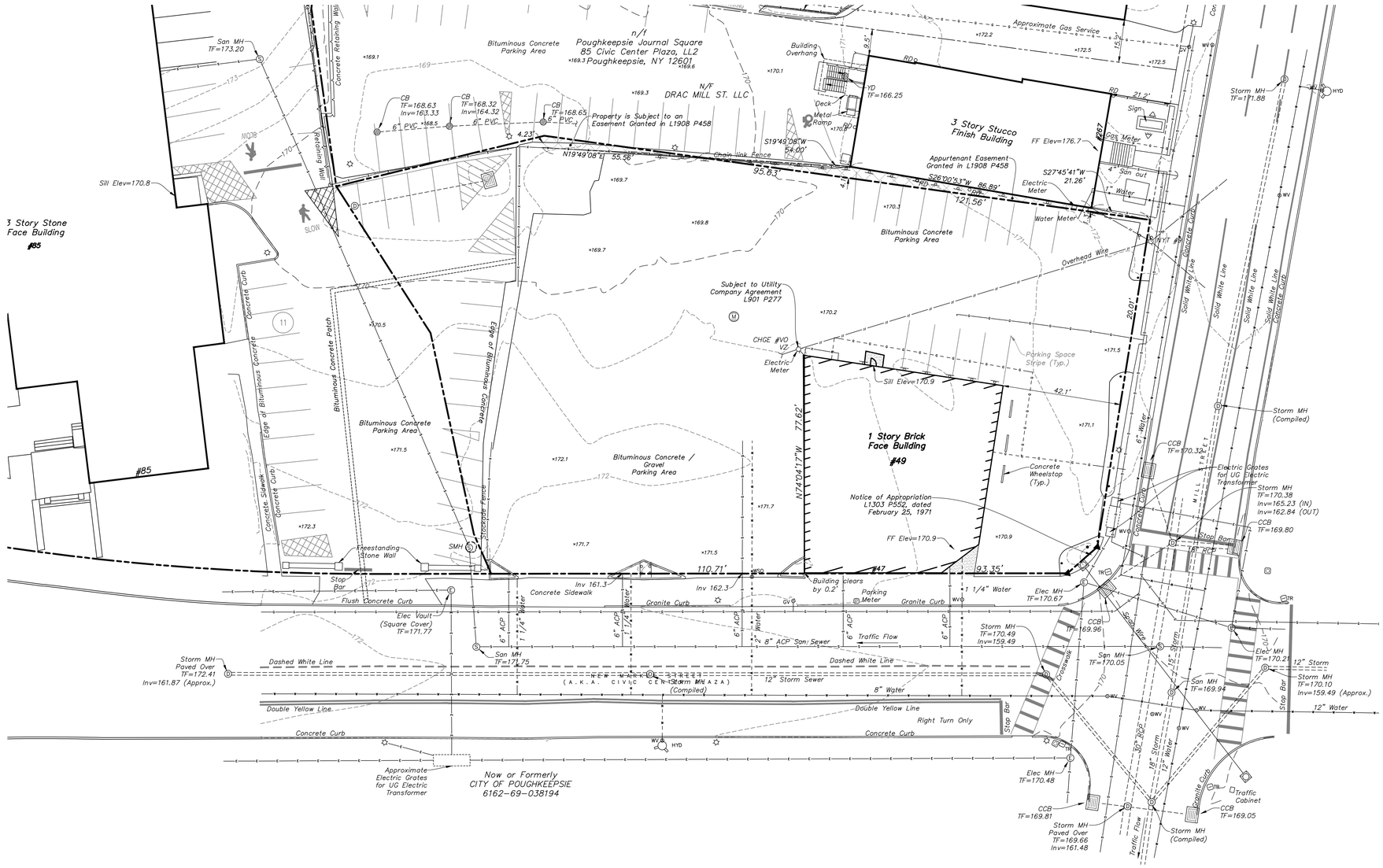

Map Notes

1. *Unauthorized alteration or addition to a survey map bearing a licensed land surveyor's seal is a violation of section 7209, sub-division 2, of the New York State Education Law.*
2. *Only copies from the original of this survey marked with an original of the land surveyor's seal shall be considered to be a true copy.*
3. *The above certification shall run only to the person for whom the survey is prepared , and on his behalf to the title company, governmental agency and lending institution. Certifications are not transferable to additional institutions or subsequent owners.*
4. *North Arrow and Bearings are referenced to the North American Datum (NAD) of 1983 projected onto the New York East State Plane Coordinate System based on GPS observations made on April 22, 2019 utilizing the Keystone KeyNetGPS VRS GPS network.*
5. *Contours and elevations are referenced to the North American Vertical Datum (NAVD) of 1988 based on GPS observations made on April 22, 2019 utilizing the Keystone KeyNetGPS VRS GPS network.*
6. *Field survey was completed on May 6, 2019.*
7. *Reference is made to the following maps:*
   - A. *"Map of Survey, Platinum Holdings Inc., City of Poughkeepsie, Dutchess County, N.Y.", scale 1"=20', dated December 26, 2005, prepared by Robert L. Campbell.*
   - B. *"Map of Survey for Platinum Holdings Inc., City of Poughkeepsie, Dutchess County, New York", scale 1"=20', dated December 30, 2013, prepared by Robert L. Campbell.*
   - C. *"Survey Map Prepared for Page Park Associates, City of Poughkeepsie, County of Dutchess, State of New York", scale 1"=30', dated September 15, 1988, revised through August 26, 2009.*
   - D. *"Subdivision Plat of Lands of South Clover Properties Inc. & 289 Mill Street Realty, Corporation, City of Poughkeepsie, Dutchess County, N.Y.", scale 1"=20', dated July 31, 2003, revised through August 25, 2005, prepared by Berger Engineering & Surveying.*
   - E. *"Property to b y Acquired by Poughkeepsie Newspapers Inc. in the City of Poughkeepsie, Dutchess County, New York", scale 1"=10', dated September 13, 1965, prepared by Robert A. Monell, map on file in the Dutchess County Clerk's Office as map #3378.*
   - F. *New York State Department of Transportation Description and map for the Acquisition of Property, Poughkeepsie Arterial East-West-Route, Map 265 parcel No. 268.*
8. *Reference is made to certificate for Title Insurance prepared by Chicago Title Insurance Company, Title #RPATS-5578, effective date: April 2, 2019.*
9. *Property is located in Zone "X" as depicted on Flood Insurance Rate Map (FIRM) Panel 0358E, Dutchess County, New York, City of Poughkeepsie, community number 360222, Town of Poughkeepsie, community number 316642 map number 36027C0358E, effective date: May 2, 2012.*
10. *The subsurface utilities depicted hereon conform to the following Utility Quality Levels, as defined by the American Society of Civil Engineers (ASCE) in Document C/ASCE 38-02 titled "Standard Guidelines for the Collection and Depiction of Existing Subsurface Utility Data":*
    - *Sanitary Sewer: QLC and QLD*
    - *Storm Sewer: QLC*
    - *Water: QLC*
    - *Natural Gas: QLC and QLD*
    - *Electric: QLC and QLD*

The subsurface utilities were compiled from parol evidence, record drawings, and surficial evidence located during the field survey. The Surveyor has not physically exposed the subsurface utilities, and makes no guarantee that the subsurface utilities depicted hereon comprise all such utilities within the surveyed area, either in service or abandoned. The Surveyor further does not warrant or guarantee that the subsurface utilities are in the exact location depicted, though they have been plotted, in accordance with the standard of care, from information available.

The contractor is required to utilize the local utility one call system prior to excavation for the purpose of verifying the subsurface utilities in the area.

Certification

I hereby declare this map to be prepared in accordance with the Code of Practice of the New York State Association of Land Surveyor's, adopted October, 1966 and revised through January 28, 1993.

John Wagenblatt, L.S. Lic. #050547

STATE OF NEW YORK JOHN WAGENBLATT 050547 LICENSED LAND SURVEYOR

Legend

Property Line	■ Monument	Catch Basin
Easement Line	● Iron Pin, Pipe, Rebar, Drill Hole	Curbless Catch Basin
200 Index Contour	○ Calculated Property Corner	Deciduous Tree
Intermediate Contour	▲ NYSDOT Monument Found	MW Monitor Well
Retaining Wall	Single Post Sign	Concrete Surface
Fence	• Bollard	Easement Area
Storm Sewer	×234.0 Existing Spot Grade	
Sanitary Sewer	Guy Wire	
Water Main	Utility Pole	
Gas Main	WV Water Valve	
Electric Line	HYD Hydrant	
Overhead Wire	GV Gas Valve	
Gas Service Line	Drainage Manhole	
Water Service Line	Sanitary Manhole	
	Electric Manhole	
	Paved-Over Manhole	
	Manhole, Utility Type Unknown	
	Lamp Post	
	Parking Meter	
	Traffic Span Pole	
	Pedestrian Crossing Pole	
	Double Post Sign	
	TR Traffic Handhole	

GRAPHIC SCALE
20 0 10 20 40 80
(FEET)
1 inch = 20 ft.

Deed Reference
02-2006-69

Parcel References
061166 & 065177

#85 Civic Center Plaza Total Parcel Area
121,968 S.F.
2.80 Acres

#49 Civic Center Plaza Total Parcel Area
35,196 S.F.
0.808 Acres

No.	Date	Description
1.	2026-01-09	REVISED PER LANDSCAPE COMMENTS

Revisions

LRC Engineering & Surveying
- Civil Engineering
- Land Surveying
- Landscape Architecture
- Land Planning
- Laser Scanning & BIM
- Subsurface Utility Engineering

Land Resource Consultants Engineering & Surveying, LLC
Loureiro NY, P.C.
85 Civic Center Plaza, Suite 204
Poughkeepsie NY 12601
(845) 243-2880

160 West Street, Suite E
Cromwell, CT 06416
(860) 635-2877
www.lrcconsult.com

EXISTING CONDITIONS

JOURNAL SQUARE

49 & 85 CIVIC CENTER PLAZA
CITY OF POUGHKEESPIE
DUTCHESS COUNTY, NEW YORK

Design/Calcs	SMC	CAD File	EX-19-2426.dwg	Sheet No.	EX-1
Drawn	KFC	Project No.	19-2426		SHEET 2 OF 8
Checked	KFC	Date	11-19-2025		
Approved	REM	Scale	1"=20'		

X:\JOBS\Jobs 2019\19-2426-Page Park 47-49 Civic Center\DWG\EX-19-2426.dwg 1/5/2026 3:47 PM SCurran

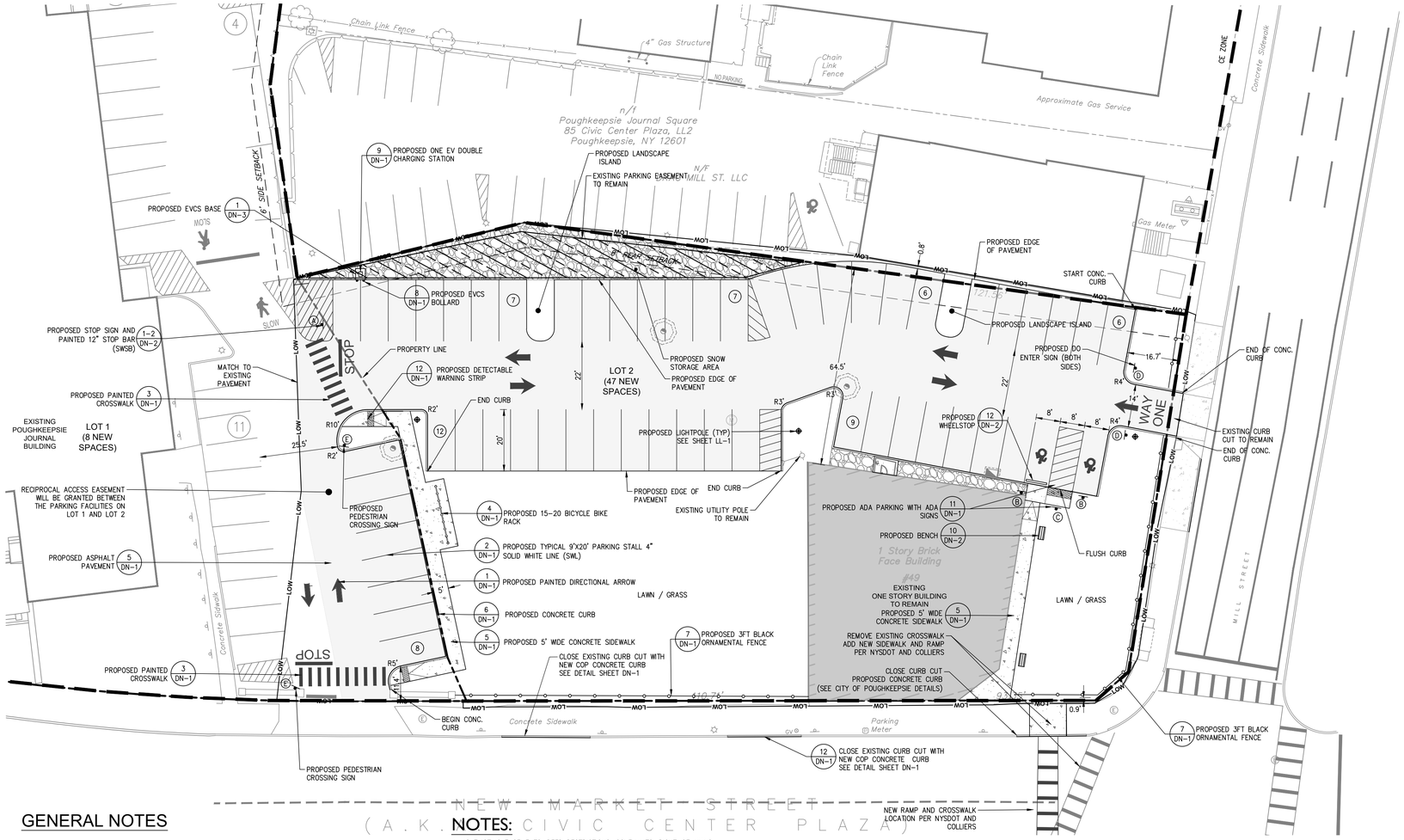

ZONING SUMMARY CHART			
ZONING INFORMATION			
Tax Map Identification	Parcel No. 131300-6162-69-065177		
Zoning District	PID-B		
Proposed Use	Accessory parking area		
ZONING SUMMARY			
ITEM	REQ'D PID-B	Proposed Lot 1	Proposed Lot 2
LOTS & PARKING			
Lot Area and Coverage			
– Lot Area (min)	N/A	2.80 acres	0.808 acres
– Lot Width (min)	N/A	204.06'	236.17'
– Lot coverage (min)	60%*	21.94%	13.3%
– Outdoor activity space (min)	10%**	More than 10% Exist.	40.81%
Parking Location & Access			
– Primary Street Yard (min)	Not permitted	N/A	N/A
– Secondary Street Yard Setback (min)	40 ft	15.87'	16.7'
– Side Yard Setback (min)	20 ft	15.87'	16.7'
– Rear Yard Setback (min)	20 ft	6'	16.7
– Driveway Width (max)	20 ft	20'	14' One Way
BUILDING PLACEMENT			
Primary Structure Setback			
a) Primary Street Setback (min/max)	0 / 15 ft	20'	0'
– Build-to Frontage (min)	80%	18.7%	23.9%
b) Secondary Street Setback (min/max)	0 / 6 ft	0'	16.7'
– Build-to Frontage (min)	80%	54.3%	45.2%
c) Side Setback (min/max)	0 / 11 ft	53'	62.6'
– Abutting a residential lot line	15 ft	N/A	N/A
d) Rear Setback (min)	8 ft	155	32.2'
– Abutting a residential lot line	15 ft	N/A	N/A
BUILDING COMPOSITION			
Height			
a) Base	6 stories / 81 ft	4 stories	1 story
b) Bonus			
– 10% Affordable Units	8 stories / 107 ft	N/A	N/A
– 20% Affordable Units	9 stories / 120 ft	N/A	N/A
c) Minimum	2 stories / 29ft	N/A	N/A
d) Step-back depth after 5 stories (min)	5 ft	N/A	N/A
Width			
e) Primary Street Facing Building Width (max)	225 ft	42.43'	48.6'
Ground Story			
f) Story Height	14 ft	More than 1 Story Greater than 14'	1 Story Less than 14'
Entrance			
g) Distance Between Street-Facing Entrances (max)	50 ft	More than 50'	32.50'
Transparency			
h) Ground Story (min)	50%	Less than 50%	Less than 50%
i) Upper Story (min)	25%	Less than 25%	N/A
* Includes all buildings / structures			
** Minimum outdoor activity is calculated as a percentage of the total lot area. Minimum requirements are waived for lots under 5,000 square feet. Outdoor patios, roof gardens/decks, green roofs, etc. can be counted toward requirements			
Existing non-complying, no change			

GENERAL NOTES

1. ALL CONSTRUCTION SHALL COMPLY WITH CITY OF POUGHKEEPSIE REQUIREMENTS AND SPECIFICATIONS.
2. THE CONTRACTOR IS RESPONSIBLE FOR OBTAINING ALL NECESSARY PERMITS REQUIRED BY GOVERNMENT AGENCIES PRIOR TO CONSTRUCTION. THE CONTRACTOR SHALL POST ALL BONDS, PAY ALL FEES, PROVIDE PROOF OF INSURANCE AND PROVIDE TRAFFIC CONTROL NECESSARY FOR THIS WORK.
3. REFER TO OTHER PLANS AND DETAIL SHEETS FOR ADDITIONAL INFORMATION. THE CONTRACTOR SHALL VERIFY ALL SITE CONDITIONS IN THE FIELD AND CONTACT THE SITE ENGINEER IF THERE ARE ANY QUESTIONS OR CONFLICTS REGARDING THE CONSTRUCTION DOCUMENTS AND/OR FIELD CONDITIONS SO THAT APPROPRIATE REVISIONS CAN BE MADE PRIOR TO BIDDING. ANY CONFLICT BETWEEN DRAWINGS AND THE SPECIFICATIONS SHALL BE CONFIRMED WITH THE LOCAL CONSTRUCTION MANAGER PRIOR TO BIDDING.
4. REFER TO THE DETAIL SHEETS FOR PAVEMENT, CURBING, AND SIDEWALK INFORMATION.
5. ALTERNATIVE METHODS AND PRODUCTS OTHER THAN THOSE SPECIFIED MAY BE USED IF REVIEWED AND APPROVED BY THE SITE ENGINEER, AND THE APPROPRIATE REGULATORY AGENCIES PRIOR TO INSTALLATION.
6. THE CONTRACTOR SHALL RESTORE ANY OF THE FOLLOWING IF THEY ARE NOTED TO REMAIN: UTILITY STRUCTURE, PIPE, UTILITY, PAVEMENT, CURBS, SIDEWALKS, OR LANDSCAPED AREAS DISTURBED DURING CONSTRUCTION TO THEIR ORIGINAL CONDITION OR BETTER TO THE SATISFACTION OF THE CITY OF POUGHKEEPSIE.
7. TRAFFIC CONTROL MEASURES SHALL BE UTILIZED IN ACCORDANCE WITH CITY OF POUGHKEEPSIE AND NYSDOT.
8. PAVEMENT MARKINGS SHALL BE FAST DRYING TYPE IN ACCORDANCE WITH CITY OF POUGHKEEPSIE SPECIFICATIONS.
9. THE CONTRACTOR SHALL SUBMIT SHOP DRAWINGS OF ALL PRODUCTS, MATERIALS AND PLANT SPECIFICATIONS TO THE SITE ENGINEER AND OWNER FOR REVIEW AND APPROVAL PRIOR TO FABRICATION OR DELIVERY TO THE SITE. ALLOW A MINIMUM OF 14 WORKING DAYS FOR REVIEW. APPROVED SHOP DRAWINGS WILL BE PROVIDED BY THE ENGINEER AND COPIED TO THE CITY OF POUGHKEEPSIE.
10. THE CONTRACTOR SHALL PROVIDE AND MAINTAIN TRAFFIC DEVICES FOR PROTECTION OF VEHICLES AND PEDESTRIANS CONSISTING OF DRUMS, BARRIERS, SIGNS, LIGHTS, FENCES AND UNIFORMED TRAFFIC MEN AS REQUIRED OR ORDERED BY THE ENGINEER OR REQUIRED BY THE LOCAL GOVERNING AUTHORITIES. CONTRACTOR SHALL MAINTAIN ALL TRAFFIC LANES AND PEDESTRIAN WALKWAYS AT ALL TIMES UNLESS WRITTEN APPROVAL FROM THE CITY AND GOVERNING AUTHORITIES IS GRANTED.
11. THE PROJECT DRAWINGS ARE GENERALLY DIAGRAMMATIC IN INDICATING THE PRESENCE OF EXISTING UNDERGROUND UTILITIES. INFORMATION ON EXISTING UTILITIES HAS BEEN COMPILED FROM AVAILABLE INFORMATION INCLUDING UTILITY COMPANY AND MUNICIPAL RECORD MAPS AND FIELD SURVEY AND IS NOT GUARANTEED TO BE CORRECT OR COMPLETE. UTILITIES ARE SHOWN TO ALERT THE CONTRACTOR OF THEIR PRESENCE AND THE CONTRACTOR IS SOLELY RESPONSIBLE FOR DETERMINING ACTUAL LOCATIONS AND ELEVATIONS OF ALL UTILITIES AND SERVICES. WHEN THE UTILITIES ARE TO BE LEFT IN PLACE, THE CONTRACTOR SHALL PROVIDE ADEQUATE MEANS OF SUPPORT AND PROTECTION DURING THE EXCAVATION AND BACKFILLING OPERATIONS.
12. PRIOR TO DEMOLITION OR CONSTRUCTION THE CONTRACTOR SHALL CONTACT "CALL BEFORE YOU DIG" AT 1-800-962-7962 AT LEAST 72 HOURS BEFORE COMMENCEMENT OF WORK TO VERIFY ALL UTILITY LOCATIONS. CONTRACTOR SHALL NOT INTERRUPT EXISTING UTILITIES SERVICING FACILITIES OCCUPIED AND USED BY THE OWNER OR OTHERS DURING OCCUPIED HOURS.
13. IF ANY UNCHARTED OR INCORRECTLY CHARTED EXISTING PIPING OR OTHER UTILITY IS UNCOVERED DURING EXCAVATION, THE CONTRACTOR SHALL CONSULT THE SITE ENGINEER IMMEDIATELY FOR DIRECTIONS BEFORE PROCEEDING FURTHER WITH THE WORK.
14. STORAGE OF FLAMMABLE AND HAZARDOUS MATERIALS SHALL BE IN COMPLIANCE WITH THE NYS FIRE AND BUILDING CODE.
15. CONTRACTOR TO PROVIDE SITE ENGINEER WITH SUBMITTALS. ONCE APPROVED, COPIES WILL BE SUPPLIED TO CITY ENGINEER AND APPROPRIATE CITY DEPARTMENTS.
16. NO HERBICIDES OR PESTICIDES WILL BE USED DURING THE OPERATION OF THE SITE.

NOTES:

1. NO EXISTING EASEMENTS, DEED RESTRICTIONS, COVENANTS, RIGHT-OF-WAYS, RESERVATIONS, REARS, OR DEDICATIONS TO PUBLIC USE ARE ASSOCIATED WITH THE PROPOSED PROJECT.
2. A RECIPROCAL ACCESS AGREEMENT WILL BE PROPOSED BETWEEN LOT 1 AND LOT 2 FOR PARKING CIRCULATION AND ACCESS.
3. LOCATION OF ANY FIRE BOXES AND OR CONNECTIONS TO THE CITY FIRE ALARM ARE SHOWN.
4. THE PROPOSED PROJECT IS NOT LOCATED IN A WATERFRONT OR OVERLAY DISTRICT.
5. NO EXISTING FLOOD PLAINS OR ENDANGERED SPECIES LOCATED IN THE PROJECT AREA.
6. SITE IS LOCATED WITHIN 2,000' OF NYSDEC REMEDIATION DATABASE SITES: 314071, C314125, B00148, 314122 & C314126

ADDITIONAL NOTES:

1. TOPOGRAPHIC INFORMATION FIELD PROVIDED BY LRC GROUP IN MAY OF 2019. SEE EXISTING CONDITIONS (EX-1) FOR ADDITIONAL INFORMATION.
2. CONTRACTOR TO FIELD VERIFY UTILITIES PRIOR TO CONSTRUCTION.
3. UPON APPROVAL OF THE SITE PLAN, THE APPROVED SITE PLAN WITH SIGNATURES SHALL BE PROVIDED IN PDF FORMAT. UPON COMPLETION OF CONSTRUCTION, AS-BUILT DRAWINGS SHALL BE PROVIDED TO THE CITY ENGINEERING IN AUTOCAD FORMAT.
4. ANY CURBS OR SIDEWALKS WITHIN THE CITY ROW DAMAGED BY CONSTRUCTION SHALL BE REPLACED PER CITY STANDARDS.

SIGN LEGEND

NO.	LEGEND	QTY.
A	STOP	1
B	RESERVED PARKING	2
C	NO PARKING ANYTIME	1
D	DO NOT ENTER	2
E		2

6162-69-065177
(49 CIVIC CENTER PLAZA)
JOURNAL PLAZA LLC
PO BOX 792
POUGHKEEPSIE, NY 12602

6162-69-090193
(85 CIVIC CENTER PLAZA)
PAGE PARK ASSOCIATES LLC
PO BOX 792
POUGHKEEPSIE, NY 12602

LEGEND

- EXISTING PROPERTY LINE
- EXISTING EASEMENT LINE
- BUILDING SETBACK LINE
- PROPOSED ASPHALT SURFACE
- PROPOSED CONCRETE SIDEWALK
- PROPOSED CONCRETE CURB
- PROPOSED EDGE OF BITUMINOUS CONCRETE
- PROPOSED ORNAMENTAL FENCE
- PROPOSED FREESTANDING LIGHT
- PROPOSED SIGN
- PROPOSED SNOW STORAGE
- LOW — PROPOSED LIMIT OF WORK LINE

Parking Summary Table						
		Lot #1 (Poughkeepsie Journal Building)			Lot #2 (Existing Building & Proposed Parking Lot)	
Parking Requirements	Required	Existing	Provided	Required	Existing	Provided
One (1) space per every 400 sq. ft. of GFA	72,000 GFA 180 spaces required	207	198 spaces provided	4,500 GFA 12 spaces required	16	47 spaces provided
Bicycle Parking: 10% of the required vehicle parking, but not less than two (2) or more than twenty (20)	18	5	5	2	0	20
Min Parking Dimensions		9' x 20'			9' x 20'	

A TOTAL OF 55 NEW 9'X20' PARKING SPACES HAVE BEEN PROVIDED

GRAPHIC SCALE
20 10 0 20
SCALE IN FEET

STATE OF NEW YORK
RODNEY E. MORRISON
LICENSED PROFESSIONAL ENGINEER
074194

No.	Date	Description
1.	2026-01-09	REVISED PER LANDSCAPE COMMENTS

Revisions

LRC Engineering & Surveying

- Civil Engineering
- Land Surveying
- Landscape Architecture
- Land Planning
- Laser Scanning & BIM
- Subsurface Utility Engineering

Land Resource Consultants Engineering & Surveying, LLC
Loureiro NY, P.C.
85 Civic Center Plaza, Suite 204
Poughkeepsie NY 12601
(845) 243-2880
160 West Street, Suite E
Cromwell, CT 06416
(860) 635-2877
www.lrcconsult.com

SITE PLAN

JOURNAL SQUARE

49 & 85 CIVIC CENTER PLAZA
CITY OF POUGHKEEPSIE
DUTCHESS COUNTY, NEW YORK

Design/Calcs	SMC	CAD File	SP19242601.dwg	Sheet No.
Drawn	KFC	Project No.	19-2426	SP-1
Checked	KFC	Date	11-19-2025	SHEET 3 OF 8
Approved	REM	Scale	1"=20'	

X:\JOBS\Jobs 2019\19-2426-Page Park 47-49 Civic Center\DWG\SP19242601.dwg 1/8/2026 1:14 PM Scurron

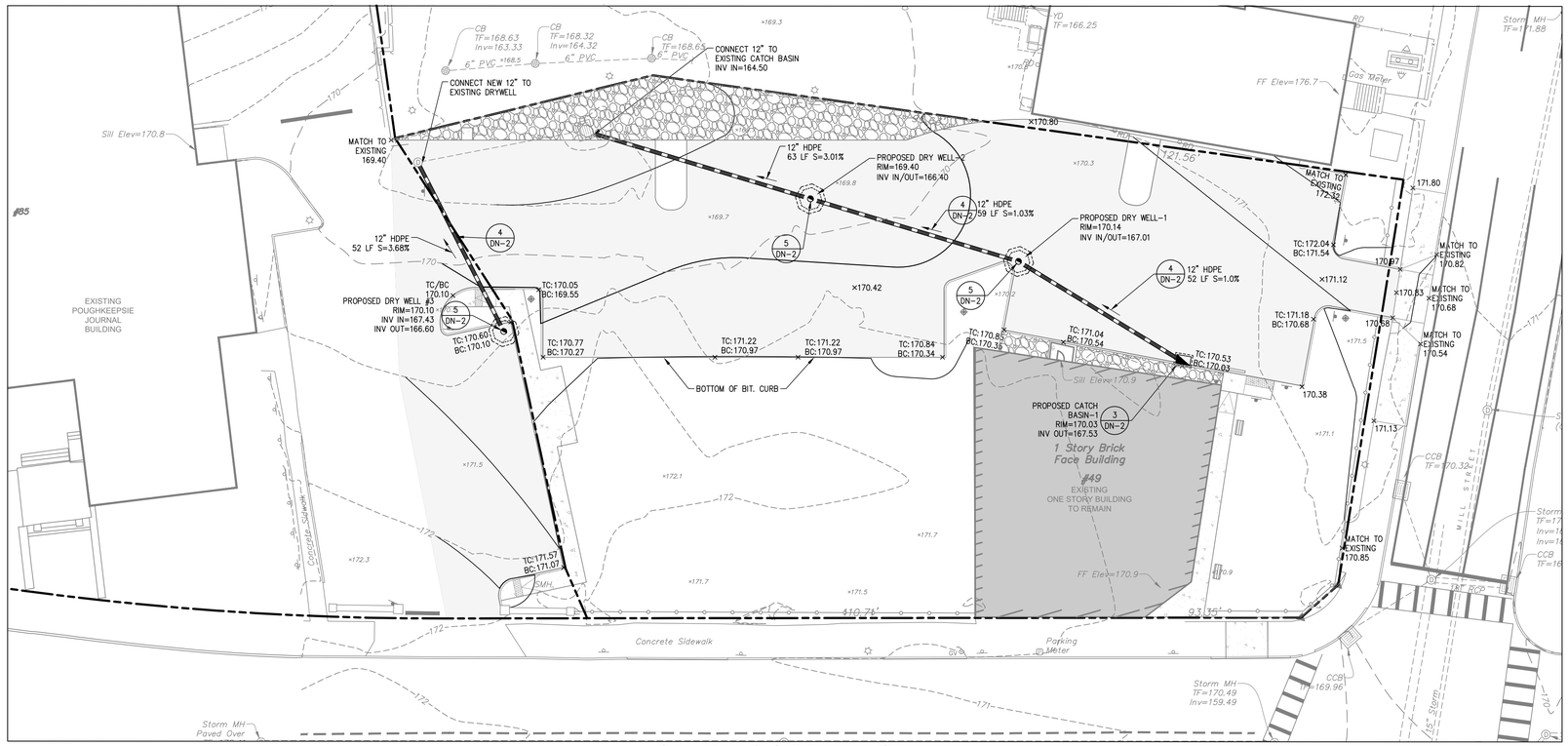

GRADING / DRAINAGE PLAN

SCALE: 1"=20'

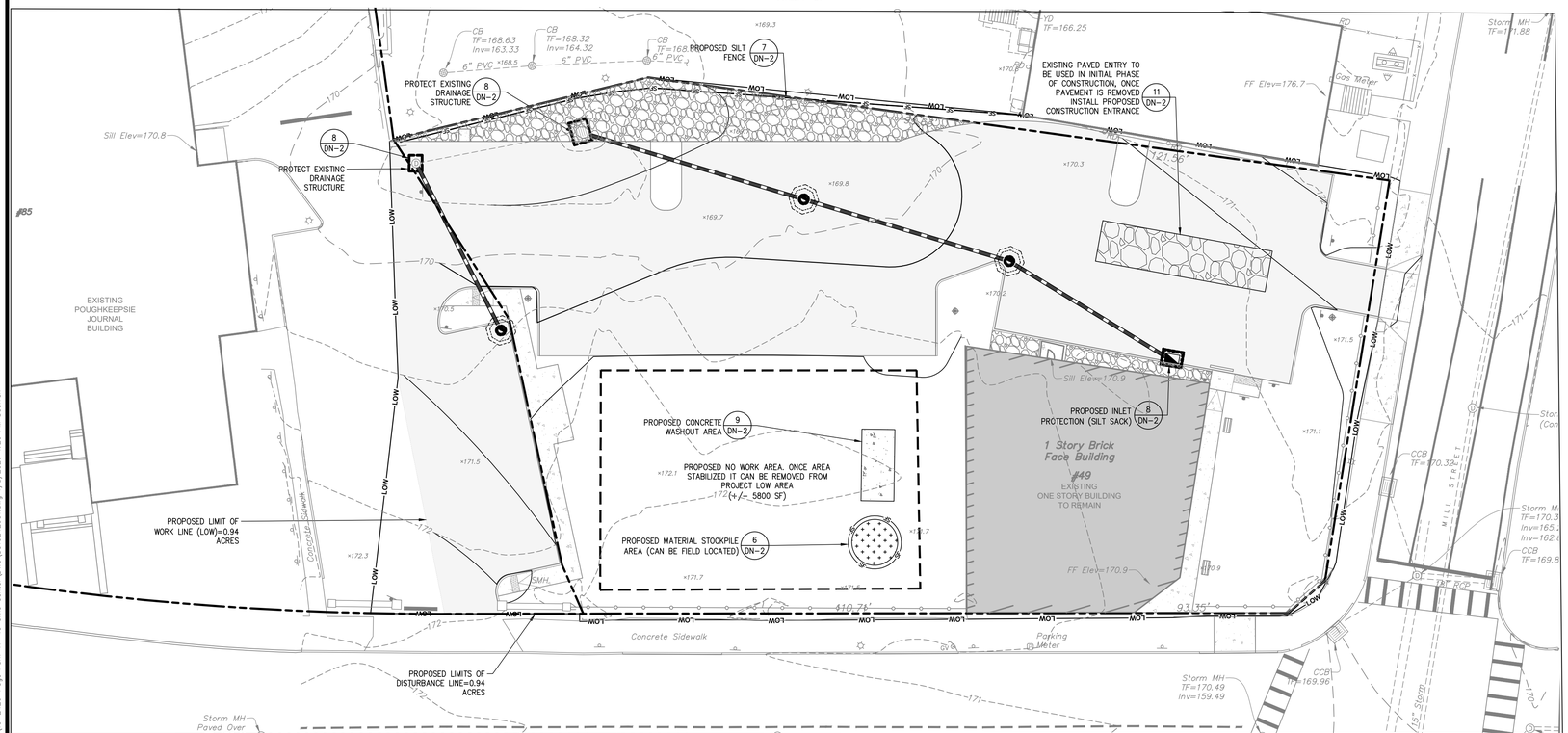

EROSION CONTROL PLAN

SCALE: 1"=20'

COMPACTION AND BACKFILL NOTES

UNLESS OTHERWISE SPECIFIED OR APPROVED BY THE SITE ENGINEER, ALL SITE SUBGRADE AND BACKFILL FOR ALL STRUCTURES INCLUDING, BUT NOT LIMITED TO, PARKING LOT SUBGRADE, ROAD SUBGRADE, CONCRETE PADS AND SIDEWALKS, WATER LINES AND STRUCTURES, SEWER LINES AND STRUCTURES, STORM LINES AND STRUCTURES, TRASH PADS/ENCLOSURES, AND SITE ELECTRICAL AND CONDUIT, SHALL BE COMPACTED IN ACCORDANCE WITH THE FOLLOWING STANDARD.

METHODS OF CONSTRUCTION SHALL BE IN ACCORDANCE WITH THE NEW YORK STATE DEPARTMENT OF TRANSPORTATION (NYSDOT) STANDARD SPECIFICATIONS FOR CONSTRUCTION AND MATERIALS, DATED MAY 1, 2008, AND ALL ADDENDA THERETO

LEGEND

- PROPERTY LINE
- EXISTING MAJOR CONTOUR
- EXISTING MINOR CONTOUR
- EXISTING SPOT GRADE
- PROPOSED SPOT GRADE
- PROPOSED MAJOR CONTOUR LINE
- PROPOSED MINOR CONTOUR LINE
- PROPOSED STORM LINE
- EXISTING STORM LINE
- EXISTING YARD DRAIN
- EXISTING CURB CATCH BASIN
- PROPOSED CATCH BASIN
- PROPOSED DRYWELL

GRADING AND DRAINAGE NOTES

1. ALL EXISTING STRUCTURES NOTED TO BE REMOVED, FENCING, TREES, ETC., WITHIN CONSTRUCTION AREA SHALL BE REMOVED & DISPOSED OF OFF SITE. ANY BURNING ON SITE SHALL BE SUBJECT TO LOCAL ORDINANCES.
2. CONTRACTOR SHALL NOTIFY ALL UTILITY COMPANIES HAVING UNDERGROUND UTILITIES ON SITE OR IN RIGHT-OF-WAY PRIOR TO EXCAVATION. CONTRACTOR SHALL CONTACT UTILITY LOCATING COMPANY AND LOCATE ALL UTILITIES PRIOR TO GRADING START.
3. SITE GRADING SHALL NOT PROCEED UNTIL EROSION CONTROL MEASURES HAVE BEEN INSTALLED.
4. PROPOSED DRAINAGE DESIGN, LAYOUT AND MATERIALS AS SHOWN IS PER THE 2020 PREVIOUSLY APPROVED PLAN SET.

CITY OF POUGHKEEPSIE EROSION AND SILTATION CONTROL NOTES

1. All unvegetated areas in excess of 10%, per direction of the Engineer, shall have temporary seeding of fast germinating rye, 10 to 15 #'s per 1,000 sq. ft.
2. Graded areas – upper elevations: Provide temporary drainage swales, 1% grade min., to direct runoff away from construction sites. Discharge areas to be acceptable to the Engineer.
3. Graded areas – lower elevations: Provide drainage swales, 1% min. grades, with staked and secured hay bale siltation. Location of hay bales and discharge areas per approval of Engineer.
4. Permanent seeded areas for erosion control: Mixture of perennial rye and blue and red fescue grasses (50/50), 15 to 25 #'s per 1,000 sq. ft., mulching at 5#'s per 1,000 sq. ft., fertilizer – 5.10.5 at 5#'s per 1,000 sq. ft. (if determined necessary by Engineer), with pegging and netting for grades in excess of 15%.
5. All permanent drainage interceptor swales to be seeded per Item 4 also.
6. All erosion control shall be in accordance with the latest "Urban Erosion and Sediment Control Guidebook" of the Dutchess County Soil and Water Conservation District.
7. All areas shall be seeded and mulched as soon as possible.
8. Grade as needed and feasible to permit the use of conventional equipment for seed bed preparation, seeding and mulch application.
9. Scarify all compacted soils prior to applying topsoil.
10. Apply topsoil per Standard #6 Table 6.1 of the Soil Erosion Control Guide Book.
11. Seed mix shall be as follows:
    Ky. Blue grass 20 lbs/ac.
    Creeping Red Fescue 40 lbs/ac.

LEGEND

- PROPERTY LINE
- PROPOSED SILT FENCE
- PROPOSED SILT SACKS
- PROPOSED LIMIT OF WORK (LOW)
- PROPOSED CONCRETE WASHOUT AREA
- PROPOSED CONSTRUCTION ENTRANCE
- PROPOSED EROSION CONTROL MATTING
- PROPOSED SOIL MATERIALS STOCKPILE AREA WITH SILT FENCE

GRAPHIC SCALE
20 10 0 20
SCALE IN FEET

STATE OF NEW YORK
SIDNEY E. MORRISON
074194
LICENSED PROFESSIONAL ENGINEER

#	Date	Description
1	2026-01-09	REVISED PER LANDSCAPE COMMENTS

Revisions

LRC Engineering & Surveying
- Civil Engineering
- Land Surveying
- Landscape Architecture
- Land Planning
- Laser Scanning & BIM
- Subsurface Utility Engineering

Land Resource Consultants Engineering & Surveying, LLC
Loureiro NY, P.C.
85 Civic Center Plaza, Suite 204
Poughkeepsie NY 12601
(845) 243-2880
160 West Street, Suite E
Cromwell, CT 06416
(860) 635-2877
www.lrcconsult.com

SITE GRADING / DRAINAGE & EROSION CONTROL PLAN

JOURNAL SQUARE

49 & 85 CIVIC CENTER PLAZA
CITY OF POUGHKEEPSIE
DUTCHESS COUNTY, NEW YORK

Design/Calcs	SMC	CAD File	SG19242601.dwg	Sheet No.
Drawn	KFC	Project No.	19-2426	SG-1
Checked	KFC	Date	11-19-2025	SHEET 4 OF 8
Approved	REM	Scale	1"=20'	

K:\JOBS\Jobs 2019\19-2426-Prop Park 47-49 Civic Center\DWG\SG19242601.dwg 1/8/2026 1:26 PM SGsrm



LANDSCAPE NOTES:

1. THE LANDSCAPE PLAN AND DETAIL SHEET ARE FOR LANDSCAPING INFORMATION ONLY. PLEASE REFER TO THE SITE LAYOUT PLAN, LIGHTING PLAN, GRADING PLAN AND UTILITIES PLAN FOR ALL OTHER INFORMATION.
2. THE CONTRACTOR SHALL GUARANTEE THAT ALL PLANTS, TREES, AND SHRUBS SHALL BE HEALTHY AND FREE OF DISEASE FOR A PERIOD OF ONE YEAR AFTER SUBSTANTIAL COMPLETION AND ACCEPTANCE BY OWNER OR LANDSCAPE ARCHITECT. CONTRACTOR SHALL REPLACE ANY DEAD OR UNHEALTHY PLANTS AT CONTRACTOR'S EXPENSE. PLANT MATERIAL REPLACEMENTS SHALL BE GUARANTEED FOR ONE FULL YEAR FROM DATE OF REPLACEMENT. FINAL ACCEPTANCE SHALL BE MADE IF ALL PLANTS MEET THE GUARANTEE REQUIREMENTS INCLUDING MAINTENANCE. MAINTENANCE RESPONSIBILITIES INCLUDE CULTIVATING, SPRAYING, WEEDING, WATERING, TIGHTENING GUYS, PRUNING, FERTILIZING, MULCHING, AND ANY OTHER OPERATIONS NECESSARY TO MAINTAIN PLANT VIABILITY. MAINTENANCE SHALL BEGIN IMMEDIATELY AFTER PLANTING AND CONTINUE UNTIL THE END OF THE ONE YEAR GUARANTEE PERIOD.
3. THE CONTRACTOR SHALL SUPPLY ALL LABOR, PLANTS, AND MATERIALS IN QUANTITIES SUFFICIENT TO COMPLETE THE WORK SHOWN ON THE DRAWINGS AND LISTED IN THE PLANT SCHEDULE. IN THE EVENT OF A DISCREPANCY BETWEEN QUANTITIES SHOWN IN THE PLANT SCHEDULE AND THOSE REQUIRED BY THE DRAWINGS, THE LARGER SHALL APPLY.
4. ALL SHRUB MASSINGS SHALL BE MULCHED TO A DEPTH OF 4" WITH RIVER ROCK STONE MULCH.
5. NO PLANT SHALL BE PLACED IN THE GROUND BEFORE ROUGH GRADING HAS BEEN COMPLETED AND APPROVED BY ENGINEER. STAKING THE LOCATION OF ALL TREES AND SHRUBS SHALL BE COMPLETED PRIOR TO PLANTING FOR APPROVAL BY THE OWNER OR LANDSCAPE ARCHITECT. STAKING OF THE INSTALLED TREE MUST BE COMPLETED THE SAME DAY AS IT IS INSTALLED. ALL TREES SHALL BE STAKED OR GUYED PER DETAIL. SEE SHEET DN-1 FOR PLANTING DETAILS.
6. COORDINATE PLANT MATERIAL LOCATIONS WITH SITE UTILITIES. SEE SITE LAYOUT, GRADING AND UTILITY DRAWINGS FOR STORM, SANITARY AND WATER LINES. SEE LIGHTING PLAN FOR ELECTRICAL AND LIGHTING LAYOUT AND DETAILS. UTILITY LOCATIONS ARE APPROXIMATE. EXERCISE CARE WHEN DIGGING IN AREAS OF POTENTIAL CONFLICT WITH UNDERGROUND OR OVERHEAD UTILITIES. THE CONTRACTOR IS RESPONSIBLE FOR ANY DAMAGE DUE TO CONTRACTOR'S NEGLIGENCE AND SHALL REPLACE OR REPAIR ANY DAMAGE AT CONTRACTOR'S EXPENSE.
7. LANDSCAPE PLANTING PITS MUST BE FREE DRAINING. PAVEMENT, COMPACTED SUBGRADE, AND BLASTED ROCK SHALL BE REMOVED FROM WITHIN TRAFFIC ISLANDS TO BE LANDSCAPED TO A DEPTH OF 2' OR TO A GREATER DEPTH IF REQUIRED BY PLANTING DETAILS OR SPECIFICATIONS. REPLACE SOIL WITHIN ISLANDS WITH MODERATELY COMPACTED LOAM OR SANDY LOAM FREE FROM STONES AND RUBBISH 1" OR GREATER IN DIAMETER AND ANY OTHER MATERIAL HARMFUL TO PLANT GROWTH AND DEVELOPMENT. PLANTING INSTALLATION WITHIN ISLANDS SHALL BE AS DETAILED AND CONTAIN PLANTING MIX AS SPECIFIED.
8. TIME OF PLANTING: NEW PLANT MATERIALS SHALL BE INSTALLED BETWEEN APRIL 1 AND JUNE 1, OR AFTER SEPTEMBER 15TH AND NO LATER THAN OCTOBER 31ST.
9. PLANTING SOIL MIXTURE FOR TREES AND SHRUBS:
   - 1 PART PEAT MOSS
   - 3 PARTS TOPSOIL
   - FERTILIZER/LIME (APPLY AS RECOMMENDED BY SOIL ANALYSIS)
   - MYCORRHIZA INOCULANT - "TRANSPLANT 1-STEP" AS MANUFACTURED BY ROOTS, INC. OR APPROVED EQUAL.
   USE PER MANUFACTURER'S RECOMMENDATIONS FOR TREES AND SHRUBS.
10. TOPSOIL SHALL BE INSTALLED AT A MINIMUM DEPTH OF 6". CONTRACTOR SHALL SUBMIT TOPSOIL TO A CERTIFIED TESTING LABORATORY TO DETERMINE pH, FERTILITY, ORGANIC CONTENT AND MECHANICAL COMPOSITION. THE CONTRACTOR SHALL SUBMIT THE TEST RESULTS FROM REGIONAL EXTENSION OFFICE OF USDA TO THE OWNER OR LANDSCAPE ARCHITECT FOR REVIEW AND APPROVAL. CONTRACTOR SHALL INCORPORATE AMENDMENTS FOR GOOD PLANT GROWTH AND PROPER SOIL ACIDITY RECOMMENDED FROM THE TOPSOIL TEST.
11. LAWN SEEDING MIXTURE:

    15% KENTUCKY BLUEGRASS (POA PRATENSIS - SINGLE VARIETY)
    15% PERENNIAL RYEGRASS (LOLIUM PERENNE)
    30% CREEPING RED FESCUE (FESTUCA RUBRA)
    25% CHEWINGS FESCUE (FESCTUCA RUBRA "JAMESTOWN II")
    15% HARD FESCUE (FESTUCA OVINA "RELIANT II")

    SEEDING RATE: 4.5 LBS PER 1,000 S.F. (ADD 10% TO QUANTITY IF HYDROSEEDED).

    SEEDING DATES: AUGUST 15 - OCTOBER 1 AND APRIL 15 - JUNE 15 UNLESS OTHERWISE APPROVED BY THE OWNER OR LANDSCAPE ARCHITECT.
12. ALL SLOPES GREATER THAN 3:1 RECEIVING A GRASS SEEDING MIXTURE SHALL BE COVERED WITH AN EROSION CONTROL BLANKET.
13. ALL DISTURBED AREAS NOT OTHERWISE DEVELOPED SHALL BE SEEDED WITH THE LAWN SEEDING MIXTURE.
14. PLANTING AND LAWN AREAS ARE TO BE WATERED WITH A HIGH EFFICIENCY IRRIGATION SYSTEM FEATURING DRIP EMITTERS AND MICRO SPRAY HEADS FOR SHRUB AND PERENNIAL/ORNAMENTAL GRASSES/GROUND COVER BEDS.

LEGEND

PROPOSED TREE
PROPOSED SHRUB
PROPOSED RIVER ROCK
PROPOSED MULCH

PLANT LIST:

	CODE	QTY.	BOTANICAL NAME	COMMON NAME	ROOT	SIZE INSTALLED	SIZE MATURE	COMMENTS
TREES:	JP	9	ACER RUBRUM 'KARPICK'	JUNIPERS	#2-#3	12-24"		
	YW	2	'TAXUS"	YEW	#3	24-30"		
	MN	1	'MAGNOLIA'	MAGNOLIA	B&B	2"-2.5" CAL	20'-30' HT.	
SHRUBS:								
	BW	45	BOXWOODS	GENUS BUXUS	B&B	18"-24"		Spaced 2' O.C.
GRASSES:	-	-	DOUBLE PLAY CANDY CORN	SPIREA				
	-	-	CATS PAJAMAS	NEPETA				
	-	-	GOLD SPLASH WINTERCREEPER	ROEMERTWO				
	-	-	AUTUMN FIRE	HYLOTELEPHIUM SPECTABILE				

SEE DN-3 FOR LIGHTING CUT SHEETS

GRAPHIC SCALE
20 10 0 20
SCALE IN FEET

LANDSCAPE PLAN
SCALE:1"=20'

LIGHTING PLAN
SCALE:1"=20'

No.	Date	Description
1.	2026-01-09	REVISED PER LANDSCAPE COMMENTS

Revisions

STATE OF NEW YORK
SIDNEY E MORRISON
074194
LICENSED PROFESSIONAL ENGINEER

LRC Engineering & Surveying
- Civil Engineering
- Land Surveying
- Landscape Architecture
- Land Planning
- Laser Scanning & BIM
- Subsurface Utility Engineering

Land Resource Consultants Engineering & Surveying, LLC
Loureiro NY, P.C.
85 Civic Center Plaza, Suite 204
Poughkeepsie NY 12601
(845) 243-2880
160 West Street, Suite E
Cromwell, CT 06416
(860) 635-2877
www.lrcconsult.com

SITE LANDSCAPE / LIGHTING PLAN

JOURNAL SQUARE

49 & 85 CIVIC CENTER PLAZA
CITY OF POUGHKEEPSIE
DUTCHESS COUNTY, NEW YORK

Design/Calcs	SMC	CAD File LL-19-242601.dwg	Sheet No.
Drawn	KFC	Project No. 19-2426	LL-1
Checked	KFC	Date 11-19-2025	SHEET 5 OF 8
Approved	REM	Scale 1"=20'	

K:\JOBS\Jobs 2019\19-2426-Prop Park 47-49 Civic Center\2)WO\LL-19-242601.dwg 1/9/2026 2:35 PM SSurron

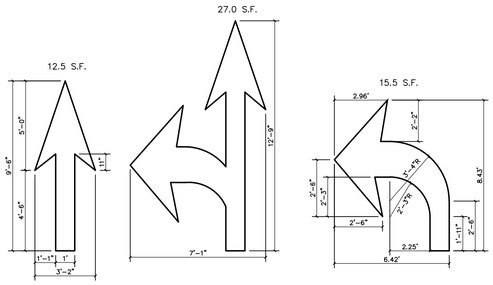

REFER TO ADJACENT VIEWS FOR DIMENSIONS (WHITE)
(ARROWS TO BE CENTERED IN TRAVEL LANE)

1 PAVEMENT ARROW DETAIL
SCALE: 1/4"=1'-0"

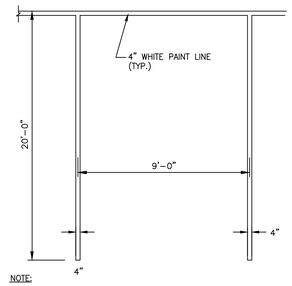

NOTE:
1. PROVIDE 2 COATS OF PAINT ON ALL SURFACES.
2. SEE PLAN FOR ACTUAL SPACE LOCATION AND DIMENSIONS.

2 TYPICAL PARKING SPACE DETAIL
NOT TO SCALE

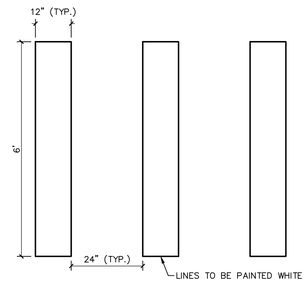

NOTES:
1. PROVIDE TWO COATS OF PAINT ON ALL SURFACES.
2. SEE PLANS FOR LOCATION OF CROSSWALKS.
3. ALL PAVEMENT MARKINGS SHALL BE PLACED IN ACCORDANCE WITH THE NATIONAL MUTCD AND NYS SUPPLEMENT.

3 PAINTED CROSSWALK STRIPING DETAIL
SCALE: 1/2" = 1'-0"

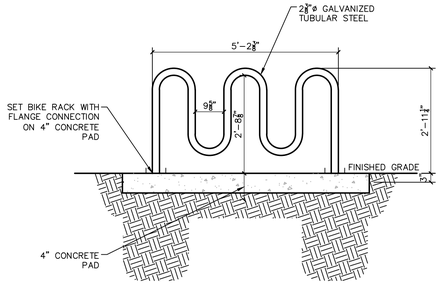

4 BIKE RACK DETAIL
SCALE: 1/2" = 1'-0"

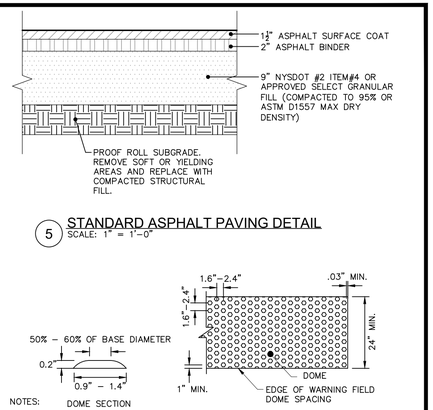

5 STANDARD ASPHALT PAVING DETAIL
SCALE: 1" = 1'-0"

NOTES:
1. THE DETAILS PROVIDED ARE NOT DRAWN TO SCALE, THE QUANTITY OF DOMES DEPICTED ON THE DETECTABLE WARNING UNIT (THE DOMES AND THE ENTIRE 24" LEVEL SURFACE) IS FOR ILLUSTRATION ONLY.
2. THE SIZE OF THE DETECTABLE WARNING FIELD SHALL BE 24" IN THE DIRECTION OF TRAVEL AND SHALL EXTEND THE FULL WIDTH OF THE CURB RAMP OR FLUSH SURFACE.
3. THE ROWS OF DOMES SHALL BE ALIGNED TO BE PERPENDICULAR OR RADIAL TO THE GRADE BREAK BETWEEN THE RAMP LANDING OR CURB RAMP AND THE STREET.
4. WHERE DOMES ARE ARRAYED RADIALLY THEY MAY DIFFER IN DOME DIAMETER AND CENTER–TO– CENTER SPACING WITHIN THE RANGES SPECIFIED ON THIS SHEET.
5. THE DETECTABLE WARNING FIELD SHALL BE THE COLOR SPECIFIED IN THE CONTRACT DOCUMENTS OR MEET THE REQUIREMENTS OF THE STANDARD SPECIFICATIONS.
6. DETECTABLE WARNING SHALL BE LOCATED SO THAT THE EDGE OR CORNER OF THE WARNING FIELD NEAREST TO THE ROADWAY IS 5" TO 9" FROM THE FRONT OF THE CURB OR THE ROADWAY EDGE (12" WHERE TRAVERSABLE CURB IS USED). INSTALL THE DETECTABLE WARNING FIELD BEHIND THE FLUSH CURB.
7. THE EDGE OF THE DETECTABLE WARNING FIELD NEAREST TO A RAILROAD CROSSING SHALL BE 6'–0" MINIMUM AND 15'–0" MAXIMUM FROM THE CENTERLINE OF THE NEAREST RAIL.

12 DETECTABLE WARNING STRIP
NOT TO SCALE

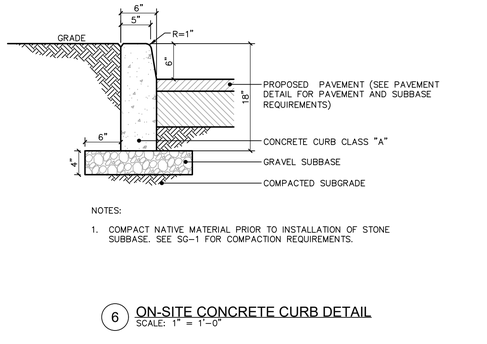

NOTES:
1. COMPACT NATIVE MATERIAL PRIOR TO INSTALLATION OF STONE SUBBASE. SEE SG-1 FOR COMPACTION REQUIREMENTS.

6 ON-SITE CONCRETE CURB DETAIL
SCALE: 1" = 1'-0"

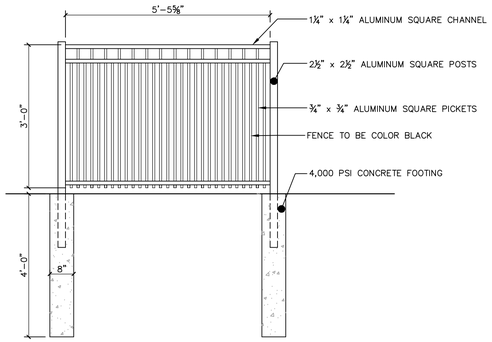

7 ALUMINUM PICKET FENCE PANEL
SCALE: 1/2" = 1'-0"

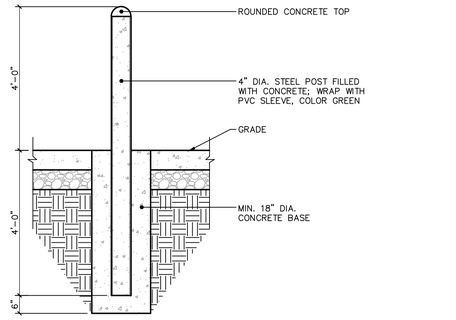

8 CONCRETE FILLED STEEL BOLLARD (EVCS)
SCALE: 1/2" = 1'-0"



9 EV CHARGING STATION UNIT
NOT TO SCALE

NOTES:
1. SEE SITE PLAN FOR ACCESSIBLE SPACE LOCATION AND DIMENSIONS.
2. PROVIDE 2 COATS OF PAINT ON ALL SURFACES.

11 TYPICAL ACCESSIBLE PARKING SPACE DETAIL
SCALE: 1/4"=1'-0"

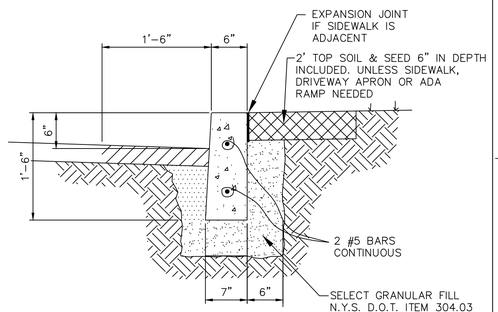

FORMED CURB DETAIL
12

CITY OF POUGHKEEPSIE ENGINEERING DEPARTMENT 62 CIVIC CENTER PLAZA POUGHKEEPSIE, NY 12602	FILE NO.: 001-DET	FORMED CURB DETIAL	PAGE NO.
	DATE: 3-6-00		
	SCALE: AS NOTED		
	DRAWN BY: JP		

DETAILS PROVIDED BY THE CITY OF POUGHKEEPSIE. FOR ALL WORK TO BE PERFORMED IN THE CITY ROW.

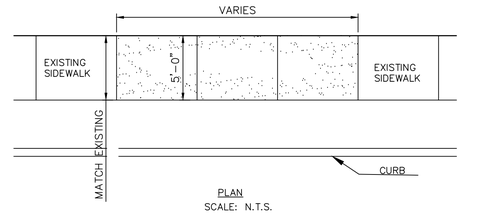

PLAN
SCALE: N.T.S.

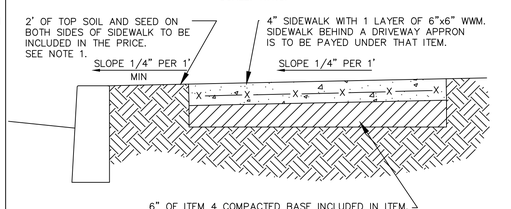

NOTES:
1. WHERE MATERIAL IS NOT USED THE CITY OF POUGHDEEPSIE WILL BE CREDITED IN AREAS WHERE MORE THAN THE SPECIFIED AMOUNT OF MATERIAL IS USED. MAJOR GRADE CHANGES WILL BE APPROVED BY THE CITY ENGINEERING DEPT. AND WILL BE PAYED UNDER APROPRIATE ITEMS.

SECTION

SIDEWALK DETAIL REPLACE & NEW
13

CITY OF POUGHKEEPSIE ENGINEERING DEPARTMENT 62 CIVIC CENTER PLAZA POUGHKEEPSIE, NY 12602	PROJECT: 001-DET	SIDEWALK DETAIL
	DATE: 5-16-00	
	SCALE: AS NOTED	
	DRAWN BY: JP	

DETAILS PROVIDED BY THE CITY OF POUGHKEEPSIE. FOR ALL WORK TO BE PERFORMED IN THE CITY ROW.

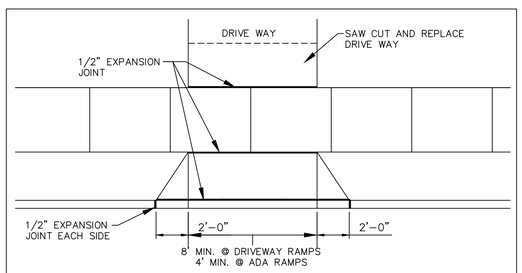

PLAN

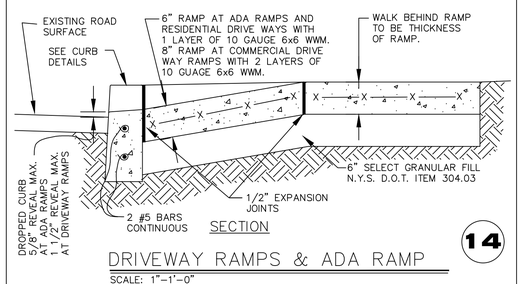

SECTION

DRIVEWAY RAMPS & ADA RAMP
SCALE: 1"=1'-0"
14

CITY OF POUGHKEEPSIE ENGINEERING DEPARTMENT 62 CIVIC CENTER PLAZA POUGHKEEPSIE, NY 12602	FILE NO.: 001-DET	DRIVEWAY & ADA RAMP DETIAL	PAGE NO.
	DATE: 3-6-00		
	SCALE: AS NOTED		
	DRAWN BY: JP		

DETAILS PROVIDED BY THE CITY OF POUGHKEEPSIE. FOR ALL WORK TO BE PERFORMED IN THE CITY ROW.

STATE OF NEW YORK RODNEY E. MORRISON LICENSED PROFESSIONAL ENGINEER 074104

No.	Date	Description
1.	2026-01-09	REVISED PER LANDSCAPE COMMENTS

Revisions

LRC Engineering & Surveying
- Civil Engineering
- Land Surveying
- Landscape Architecture
- Land Planning
- Laser Scanning & BIM
- Subsurface Utility Engineering

Land Resource Consultants Engineering & Surveying, LLC Loureiro NY, P.C.
85 Civic Center Plaza, Suite 204
Poughkeepsie NY 12601
(845) 243-2880
160 West Street, Suite E
Cromwell, CT 06416
(860) 635-2877
www.lrcconsult.com

PROJECT DETAILS

JOURNAL SQUARE

49 & 85 CIVIC CENTER PLAZA
CITY OF POUGHKEEPSIE
DUTCHESS COUNTY, NEW YORK

Design/Calcs	SMC	CAD File	DN19242601.dwg	Sheet No.
Drawn	KFC	Project No.	19-2426	DN-1
Checked	KFC	Date	11-19-2025	SHEET 6 OF 8
Approved	REM	Scale	NOTED	

X:\JOBS\Jobs 2019\19-2426-Page Park 47-49 Civic Center\DWG\DN19242601.dwg 1/8/2026 1:19 PM SCurran

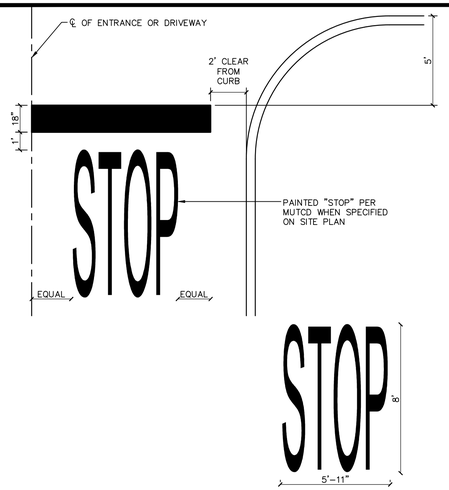

1 STOP BAR DETAIL
SCALE: 1/4"=1'-0"

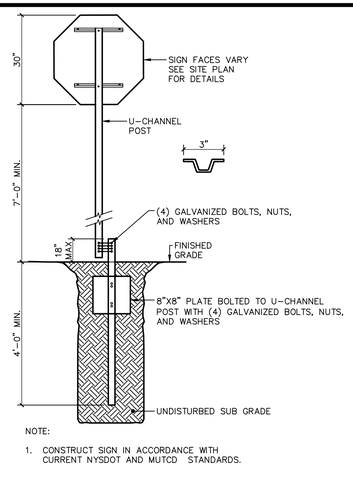

NOTE:
1. CONSTRUCT SIGN IN ACCORDANCE WITH CURRENT NYSDOT AND MUTCD STANDARDS.

2 BREAKAWAY STOP SIGN DETAIL
SCALE: 1/2" = 1'-0"

NOTES:
1. PRECAST CONCRETE CATCH BASIN SECTIONS AS MANUFACTURED BY FORT MILLER OR APPROVED EQUAL.
2. CATCH BASIN SHALL BE PRECAST CONCRETE. DESIGNED FOR H20 VEHICULAR LOADING AND 25% IMPACT.
3. FRAME AND COVER SHALL BE DESIGNED FOR H20 VEHICULAR LOADING AND 25% IMPACT. FRAME TO BE GENERAL FOUNDRIES, INC. MODEL #2340B OR APPROVED EQUAL.
4. CONCRETE CATCH BASIN CASTING CLEAR OPENING DIMENSION MUST MATCH FRAME AND GRATE CLEAR OPENING DIMENSION.
5. CATCH BASINS HAVING A DEPTH GREATER THAN 48" FROM FINISHED SURFACE TO THE TOP OF THE CONCRETE BASE SHALL BE PROVIDED WITH STEPS.
6. BACKFILL USING TRENCH BACKFILL, COMPACTED IN 6" LIFTS.
7. SUMPS FOR CATCH BASINS SHALL BE 24".

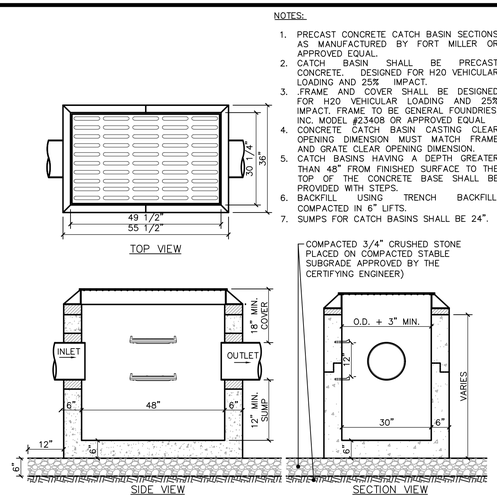

3 CURB LESS TYPE CATCH BASIN DETAIL
SCALE: 1/2" = 1'-0"

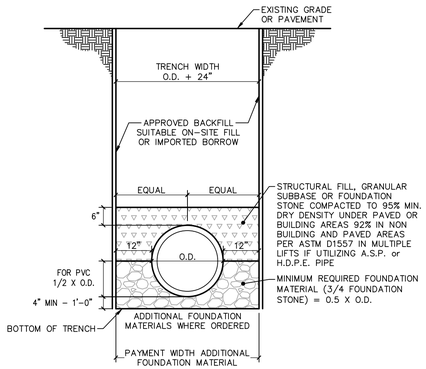

4 TYPICAL STORM SEWER TRENCH SECTION
SCALE: 1/2" = 1'-0"

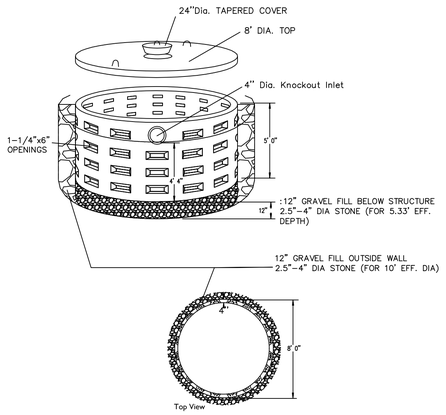

MIN SPECIFICATIONS	
Concrete Min.Strength: 4,000 psi at 28 days	DRY WELL
Load Rating: H20	REF: GRIMM BUILDING MATERIALS ALBANY, NY WWW.GRIMMBLDG.COM

5 PRECAST DRYWELL DETAIL

NOTES:

1. DRYWELL MEET H20 LOADING REQUIREMENTS.
2. SHOP DRAWING TO BE PROVIDED AND APPROVED BY SITE ENGINEER PRIOR TO INSTALLING.
3. PIT EXCAVATION TO BE RAKED TO MINIMIZE SIDEWALL SMEARING THAT MAY OCCUR AND REDUCE INFILTRATION CAPACITY. IF GROUNDWATER IS ENCOUNTERED, THE PIT IS TO BE BACKFILLED WITH THE ORIGINAL SOIL TO AN ELEVATION FOUR FEET HIGHER THAN MAXIMUM GROUNDWATER AND ADJUSTMENTS MADE IN THE PIT DIMENSIONS. IF ROCK OR GROUNDWATER ARE ENCOUNTERED NOTIFY THE SITE ENGINEER IMMEDIATELY. DCDBCH SHOULD BE NOTIFIED IF ROCK OR WATER IS ENCOUNTERED.
4. THE LININGS ARE TO BE SURROUNDED BY (AND PLACED ON) 12 INCHES OF ANNULAR RING OF LARGE AGGREGATE (2.5"-4" IN SIZE).
5. THE ROCK IS TO BE COVERED WITH GEOTEXTILE FABRIC PREVENT SOIL FROM FILLING THE VOID SPACE.
6. PROVIDE CONCRETE RISER TO GRADE WITH 24" MIN MANHOLE LID.

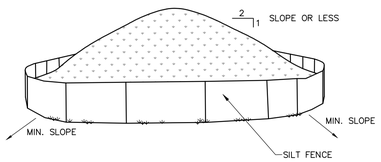

NOTES:
1. AREA CHOSEN FOR STOCKPILING OPERATIONS SHALL BE DRY AND STABLE.
2. MAXIMUM SLOPE OF STOCKPILE SHALL BE 1V:2H.
3. UPON COMPLETION OF SOIL STOCKPILING, EACH PILE SHALL BE SURROUNDED WITH SILT FENCING, THEN STABILIZED WITH VEGETATION OR COVERED.
4. SEE SPECIFICATIONS FOR INSTALLATION OF SILT FENCE.
5. HAYBALES OR SILT SOCKS TO BE USED WHERE STOCKPILES ARE LOCATED ON PAVED AREAS.

6 MATERIALS STOCKPILE DETAIL
SCALE: N.T.S.

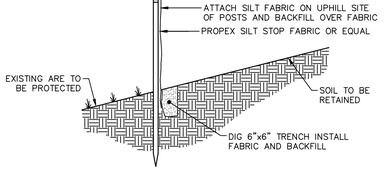

NOTE: FOR SLOPES > 5:1; PERPENDICULAR WINGS PLACED EVERY 100'
FOR SLOPES > 3:1 TO 5:1; PERPENDICULAR WINGS PLACED EVERY 75'
FOR SLOPES > 2:1 TO 3:1; PERPENDICULAR WINGS PLACED EVERY 50'

7 SILT FENCE DETAIL
SCALE: N.T.S.

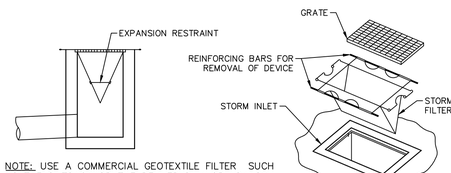

NOTE: USE A COMMERCIAL GEOTEXTILE FILTER SUCH AS THE SILTSACK OR THE BEAVER DAM OR DANDY BAG MANUFACTURED BY DANDY PRODUCTS OR AN APPROVED EQUAL.

SILT SACK DETAIL
SCALE: N.T.S.

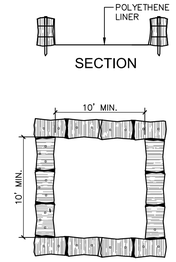

NOTES:
1. CONCRETE WASHOUT SIGN TO BE INSTALLED WITHIN 30 FEET OF THE TEMPORARY CONCRETE WASHOUT FACILITY.
2. REMOVE HARDENED CONCRETE WHEN WITHIN 4" FROM TOP OF STRUCTURE.
3. CONSTRUCT NEW FACILITIES ONCE CURRENT FACILITIES ARE TWO-THIRDS FULL. IF CONCRETE HAS NOT HARDENED CONSTRUCT NEW FACILITIES ONCE CURRENT FACILITY IS TWO-THIRDS FULL.
4. LINERS, HAYBALES, ETC SHALL BE INSPECTED FOR DAMAGE. ANY DAMAGE SHALL BE REPAIRED PROMPTLY.
5. SEPARATE FACILITIES TO BE USED FOR VEHICLE WASHING IF NEEDED.
6. NO CONCRETE IS TO BE WASHOUT OUT ON THE GROUND IN ANY LOCATION.

9 ABOVE GROUND TEMPORARY CONCRETE/VEHICLE WASHOUT FACILITY DETAIL
SCALE: 1/8" = 1'-0"

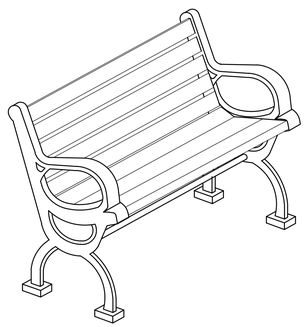

NOTES:
1. SURFACE MOUNTED, DUAL-LEG PARK BENCH WITH ARMS AND CURVED BACK, WITH INTERMEDIATE BENCH AND BACK SUPPORT, OR APPROVED EQUAL.

   LENGTH: 6 FEET, MINIMUM

   FRAME AND ARMS: CAST-IRON OR STEEL WITH FACTORY-APPLIED POWER COATING, BLACK. PROVIDE RIGID LATERAL UNDERSUPPRT JOINING ARM/LEG FRAMEWORK.

   SEAT AND BACK: NATURALLY ROT- AND INSECT-RESISTANT WOOD, CEDAR, PAULOPE, REDWOOD, MAHOGANY, IPE, OR EQUAL. FORMED FROM EVENLY SPACED PARALLEL SLATS 1-1/2" MINIMUM THICKNESS.

   HARDWARE: VANDAL AND CORROSION RESISTANT
2. INSTALL BENCH LEVEL, PLUMB, TRUE, AND SECURELY ANCHORED AT LOCATION INDICATED.

10 STANDARD BENCH DETAIL
SCALE: N.T.S.

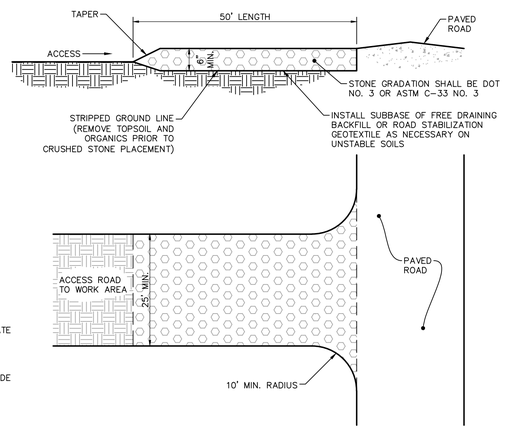

11 CONSTRUCTION ENTRANCE DETAIL
SCALE: 1/16" = 1'-0"

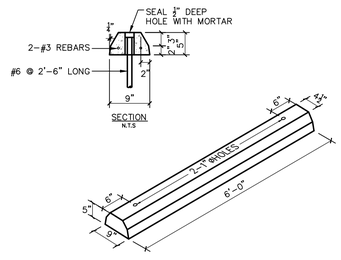

12 PRECAST CONCRETE WHEEL STOP DETAIL
SCALE: 1/2" = 1'-0"

STATE OF NEW YORK
RODNEY E MORRISON
074191
LICENSED PROFESSIONAL ENGINEER

No.	Date	Description
1.	2026-01-09	REVISED PER LANDSCAPE COMMENTS

Revisions

LRC Engineering & Surveying
- Civil Engineering
- Land Surveying
- Landscape Architecture
- Land Planning
- Laser Scanning & BIM
- Subsurface Utility Engineering

Land Resource Consultants Engineering & Surveying, LLC
Loureiro NY, P.C.
85 Civic Center Plaza, Suite 204
Poughkeepsie NY 12601
(845) 243-2880
160 West Street, Suite E
Cromwell, CT 06416
(860) 635-2877
www.lrcconsult.com

PROJECT DETAILS

JOURNAL SQUARE

49 & 85 CIVIC CENTER PLAZA
CITY OF POUGHKEESPIE
DUTCHESS COUNTY, NEW YORK

Design/Calcs	SMC	CAD File	DN19242602.dwg	Sheet No.	
Drawn	KFC	Project No.	19-2426		DN-2
Checked	KFC	Date	11-19-2025		
Approved	REM	Scale	NOTED		SHEET 7 OF 8

X:\JOBS\Jobs 2019\19-2426-Page Park 47-49 Civic Center\DWG\DN19242602.dwg 1/8/2026 1:20 PM Sturron

LXT-AF24-40-T4-15' Mounting Height
LXT-AF24-40-T4-HSS 12' Mounting Height

Streetworks

DESCRIPTION

The Lexington AF24 LED outdoor luminaire displays the old-fashioned charm of traditional lantern-type post top lighting, enhancing any setting with distinctive styling. As a decorative luminaire, the Lexington LED tastefully complements the architectural and environmental design of parks and roadways. It's patented AccuLED Optics™ technology delivers uniform and efficient illumination to pedestrian and roadway applications.

Catalog #		Type
Project		
Comments		Date
Prepared by		

SPECIFICATION FEATURES

Construction
TOP: Hinged die-cast aluminum top with cupola cover. SCREWS: Captive retaining screw. HOUSING: Die-cast aluminum base housing. Standard color is black. Other finish colors available. Consult your Streetworks representative. 1" ANSI wattage/source label.

Optics
Choice of four patented, high efficiency AccuLED Optics™ technology manufactured from injection-molded acrylic. Optics are precisely designed to shape the light output, maximizing efficiency and application spacing. AccuLED Optics technology, creates consistent distributions with the scalability to meet customized application requirements. Offered standard in 4000K (+/- 275K) CCT and minimum 70 CRI. Optional 3000K (70CRI) and 2700K (80 CRI). For the ultimate level of spill light control, an optional house-side shield accessory can be field or factory installed. Optics are IP66 enclosure rated. Offered open sided as a standard with four lens options.

Electrical
LED drivers mount to die-cast aluminum back housing for optimal heat sinking, operation efficacy, and prolonged life. Standard drivers feature electronic universal voltage (120-277V 50/60Hz), greater than 0.9 power factor, less than 20% harmonic distortion, and is suitable for operation in -40°C to 40°C ambient environments. 10 kV/10 kA common and differential mode and 10 kV MOV surge protection available.

Mounting
Self-aligning pole-top fitter fits 2-3/8" and 3" O.D. tenons. Square headed 1-1/4" polymer coated mounting bolts.

Finish
Cast components finished in a Super durable black TGIC polyester powder coat paint, 2.5 mil nominal thickness for superior protection against fade and wear. Optional colors include: bronze, grey and white. RAL and custom color matches available.

Warranty
Standard five-year warranty. Optional ten-year warranty, please see your Eaton Streetworks sales representative for more information.



LXF/LXT
LEXINGTON LED

AF24
LED

DECORATIVE POST TOP LUMINAIRE

DIMENSIONS

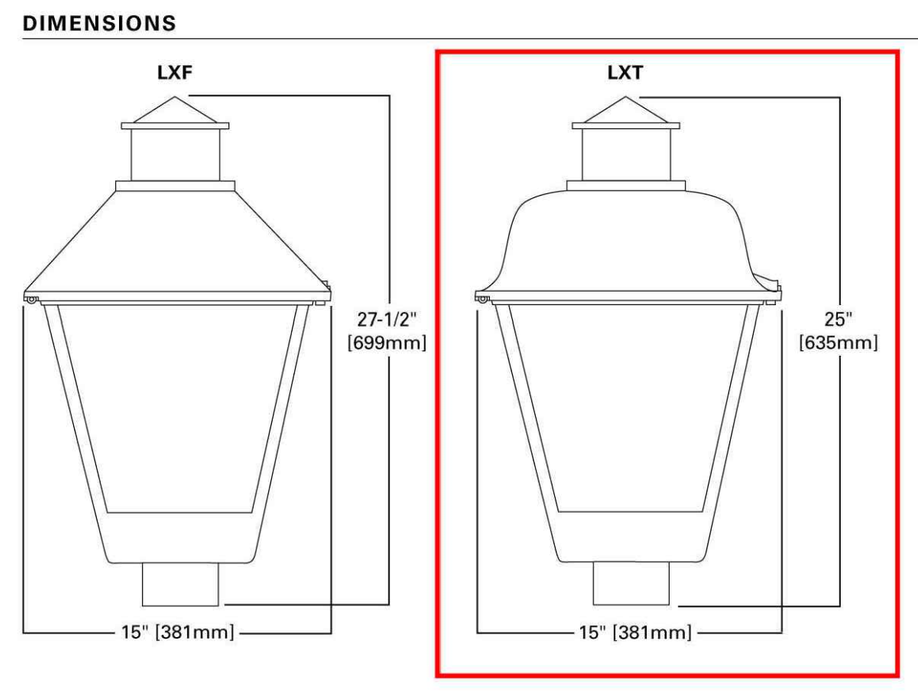

CERTIFICATION DATA
UL/cUL Listed
ISO 9001
IP66 Rated Optics
LM79 / LM80 Compliant

ENERGY DATA
Electronic LED Driver
>0.9 Power Factor
<20% Total Harmonic Distortion
120-277V 50/60Hz
-30°C Minimum Temperature
40°C Ambient Temperature Rating

EPA
Effective Projected Area: (Sq. Ft.)
1.7

SHIPPING DATA
Approximate Net Wt:
20.8 lbs. (9.4 kgs.)

EATON
Powering Business Worldwide

TD516039EN
April 16, 2019 2:31 PM

FREESTANDING POLE LIGHTS-T4 HHS MH 12'&15'

page 2

LXF/LXT LEXINGTON LED

POWER AND LUMENS

Light Engine		AF24-20	AF24-30	AF24-40	AF24-50	AF24-60	AF24-70	AF24-80	AF24-90	AF24-100
Nominal Power (Watts)		21	31	40	54	64	74	83	94	96
Wattage Label		20	30	40	50	60	70	80	90	100
Current (A) @120V		0.18	0.26	0.34	0.45	0.53	0.62	0.70	0.78	0.80
Current (A) @277V		--	0.12	0.15	0.21	0.24	0.28	0.31	0.35	0.35
Current (A) @347V		--	0.10	0.13	0.16	0.19	0.22	0.24	0.28	0.28
Current (A) @480V		--	0.07	0.09	0.13	0.14	0.17	0.18	0.21	0.21
Optics										
T2U	4000K	2,488	3,491	4,521	5,831	6,738	7,556	8,259	8,904	9,016
	BUG Rating	B1-U0-G1	B1-U0-G1	B2-U0-G2	B2-U0-G2	B2-U0-G2	B2-U0-G2	B2-U0-G2	B3-U0-G3	B3-U0-G3
	3000K	2,352	3,301	4,275	5,513	6,371	7,143	7,809	8,418	8,524
	BUG Rating	B1-U0-G1	B1-U0-G1	B1-U0-G1	B2-U0-G2	B2-U0-G2	B2-U0-G2	B2-U0-G2	B2-U0-G2	B2-U0-G2
T3	4000K	2,470	3,467	4,490	5,790	6,690	7,502	8,201	8,841	8,953
	BUG Rating	B1-U0-G1	B1-U0-G1	B1-U0-G1	B1-U0-G2	B1-U0-G2	B2-U0-G2	B2-U0-G2	B2-U0-G2	B2-U0-G2
	3000K	2,336	3,278	4,245	5,475	6,325	7,093	7,754	8,359	8,464
	BUG Rating	B1-U0-G1	B1-U0-G1	B1-U0-G1	B1-U0-G2	B1-U0-G2	B1-U0-G2	B2-U0-G2	B2-U0-G2	B2-U0-G2
SL3	4000K	2,391	3,354	4,344	5,603	6,474	7,260	7,936	8,556	8,663
	BUG Rating	B1-U0-G1	B1-U0-G1	B1-U0-G2	B1-U0-G2	B1-U0-G2	B1-U0-G2	B1-U0-G2	B2-U0-G2	B2-U0-G2
	3000K	2,261	3,172	4,108	5,298	6,121	6,864	7,503	8,088	8,191
	BUG Rating	B1-U0-G1	B1-U0-G1	B1-U0-G2	B1-U0-G2	B1-U0-G2	B1-U0-G2	B1-U0-G2	B1-U0-G2	B1-U0-G2
T4W	4000K	2,460	3,452	4,471	5,766	6,662	7,472	8,167	8,806	8,916
	BUG Rating	B1-U0-G1	B1-U0-G1	B1-U0-G2	B1-U0-G2	B1-U0-G2	B2-U0-G2	B2-U0-G2	B2-U0-G2	B2-U0-G2
	3000K	2,326	3,265	4,227	5,452	6,300	7,064	7,721	8,324	8,429
	BUG Rating	B1-U0-G1	B1-U0-G1	B1-U0-G2	B1-U0-G2	B1-U0-G2	B2-U0-G2	B2-U0-G2	B2-U0-G2	B2-U0-G2
5WQ	4000K	2,609	3,660	4,740	6,113	7,063	7,921	8,658	9,334	9,452
	BUG Rating	B2-U0-G1	B3-U0-G1	B3-U0-G1	B3-U0-G2	B3-U0-G2	B3-U0-G2	B4-U0-G2	B4-U0-G2	B4-U0-G2
	3000K	2,466	3,460	4,482	5,780	6,678	7,489	8,186	8,825	8,936
	BUG Rating	B2-U0-G1	B3-U0-G1	B3-U0-G1	B3-U0-G2	B3-U0-G2	B3-U0-G2	B3-U0-G2	B4-U0-G2	B4-U0-G2

ORDERING INFORMATION

Sample Number: LXF-AF24-20-D-U-T2U-10MSP-4N7-BK

Product Family [1]	Light Engine [2]	Wattage Bucket	Driver	Voltage	Distribution
LXF=Lexington **LXT**=Lexington w/Traditional Top	**AF24**=24 LED Light Engine	**20**=20W [3] **30**=30W **40**=40W **50**=50W **60**=60W **70**=70W **80**=80W **90**=90W **100**=100W	**D**=Dimming (0-10V) **5LTD**=DALI [4]	**U**=Universal (120-277V) **2**=120V [3] **8**=480V [5] **9**=347V	**T2U**=Type II Urban **T3**=Type III **SL3**=Type III w/ Spill Control **T4W**=Type IV Wide **5WQ**=Type V Square Wide

Options (Add as Suffix)	Color	Accessories (Order Separately)
10K=10kV UL 1499 Surge Protection Device **10MSP**=10kV MOV Surge Protection Device **7027**=70 CRI / 2700K CCT [6] **7030**=70 CRI / 3000K CCT [6] **8027**=80 CRI / 2700K CCT [6] **4**=NEMA Photocontrol Receptacle [7] **4N7**=NEMA 7-PIN Photocontrol Receptacle **A**=Refractive Lens Panels **CL**=Clear Lens **FL**=Frosted Lens **TL**=Textured Lens **S**=Snap Latches for Tool-less Light Replacement **J**=Factory Installed Ladder Rest **HSS**=House Side Shield [8] **HA**=High Ambient [9]	**BK**=Black **BZ**=Bronze **AP**=Grey **WH**=White	**TA1BK**=Decorative Ladder Rest for Field Installation (Black) **OA/RA1013**=Photocontrol Shorting Cap **OA/RA1014**=NEMA Photocontrol - 120V **OA/RA1016**=NEMA Photocontrol - Multi-Tap **OA1223**=10kV Surge Module Replacement **HS-LX-24**=Field Installed LX House Side Shield for AF24 [8]

NOTES:
1. Customer is responsible for engineering analysis to confirm pole and fixture compatibility for all applications. Refer to our white paper WP513001EN for additional support information.
2. Standard 4000K CCT and nominal 70 CRI.
3. AF24-20 only available in 120V only.
4. Only available in universal voltage, not available with AF24-90, AF24-100.
5. Only for use with 480V Wye systems. Per NEC, not for use with ungrounded systems, impedance grounded systems or corner grounded systems (commonly known as Three Phase Three Wire Delta, Three Phase High Leg Delta and Three Phase Corner Grounded Delta systems).
6. Use dedicated IES files for 3000K and 2700K when performing layouts. These files are published on the Lexington product page on the website.
7. If "4" selected, dimming functionality not available, leads will be capped.
8. HSS not available with 5WQ or SL3 distribution.
9. HA not available with AF24-100 if paired with HSS option.

EATON
Powering Business Worldwide

Eaton
1121 Highway 74 South
Peachtree City, GA 30269
P: 770-486-4800
www.eaton.com/lighting

Specifications and dimensions subject to change without notice.

TD516039EN
April 16, 2019 2:31 PM

FREESTANDING POLE LIGHTS-T4 HHS MH 12'&15'

34.18 · Technical amendments reserved

BEGA **66 655**

Wall luminaire IP 65

Project · Reference number Date

Product data sheet

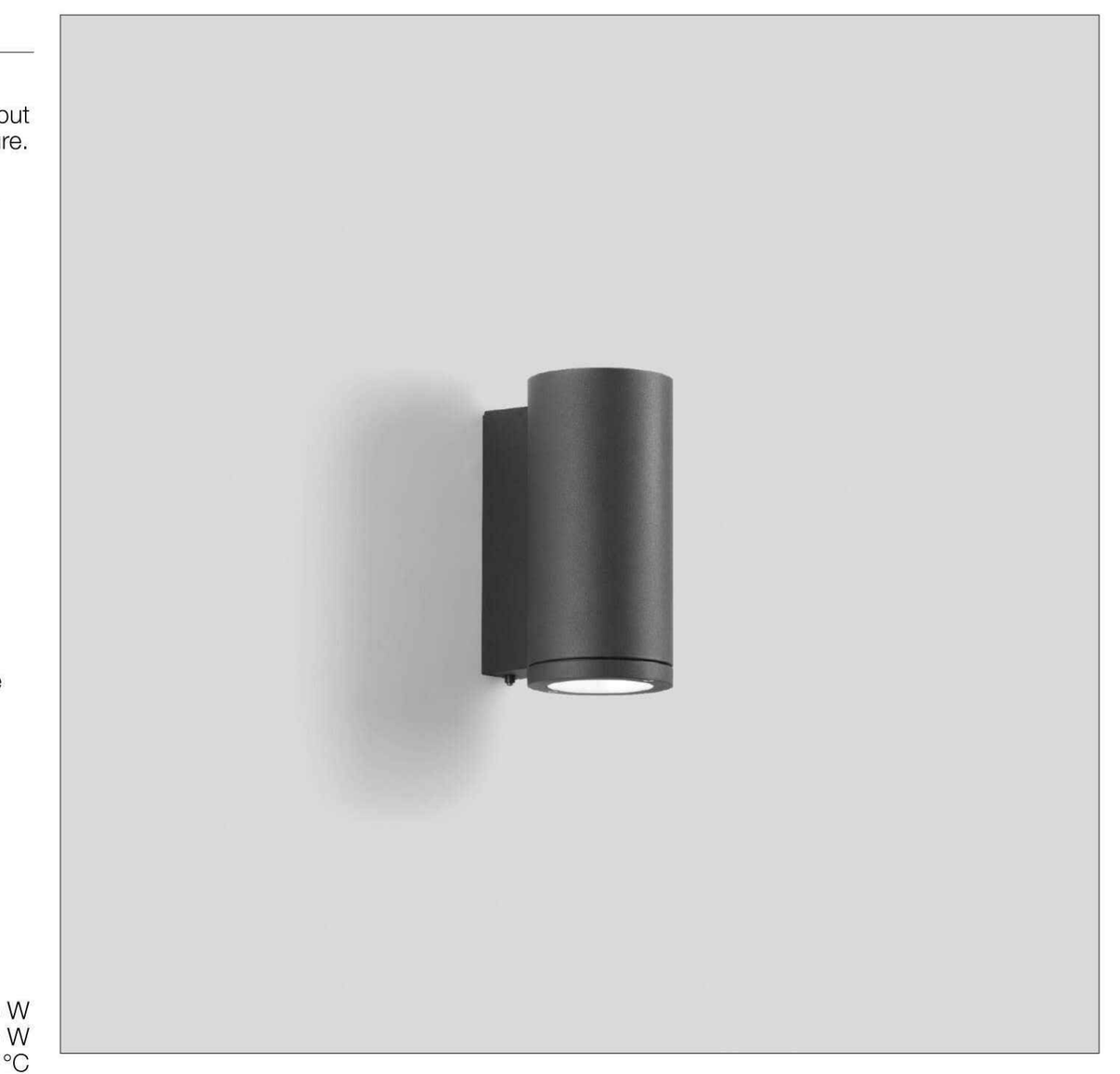

Application
LED wall luminaire with single-sided light output for illumination and design tasks in architecture. The luminaire can be installed with the light distribution opening upwards or downwards.

Product description
Luminaire made of aluminium alloy, aluminium and stainless steel
Clear safety glass
Silicone gasket
Reflector made of pure anodised aluminium
Mounting plate with 2 fixing holes ø 5.3 mm · 160 x 14 mm spacing
2 cable entries for through-wiring of mains supply cable ø 7-10.5 mm, max. 5G1.5□
Connecting terminal 2.5□ with plug connection
Earth conductor connection
LED power supply unit
220-240 V ∿ 0/50-60 Hz
DC 176-276 V
DALI controllable
A basic isolation exists between power cable and control line
Safety class I
Protection class IP 65
Dust-tight and protection against water jets
Impact strength IK09
Protection against mechanical impacts < 10 joule
– Safety mark
CE – Conformity mark
Weight: 2.0 kg

Lamp

Module connected wattage	7.9 W
Luminaire connected wattage	10 W
Rated temperature	t_a = 25 °C
Ambient temperature	$t_{a\ max}$ = 45 °C

On request we can offer you modifications for enviroments with higher temperatures as a customized product.

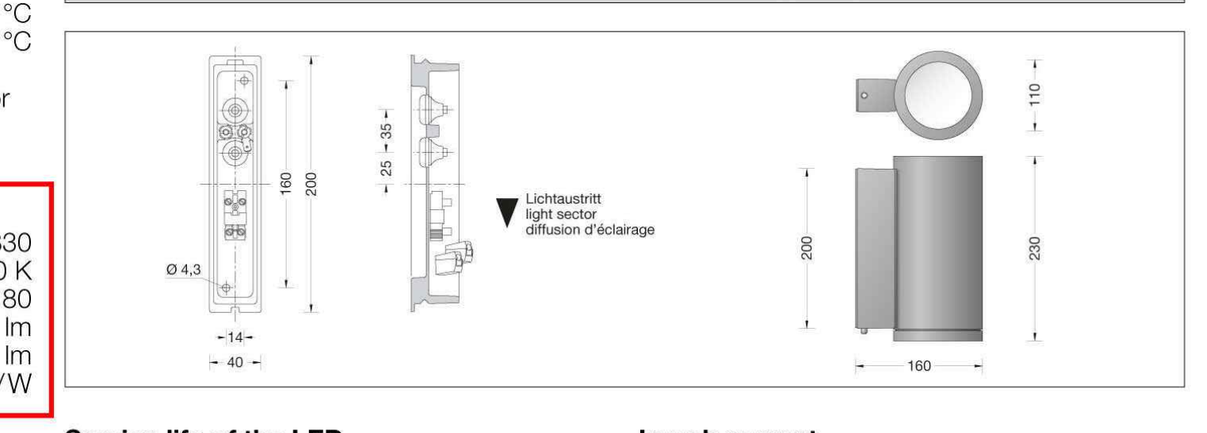

66 655 K3

Module designation	LED-0733/830
Colour temperature	3000 K
Colour rendering index	CRI > 80
Module luminous flux	1125 lm
Luminaire luminous flux	772 lm
Luminaire luminous efficiency	77,2 lm/W

66 655 K4

Module designation	LED-0733/840
Colour temperature	4000 K
Colour rendering index	CRI > 80
Module luminous flux	1185 lm
Luminaire luminous flux	813 lm
Luminaire luminous efficiency	81,3 lm/W

Light distribution

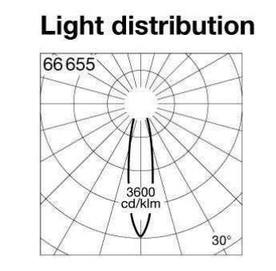

Service life of the LED
Ambient temperature t_a = 25 °C
– at 428,000h: L70B50

max. ambient temperature t_a = 45 °C
– at 127,000h: L70B50

Lighting technology
Half beam angle 21°
Luminaire data for the light planning program DIALux for outdoor lighting, street lighting and interior lighting as well as luminaire data in EULUMDAT and IES format are available on our website www.bega.com.

Inrush current
Inrush current: 12 A / 24.2 µs
Maximum number of luminaires of this type per miniature circuit breaker:
B10A: 50 luminaires
B16A: 50 luminaires
C10A: 50 luminaires
C16A: 50 luminaires

Article No. 66 655
LED colour temperature optionally 3000 K or 4000 K
3000 K – Article number + **K3**
4000 K – Article number + **K4**

Colour optionally graphite, white or silver
Graphite – Article number
White – Article number + **W**
Silver – Article number + **A**

BEGA Gantenbrink-Leuchten KG · Postfach 31 60 · 58689 Menden · info@bega.com · www.bega.com

BUILDING FACADE LIGHTING (WP)

TOTAL UNITS REQUIRED: ________

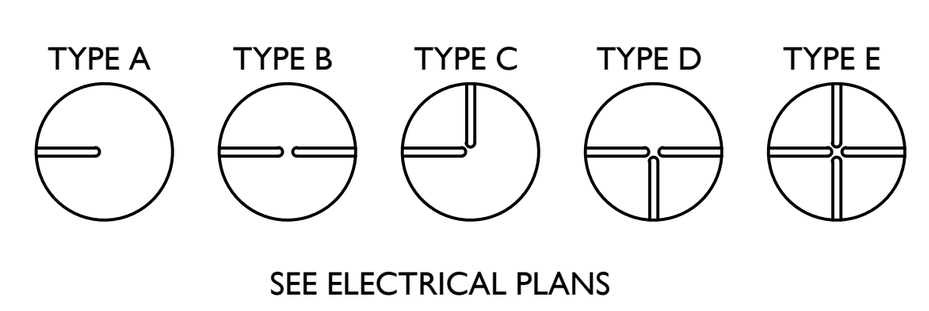

CONTRACTOR NOTE:
CONTRACTOR TO PROVIDE NUMBER OF EACH POLE BASE LAYOUT REQUIRED FOR ORDER. (PLEASE USE ABOVE SCHEMATIC)

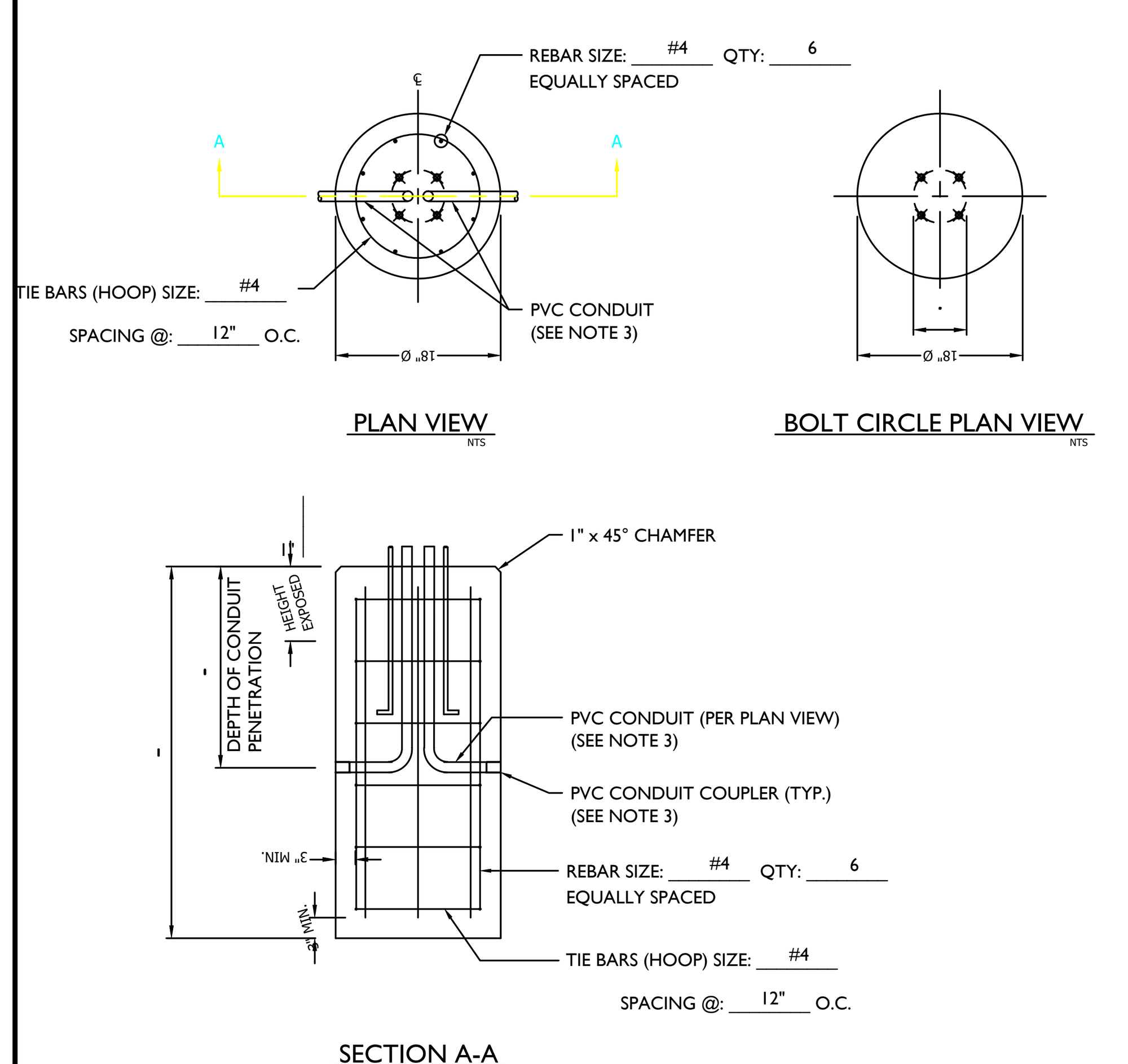

*POLE BASE INFO TABLE	
PVC CONDUIT SIZE:	
GROUND CONDUIT (IF REQUIRED):	
ANCHOR BOLT SIZE:	NONE
BOLT CIRCLE FOR ANCHORS:	NONE
BOLT/CONDUIT PROJECTION:	NONE

*NOTE: TABLE MUST BE COMPLETED PRIOR TO PRODUCTION RELEASE.

GENERAL NOTES:
1) CONCRETE TO TEST 4,000 PSI AT 28 DAYS.
2) REINFORCING STEEL PER ASTM A615, GRADE 60, UNCOATED BLACK BARS.
3) ANCHOR BOLTS, BOLT TEMPLATE AND CONDUIT TO BE SUPPLIED BY CONTRACTOR PRIOR TO FABRICATION AND CAST IN BY A&R.

CONTRACTOR NOTES/COMMENTS:
ANCHOR BOLTS TO BE DRILLED AND INSTALLED IN THE FIELD.

CONTACT: ______________________
PHONE: ______________________

1

NOTE: This form is also a cut sheet. By signing below, contractor approves release for production.

X ______________________

A&R CONCRETE PRODUCTS
276 Clove Road
Salisbury Mills, New York, 12577
www.arconcrete.com
845-562-0640

PRECAST EVCS BASE	DATE:
	REV.:
	DWN.BY: A&R LLC
CONTRACTOR:	DWG. NO.: LPB18

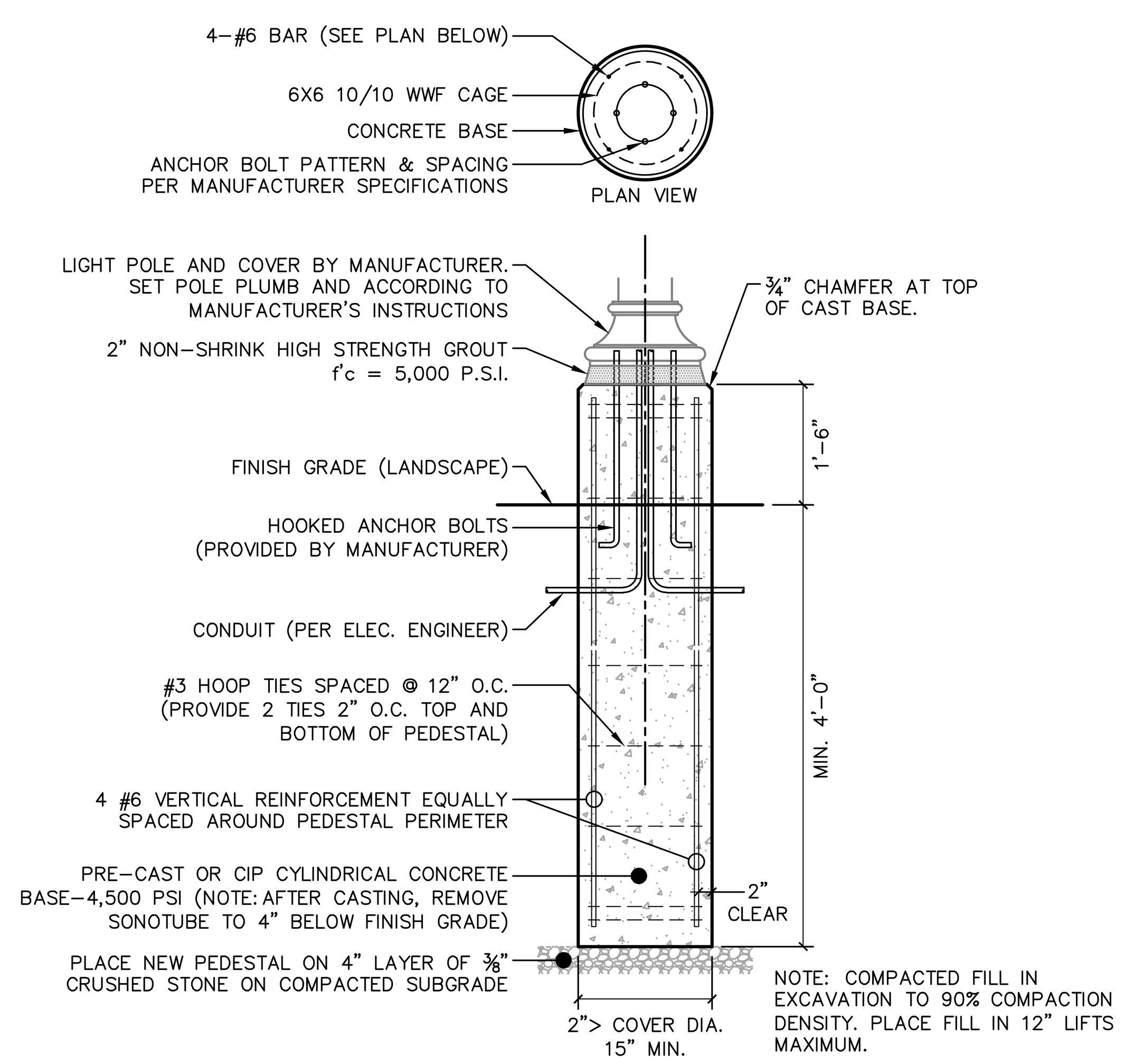

NOTE: COMPACTED FILL IN EXCAVATION TO 90% COMPACTION DENSITY. PLACE FILL IN 12" LIFTS MAXIMUM.

2 CONC. LIGHT POLE BASE-ROUND
SCALE: 1/2" = 1'–0"



#	Date	Description
1.	2026–01–09	REVISED PER LANDSCAPE COMMENTS

Revisions

LRC Engineering & Surveying
- Civil Engineering
- Land Surveying
- Landscape Architecture
- Land Planning
- Laser Scanning & BIM
- Subsurface Utility Engineering

Land Resource Consultants Engineering & Surveying, LLC
Loureiro NY, P.C.
85 Civic Center Plaza, Suite 204
Poughkeepsie NY 12601
(845) 243-2880
160 West Street, Suite E
Cromwell, CT 06416
(860) 635-2877
www.lrcconsult.com

PROJECT DETAILS

JOURNAL SQUARE

49 & 85 CIVIC CENTER PLAZA
CITY OF POUGHKEEPSIE
DUTCHESS COUNTY, NEW YORK

Design/Calcs	SMC	CAD File	DN19242603.dwg	Sheet No.
Drawn	KFC	Project No.	19–2426	DN-3
Checked	KFC	Date	11–19–2025	
Approved	REM	Scale	NOTED	SHEET 8 OF 8

X:\JOBS\Jobs 2019\19–2426–Page Park 47–49 Civic Center\DWG\DN19242603.dwg 1/8/2026 1:20 PM SCurran

Short Environmental Assessment Form
Part 1 - Project Information

Instructions for Completing

Part 1 – Project Information. The applicant or project sponsor is responsible for the completion of Part 1. Responses become part of the application for approval or funding, are subject to public review, and may be subject to further verification. Complete Part 1 based on information currently available. If additional research or investigation would be needed to fully respond to any item, please answer as thoroughly as possible based on current information.

Complete all items in Part 1. You may also provide any additional information which you believe will be needed by or useful to the lead agency; attach additional pages as necessary to supplement any item.

Part 1 – Project and Sponsor Information

Name of Action or Project:
Journal Square

Project Location (describe, and attach a location map):
49 & 85 Civic Center Plaza, Poughkeepsie, NY 12601 (see Appendix A)

Brief Description of Proposed Action:
Reconfiguration of an existing parking lot.

Name of Applicant or Sponsor:	Telephone: 845.594.1055
Page Park Associates LLC and KARC Planning Consultants	E-Mail: kelly@karcpc.com

Address:
PO Box 924

City/PO:	State:	Zip Code:
Poughkeepsie	NY	12601

	NO	YES
1. Does the proposed action only involve the legislative adoption of a plan, local law, ordinance, administrative rule, or regulation? If Yes, attach a narrative description of the intent of the proposed action and the environmental resources that may be affected in the municipality and proceed to Part 2. If no, continue to question 2.	☑	☐
2. Does the proposed action require a permit, approval or funding from any other government Agency? If Yes, list agency(s) name and permit or approval: City of Poughkeepsie Planning Board and Poughkeepsie City Council	☐	☑

3. a. Total acreage of the site of the proposed action? 3.608 acres
   b. Total acreage to be physically disturbed? 0.459 acres
   c. Total acreage (project site and any contiguous properties) owned or controlled by the applicant or project sponsor? 3.608 acres

4. Check all land uses that occur on, are adjoining or near the proposed action:

5. ☑ Urban ☐ Rural (non-agriculture) ☐ Industrial ☑ Commercial ☐ Residential (suburban)
   ☐ Forest ☐ Agriculture ☐ Aquatic ☑ Other(Specify): Residential (urban); Civic
   ☐ Parkland

	NO	YES	N/A
5. Is the proposed action,			
a. A permitted use under the zoning regulations?	☐	☑	☐
b. Consistent with the adopted comprehensive plan?	☐	☑	☐

	NO	YES
6. Is the proposed action consistent with the predominant character of the existing built or natural landscape?	☐	☑

	NO	YES
7. Is the site of the proposed action located in, or does it adjoin, a state listed Critical Environmental Area?		
If Yes, identify: _____	☑	☐

	NO	YES
8. a. Will the proposed action result in a substantial increase in traffic above present levels?	☑	☐
b. Are public transportation services available at or near the site of the proposed action?	☐	☑
c. Are any pedestrian accommodations or bicycle routes available on or near the site of the proposed action?	☐	☑

	NO	YES
9. Does the proposed action meet or exceed the state energy code requirements?		
If the proposed action will exceed requirements, describe design features and technologies: _____ _____	☐	☑

	NO	YES
10. Will the proposed action connect to an existing public/private water supply?		
If No, describe method for providing potable water: _____ No potable water connection needed for this project. _____	☑	☐

	NO	YES
11. Will the proposed action connect to existing wastewater utilities?		
If No, describe method for providing wastewater treatment: _____ No wastewater connections needed for this project. _____	☑	☐

	NO	YES
12. a. Does the project site contain, or is it substantially contiguous to, a building, archaeological site, or district which is listed on the National or State Register of Historic Places, or that has been determined by the Commissioner of the NYS Office of Parks, Recreation and Historic Preservation to be eligible for listing on the State Register of Historic Places?	☐	☑
Poughkeepsie Journal Building b. Is the project site, or any portion of it, located in or adjacent to an area designated as sensitive for archaeological sites on the NY State Historic Preservation Office (SHPO) archaeological site inventory?	☑	☐

	NO	YES
13. a. Does any portion of the site of the proposed action, or lands adjoining the proposed action, contain wetlands or other waterbodies regulated by a federal, state or local agency?	☑	☐
b. Would the proposed action physically alter, or encroach into, any existing wetland or waterbody?	☑	☐
If Yes, identify the wetland or waterbody and extent of alterations in square feet or acres: _____ _____ _____		

14. Identify the typical habitat types that occur on, or are likely to be found on the project site. Check all that apply:

☐ Shoreline ☐ Forest ☐ Agricultural/grasslands ☐ Early mid-successional

☐ Wetland ☑ Urban ☐ Suburban

	NO	YES
15. Does the site of the proposed action contain any species of animal, or associated habitats, listed by the State or Federal government as threatened or endangered?	☑	☐
16. Is the project site located in the 100-year flood plan?	☑	☐
17. Will the proposed action create storm water discharge, either from point or non-point sources?	☐	☑
If Yes,		
a. Will storm water discharges flow to adjacent properties?	☐	☑
b. Will storm water discharges be directed to established conveyance systems (runoff and storm drains)?	☐	☑
If Yes, briefly describe: Project includes connections to existing catch basins and dry wells, as well as the creation of new green spaces to help mitigate storm water runoff.		
18. Does the proposed action include construction or other activities that would result in the impoundment of water or other liquids (e.g., retention pond, waste lagoon, dam)? If Yes, explain the purpose and size of the impoundment:	☑	☐
19. Has the site of the proposed action or an adjoining property been the location of an active or closed solid waste management facility? If Yes, describe:	☑	☐
20. Has the site of the proposed action or an adjoining property been the subject of remediation (ongoing or completed) for hazardous waste? If Yes, describe: Spill #9112181 (49 Civic Center Plaza) closed as of 03/01/1992. Spill #9512935 (85 Civic Center Plaza) closed as of 01/16/1996. See Appendix B and Appendix C.	☐	☑

I CERTIFY THAT THE INFORMATION PROVIDED ABOVE IS TRUE AND ACCURATE TO THE BEST OF MY KNOWLEDGE

Applicant/sponsor/name: Kelly Libolt Date: 11/19/2025

Signature: KLibolt Title:

PRINT FORM

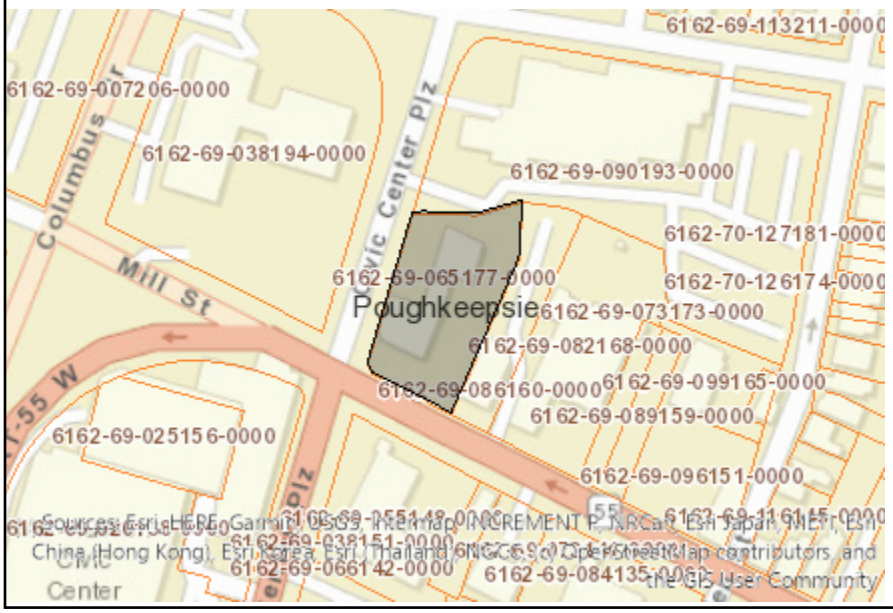

Disclaimer: The EAF Mapper is a screening tool intended to assist project sponsors and reviewing agencies in preparing an environmental assessment form (EAF). Not all questions asked in the EAF are answered by the EAF Mapper. Additional information on any EAF question can be obtained by consulting the EAF Workbooks. Although the EAF Mapper provides the most up-to-date digital data available to DEC, you may also need to contact local or other data sources to confirm data provided by the Mapper or to obtain data not provided by the Mapper.



Part 1 / Question 7 [Critical Environmental Area]	No
Part 1 / Question 12a [National or State Register of Historic Places or State Eligible Sites]	Yes
Part 1 / Question 12b [Archeological Sites]	No
Part 1 / Question 13a [Wetlands or Other Regulated Waterbodies]	Digital mapping data are not available or are incomplete. Refer to EAF Workbook.
Part 1 / Question 15 [Threatened or Endangered Animal]	No
Part 1 / Question 16 [100 Year Flood Plain]	No
Part 1 / Question 20 [Remediation Site]	Yes

Appendix A

ParcelAccess | Property Details

FINAL ROLL

Parcel Number
131300-6162-69-065177-0000

Parcel Location
49 Civic Center Plz

Municipality
Poughkeepsie City

Owner Name
Journal Plaza LLC *(Primary)*

Primary Owner Mailing Address
PO Box 792
Poughkeepsie, NY 12602



Parcel Details

Lot Size (acres):	0.808 AC (S)	**Split Town:**	-
Filed Map:	12682	**Agri. District:**	None
File Lot #:	-	**School District:**	(131300) Poughkeepsie City SD
Land Use Class:	(330) Vacant comm		

Assessment Information (Current)

Land:	Total:	County Taxable:	Town Taxable:	School Taxable:	Village Taxable:
$64,800	$64,800	$64,800	$64,800	$64,800	$0

Tax Code:	Roll Section:	Uniform %:	Full Market Value:
N (Non-Homestead)	1 (Taxable)	100	$64,800

Tentative Roll:	Final Roll:	Valuation Date:
5/1/2025	7/1/2025	7/1/2024

Last Sale / Transfer

Sale Price:	Sale Date:	Deed Book:	Deed Page:	Sale Condition:	No. Parcels:
$0	9/7/2021	22021	4485	B	1

Site Information

Site 1

Water Supply:	Sewer Type:	Desirability:	Zoning Code: *	Used As:
(3) Comm/public	(3) Comm/public	(3) Normal		(Z98) Non-contrib

Special District Information

Special District: GP000

Special District Name:	Primary Units:	Ad Valorem Value:
Greater Pok Lib Dist	0	$64,800

ABSOLUTELY NO ACCURACY OR COMPLETENESS GUARANTEE IS IMPLIED OR INTENDED. ALL INFORMATION ON THIS MAP IS SUBJECT TO CHANGE BASED ON A COMPLETE TITLE SEARCH OR FIELD SURVEY.

***Please see the Dutchess County Zoning Map for the most up-to-date zoning information.**

This report was produced using ParcelAccess on 10/2/2025. Developed and maintained by OCIS - Dutchess County, NY.

Appendix B

An official website of New York State.
Here's how you know

NYS Department of Environmental Conservation
DER Environmental Remediation Databases

Details from Spill Incidents Database Search

Spill Record

Administrative Information

DEC Region: 3
Spill Number: 9112181

Spill Date/Time

Spill Date: 02/27/1992
Spill Time: 08:30:00 PM
Call Received Date: 02/27/1992
Call Received Time: 08:53:00 PM

Location

Spill Name: SUPER SUDS
Address: 49 CIVIC CENTER PLAZA
City: POUGHKEEPSIE
County: Dutchess

Spill Description

Material Spilled	Amount Spilled	Resource Affected
#2 fuel oil	50 Gal.	Soil

Cause: Deliberate

Source: Commercial/Industrial

Waterbody:

Record Close

Date Spill Closed: 03/01/1992

"Date Spill Closed" means the date the spill case was closed by the case manager in the Department of Environmental Conservation (the Department). The spill case was closed because either; a) the records and data submitted indicate that the necessary cleanup and removal actions have been completed and no further remedial activities are necessary, or b) the case was closed for administrative reasons (e.g., multiple reports of a single spill consolidated into a single spill number). The Department however reserves the right to require additional remedial work in relation to the spill, if in the future it determines that further action is necessary.

If you have questions about this reported incident, please contact the Regional Office where the incident occurred.

Refine This Search | Return To Results

DER Environmental Remediation Databases Privacy Policy Terms of Service

- AgenciesApp DirectoryCountiesEventsProgramsServices

Translate

Translation Services

This page is available in other languages

- English
- Español
- 中文
- 繁體中文
- Русский
- יידיש
- বাংলা
- 한국어
- Kreyòl Ayisyen

- Italiano
- العربية
- Polski
- Français
- اردو

Appendix C

Details from Spill Incidents Database Search

Spill Record

DEC Region: 3
Spill Number: 9512935

Administrative Information

Spill Date: 08/31/1995
Spill Time: 12:00:00 PM
Call Received Date: 01/10/1996
Call Received Time: 12:00:00 PM

Spill Date/Time

[redacted]

Location

City: POUGHKEEPSIE
County: Dutchess

Spill Description

An official website of New York State.
Here's how you know

NEW YORK STATE

NYS Department of Environmental Conservation
DER Environmental Remediation Databases

Cause: Unknown

Source: Commercial/Industrial

Waterbody:

Record Close

Date Spill Closed: 01/16/1996

"Date Spill Closed" means the date the spill case was closed by the case manager in the Department of Environmental Conservation (the Department). The spill case was closed because either; a) the records and data submitted indicate that the necessary cleanup and removal actions have been completed and no further remedial activities are necessary, or b) the case was closed for administrative reasons (e.g., multiple reports of a single spill consolidated into a single spill number). The Department however reserves the right to require additional remedial work in relation to the spill, if in the future it determines that further action is necessary.

If you have questions about this reported incident, please contact the Regional Office where the incident occurred.

Refine This Search | Return To Results

- Italiano
- العربية
- Polski
- Français
- اردو

THE CITY OF POUGHKEEPSIE
NEW YORK
PLANNING & ZONING
62 CIVIC CENTER PLAZA, 2ND FLOOR
POUGHKEEPSIE, NY 12601
Phone: (845) 451-4055 Fax: (845) 451-4006

June 24, 2020

Page Park Associates
PO Box 792
Poughkeepsie, NY 12602

47-49 CIVIC CENTER PLAZA - NEW CONSTRUCTION
Construction of a new 22,000 (+/-) square foot four (4) story office building and façade renovations to existing single story commercial building. Owner/Applicant: Journal Plaza, LLC/Taconic Realty/Page Park Associates (Darin Page); Consultant: LRC Group (Kelly Libolt); Grid #6162-69-061166 and 065177; Zoning Districts: PID-CC and C-2; File#2020-001

Dear Mr. Page:

This letter is to inform you of the action taken at the Planning Board meeting of May 19, 2020 regarding the above referenced application for site plan approval. The Board adopted a negative declaration relative to the New York State Environmental Quality Review Act and with majority vote approved the application subject to the following conditions:

- Area of disturbance is shown as 0.94 acres. To ensure 1 acre of disturbance is not exceeded provide construction fence or silt fence at perimeter of area of disturbance.
- Indicate tapping valve is to be right open on UT-1. Provide additional curb valve in sidewalk adjacent to curb. Indicate curb valve is to be right open.
- Include note on site plan indicating any curbs or sidewalks within City ROW damaged by construction shall be replaced per City standards. In addition to the areas shown on OP-1 it will be necessary to replace the sidewalk behind new curb sections. An existing curb cut exists south of 47 Civic Center Plaza. The granite curb will need to be reset to 6" reveal and sidewalk behind curb replaced. Please add this repair area to OP-1. Concrete is broken south of existing northern curb cut around sign and north of existing southern curb cut. Replace affected sidewalk panels.
- Upon completion of the project, prior to the issuance of the final certificate of occupancy, an as-built site plan set shall be submitted to the Planning Department for certification of compliance with the approval

Please bring two full size copies of the plan to the Planning Department to obtain the Planning Board stamp of approval and all required sign-offs. One set will be retained by the Planning Department and the other set will be returned to you to copy as necessary to apply for required permits. This site plan approval is valid for a period of one year for purposes of obtaining building permits. Upon application, the Planning Board may extend the validity of the approval, one time, for a period not to exceed one year.

If you have any questions regarding this decision letter, please do not hesitate to contact Planning Director Natalie Quinn at 845-451-4047.

Sincerely,

Daniel McCabe
Acting Chairman, Planning Board

THE CITY OF POUGHKEEPSIE
NEW YORK
PLANNING & ZONING
62 CIVIC CENTER PLAZA, 2ND FLOOR
POUGHKEEPSIE, NY 12601
Phone: (845) 451-4055 Fax: (845) 451-4006

June 24, 2020

Page Park Associates
PO Box 792
Poughkeepsie, NY 12602

47-49 CIVIC CENTER PLAZA - NEW CONSTRUCTION
Construction of a new 22,000 (+/-) square foot four (4) story office building and façade renovations to existing single story commercial building. Owner/Applicant: Journal Plaza, LLC/Taconic Realty/Page Park Associates (Darin Page); Consultant: LRC Group (Kelly Libolt); Grid #6162-69-061166 and 065177; Zoning Districts: PID-CC and C-2; File#2020-001

Dear Mr. Page:

This letter is to inform you of the action taken at the Planning Board meeting of May 19, 2020 regarding the above referenced application for site plan approval. The Board adopted a negative declaration relative to the New York State Environmental Quality Review Act and with majority vote approved the application subject to the following conditions:

- Area of disturbance is shown as 0.94 acres. To ensure 1 acre of disturbance is not exceeded provide construction fence or silt fence at perimeter of area of disturbance.
- Indicate tapping valve is to be right open on UT-1. Provide additional curb valve in sidewalk adjacent to curb. Indicate curb valve is to be right open.
- Include note on site plan indicating any curbs or sidewalks within City ROW damaged by construction shall be replaced per City standards. In addition to the areas shown on OP-1 it will be necessary to replace the sidewalk behind new curb sections. An existing curb cut exists south of 47 Civic Center Plaza. The granite curb will need to be reset to 6" reveal and sidewalk behind curb replaced. Please add this repair area to OP-1. Concrete is broken south of existing northern curb cut around sign and north of existing southern curb cut. Replace affected sidewalk panels.
- Upon completion of the project, prior to the issuance of the final certificate of occupancy, an as-built site plan set shall be submitted to the Planning Department for certification of compliance with the approval

Please bring two full size copies of the plan to the Planning Department to obtain the Planning Board stamp of approval and all required sign-offs. One set will be retained by the Planning Department and the other set will be returned to you to copy as necessary to apply for required permits. This site plan approval is valid for a period of one year for purposes of obtaining building permits. Upon application, the Planning Board may extend the validity of the approval, one time, for a period not to exceed one year.

If you have any questions regarding this decision letter, please do not hesitate to contact Planning Director Natalie Quinn at 845-451-4047.

Sincerely,

Daniel McCabe
Acting Chairman, Planning Board

Short Environmental Assessment Form
Part 1 - Project Information

Instructions for Completing

Part 1 – Project Information. The applicant or project sponsor is responsible for the completion of Part 1. Responses become part of the application for approval or funding, are subject to public review, and may be subject to further verification. Complete Part 1 based on information currently available. If additional research or investigation would be needed to fully respond to any item, please answer as thoroughly as possible based on current information.

Complete all items in Part 1. You may also provide any additional information which you believe will be needed by or useful to the lead agency; attach additional pages as necessary to supplement any item.

Part 1 – Project and Sponsor Information

Name of Action or Project:

Journal Square

Project Location (describe, and attach a location map):

47-49 Civic Center Plaza & Portion of 85 Civic Center Plaza

Brief Description of Proposed Action:

Construction of an approximately 20,000 square foot four (4) story building in the place of a prior one (1) story commercial building (4,800 sq. ft.) on 49 Civic Center Plaza

A facade renovation and addition of 760 square feet to the existing building located at 47 Civic Center Plaza

Improvements to the traffic circulation at the property to include the elimination of two (2) existing curb cuts (1) on Mill Street and (2) Civic Center Plaza, modification of an existing ingress/egress on Mill Street to an egress only.

Lot Line Alternation between 85 Civic Center Plaza and 49 Civic Center Plaza

Name of Applicant or Sponsor:	Telephone: 845.471.0191
Page Park Associates	E-Mail: kelly@pageparkassociates.com

Address:		
PO Box 792		
City/PO: Poughkeepsie	State: New York	Zip Code: 12602

	NO	YES
1. Does the proposed action only involve the legislative adoption of a plan, local law, ordinance, administrative rule, or regulation? If Yes, attach a narrative description of the intent of the proposed action and the environmental resources that may be affected in the municipality and proceed to Part 2. If no, continue to question 2.	☐	☑
2. Does the proposed action require a permit, approval or funding from any other government Agency? If Yes, list agency(s) name and permit or approval: City ZBA, possible area variances	☐	☑

3. a. Total acreage of the site of the proposed action? 3.08+.35+.36 acres
   b. Total acreage to be physically disturbed? 0.94 acres acres
   c. Total acreage (project site and any contiguous properties) owned or controlled by the applicant or project sponsor? 3.79 acres

4. Check all land uses that occur on, are adjoining or near the proposed action:

5. ☑ Urban ☐ Rural (non-agriculture) ☐ Industrial ☑ Commercial ☐ Residential (suburban)
   ☐ Forest ☐ Agriculture ☐ Aquatic ☐ Other(Specify):
   ☐ Parkland

	NO	YES	N/A
5. Is the proposed action,			
a. A permitted use under the zoning regulations?	☐	☑	☐
b. Consistent with the adopted comprehensive plan?	☐	☑	☐

	NO	YES
6. Is the proposed action consistent with the predominant character of the existing built or natural landscape?	☐	☑

	NO	YES
7. Is the site of the proposed action located in, or does it adjoin, a state listed Critical Environmental Area?		
If Yes, identify: _____	☑	☐

	NO	YES
8. a. Will the proposed action result in a substantial increase in traffic above present levels?	☑	☐
b. Are public transportation services available at or near the site of the proposed action?	☐	☑
c. Are any pedestrian accommodations or bicycle routes available on or near the site of the proposed action?	☐	☑

	NO	YES
9. Does the proposed action meet or exceed the state energy code requirements?		
If the proposed action will exceed requirements, describe design features and technologies: _____ _____	☐	☑

	NO	YES
10. Will the proposed action connect to an existing public/private water supply?		
If No, describe method for providing potable water: _____ _____	☐	☑

	NO	YES
11. Will the proposed action connect to existing wastewater utilities?		
If No, describe method for providing wastewater treatment: _____ _____	☐	☑

	NO	YES
12. a. Does the project site contain, or is it substantially contiguous to, a building, archaeological site, or district which is listed on the National or State Register of Historic Places, or that has been determined by the Commissioner of the NYS Office of Parks, Recreation and Historic Preservation to be eligible for listing on the State Register of Historic Places?	☐	☑
b. Is the project site, or any portion of it, located in or adjacent to an area designated as sensitive for archaeological sites on the NY State Historic Preservation Office (SHPO) archaeological site inventory?	☐	☑

	NO	YES
13. a. Does any portion of the site of the proposed action, or lands adjoining the proposed action, contain wetlands or other waterbodies regulated by a federal, state or local agency?	☑	☐
b. Would the proposed action physically alter, or encroach into, any existing wetland or waterbody?	☐	☐
If Yes, identify the wetland or waterbody and extent of alterations in square feet or acres: _____ _____ _____		

14. Identify the typical habitat types that occur on, or are likely to be found on the project site. Check all that apply:

☐ Shoreline ☐ Forest ☐ Agricultural/grasslands ☐ Early mid-successional

☐ Wetland ☑ Urban ☐ Suburban

	NO	YES
15. Does the site of the proposed action contain any species of animal, or associated habitats, listed by the State or Federal government as threatened or endangered?	☑	☐
16. Is the project site located in the 100-year flood plan?	☑	☐
17. Will the proposed action create storm water discharge, either from point or non-point sources?	☐	☑
If Yes,		
a. Will storm water discharges flow to adjacent properties?	☑	☐
b. Will storm water discharges be directed to established conveyance systems (runoff and storm drains)?	☐	☑
If Yes, briefly describe:		
18. Does the proposed action include construction or other activities that would result in the impoundment of water or other liquids (e.g., retention pond, waste lagoon, dam)?	☑	☐
If Yes, explain the purpose and size of the impoundment:		
19. Has the site of the proposed action or an adjoining property been the location of an active or closed solid waste management facility?	☑	☐
If Yes, describe:		
20. Has the site of the proposed action or an adjoining property been the subject of remediation (ongoing or completed) for hazardous waste?	☑	☐
If Yes, describe:		

I CERTIFY THAT THE INFORMATION PROVIDED ABOVE IS TRUE AND ACCURATE TO THE BEST OF MY KNOWLEDGE

Applicant/sponsor/name: Kelly Libolt Date: 11.04.19 amended 01.2020

Signature: KLibolt Title: Applicant

PRINT FORM

Agency Use Only [If applicable]

Project: Journal Square

Date: 5/12/2020

Short Environmental Assessment Form
Part 2 - Impact Assessment

Part 2 is to be completed by the Lead Agency.
Answer all of the following questions in Part 2 using the information contained in Part 1 and other materials submitted by the project sponsor or otherwise available to the reviewer. When answering the questions the reviewer should be guided by the concept "Have my responses been reasonable considering the scale and context of the proposed action?"

	No, or small impact may occur	Moderate to large impact may occur
1. Will the proposed action create a material conflict with an adopted land use plan or zoning regulations?	☑	☐
2. Will the proposed action result in a change in the use or intensity of use of land?	☑	☐
3. Will the proposed action impair the character or quality of the existing community?	☑	☐
4. Will the proposed action have an impact on the environmental characteristics that caused the establishment of a Critical Environmental Area (CEA)?	☑	☐
5. Will the proposed action result in an adverse change in the existing level of traffic or affect existing infrastructure for mass transit, biking or walkway?	☑	☐
6. Will the proposed action cause an increase in the use of energy and it fails to incorporate reasonably available energy conservation or renewable energy opportunities?	☑	☐
7. Will the proposed action impact existing: a. public / private water supplies?	☑	☐
b. public / private wastewater treatment utilities?	☑	☐
8. Will the proposed action impair the character or quality of important historic, archaeological, architectural or aesthetic resources?	☑	☐
9. Will the proposed action result in an adverse change to natural resources (e.g., wetlands, waterbodies, groundwater, air quality, flora and fauna)?	☑	☐
10. Will the proposed action result in an increase in the potential for erosion, flooding or drainage problems?	☑	☐
11. Will the proposed action create a hazard to environmental resources or human health?	☑	☐

PRINT FORM

Agency Use Only [If applicable]

Project: Journal Square

Date: 5/12/2020

Short Environmental Assessment Form
Part 3 Determination of Significance

For every question in Part 2 that was answered "moderate to large impact may occur", or if there is a need to explain why a particular element of the proposed action may or will not result in a significant adverse environmental impact, please complete Part 3. Part 3 should, in sufficient detail, identify the impact, including any measures or design elements that have been included by the project sponsor to avoid or reduce impacts. Part 3 should also explain how the lead agency determined that the impact may or will not be significant. Each potential impact should be assessed considering its setting, probability of occurring, duration, irreversibility, geographic scope and magnitude. Also consider the potential for short-term, long-term and cumulative impacts.

The project entails new construction of a four-story office building at 49 Civic Center Plaza and facade renovations to the existing one-story building located at 47 Civic Center Plaza. The site(s) is located in a highly urban area of the community, but is also surrounded by an number of historic and prominent institutional buildings

The proposed project will result in a change in intensity of use of the land through the demolition of an existing one-story building (work completed) and the construction of a four-story building in it's place. However, the increase in density / intensity of use is in line with the city's adopted zoning, and is compatible with existing community character and historic resources. A visual analysis was prepared and reviewed by the Board to assess visual impacts to the neighboring historic Poughkeepsie Journal clock tower. Additionally, upon review and recommendation of the architectural consultant to the Planning Board, Mass Design Group, modifications were made to the proposed facade materials and privately-owned public space (small seating area along Civic Center Plaza) to improve compatibility between the proposed new construction and the neighboring histrioric resources, notably the Poughkeepsie Journal and Post Office.

Regarding whether or not the proposed project will result in an adverse change in the existing level of traffic or affect existing infrastructure for mass transit, biking or walking, a traffic analysis was completed by Maser Consulting P.A., dated November 19, 2019. Additionally, as a result of consultation with NYS DOT modifications were made to the site plan to convert the existing curb cut on Mill Street to serve as an entrance-only driveway. The applicant has also agreed to make repairs to municipal sidewalks along Mansion Street, and has responded to Dutchess County Planning Department's requests for improved internal pedestrian infrastructure via additional walkways and crosswalks.

The applicant's Part 1 EAF incorrectly stated that the proposed project site is not adjoining property that has been the subject of remediation for hazardous waste. The adjoining site is located at 55 Garden Street- All lead resulting from the abatement was containerized and properly disposed off-site.

☐ Check this box if you have determined, based on the information and analysis above, and any supporting documentation, that the proposed action may result in one or more potentially large or significant adverse impacts and an environmental impact statement is required.

☑ Check this box if you have determined, based on the information and analysis above, and any supporting documentation, that the proposed action will not result in any significant adverse environmental impacts.

City of Poughkeepsie Planning Board	5/12/20
Name of Lead Agency	Date
Dan McCabe	Vice Chair, Planning Board
Print or Type Name of Responsible Officer in Lead Agency	Title of Responsible Officer
Signature of Responsible Officer in Lead Agency	Signature of Preparer (if different from Responsible Officer)

PRINT FORM

Dutchess County Department of Planning and Development

Fax Info Only		
	To	Date #pgs
	Co./Dept.	From
	Fax #	Phone #

239 Planning/Zoning Referral - Exemption Communities

Please Fill in this section

Municipality: **City of Poughkeepsie**

Referring Agency: **Planning Board**

Tax Parcel Numbers(s): **0651770000, 0901930000**

Project Name: **49 & 85 Civic Center Plaza**

Applicant: **Journal Plaza LLC / Page Park Associates LLC**

Address of Property: **49 Civic Center Plz, Poughkeepsie, NY 12601**

Exempt Actions:*
239 Review is NOT Required

- Administrative Amendments (fees, procedures, penalties, etc.)
- Special Permits for residential uses (accessory apts, home occupations, etc.)
- Use Variances for residential uses
- Area Variances for residential uses
- Renewals/Extension of Site Plans or Special Permits that have no changes from previous approvals

No Authority to review these Actions

- Subdivisions / Lot Line Adjustments
- Interpretations

☐ Exempt Action submitted for informal review

Actions Requiring 239 Review

- ☐ Comprehensive/Master Plans
- ☐ Zoning Amendments (standards, uses, definitions, district regulations, etc.)
- ☐ Other Local Laws associated with zoning (wetlands, historic preservation, affordable housing, architectural review, etc.)
- ☐ Rezonings involving all map changes
- ☐ Architectural Review
- ☑ Site Plans (all)
- ☐ Special Permits for all non-residential uses
- ☐ Use Variances for all non-residential uses
- ☐ Area Variances for all non-residential uses
- ☐ Other (Describe):

Parcels within 500 feet of:

- ☑ State Road:
- ☐ County Road:
- ☐ State Property (with recreation area or public building)
- ☐ County Property (with recreation area or public building)
- ☐ Municipal Boundary
- ☐ Farm operation in an Agricultural District

Date Response Requested:

Entered By: **Maegerle, Tyler**

These actions are only exempt in municipalities that signed an intermunicipal agreemment with Dutchess County to that effect.

For County Office Use Only

Response From Dutchess County Department of Planning and Development

No Comments:

- ☐ Matter of Local Concern
- ☐ No Jurisdiction
- ☐ No Authority
- ☐ Withdrawn
- ☐ Incomplete - municipality must resubmit to County
- ☐ Exempt from 239 Review
- ☐ None

Comments Attached:

- ☑ Local Concern with Comments
- ☐ Conditional
- ☐ Denial
- ☐ Incomplete with Comments- municipality must resubmit to County
- ☐ Informal Comments Only (Action Exempt from 239 Review)

Date Submitted: **12/11/2025**	Notes:	☐ Major Project
Date Received: **12/11/2025**		Referral #: **ZR25-365**
Date Requested:		
Date Required: **1/9/2026**	☐ Also mailed hard copy	Reviewer: Nina Leonard
Date Transmitted: **12/31/2025**		

December 31, 2025
To: Planning Board, City of Poughkeepsie
Re: Referral ZR25-365, 49 & 85 Civic Center Plaza

The Dutchess County Department of Planning and Development has reviewed the subject referral within the framework of General Municipal Law (Article 12B, §239-l/m).

ACTION
The applicant is seeking site plan approval for the reconfiguration of an accessory parking area which services the existing 4,500 (+/-) square foot, one-story office building at 49 Civic Center Plaza, including a proposed internal connection to the parking area serving 85 Civic Center Plaza (Poughkeepsie Journal Building).

COMMENTS
We previously commented on this proposal and suggested to connect the sidewalk on the southern edge of the 85 Civic Center Plaza parking lot with the public sidewalk along Civic Center Plaza. A connection would provide a safe route to the public sidewalk and facilitate pedestrian activity across the site. Additionally, the tall stone pillars flanking the current entrance on 85 Civic Center Plaza impede pedestrian visibility and safety. The pillars could be lowered to improve safety for pedestrians as well as entering/exiting traffic.

The proposed amount of bicycle parking across both lots (5 spaces) is significantly below the required amount (20 spaces). We suggest the applicant add additional bicycle parking to better accommodate the anticipated demand.

We are pleased to see the proposed lighting fixtures have a color temperature of 3,000K or below. Detailed photometrics, however, were not included in the lighting plans. For parking lots and pedestrian areas between .01 and 2.0 footcandles is advised, with 2.0 to 5.0 foot candles in high-security areas.

And while not part of the parking lot reconfiguration, we continue to encourage the applicant and City to work together to find a way to fully redevelop 47 Civic Center Plaza in keeping with the vision of the Poughkeepsie Innovation District either as part of this current redevelopment effort or as an additional phase further down the road. If there is a possibility of an additional phase, efforts should be made to ensure nothing done now would preclude the best use of the parcel in the future.

RECOMMENDATION
The Department recommends that the Board rely upon its own study of the facts in the case with due consideration of the above comments.

Eoin Wrafter, Commissioner
By

Nina Leonard
Planner

THE CITY OF POUGHKEEPSIE
FIRE DEPARTMENT

505 MAIN STREET
POUGHKEEPSIE, NY 12601
TEL: 845-451-4079 FAX: 845-451-4191
FIRE CHIEF JOSEPH FRANCO
JFRANCO@CITYOFPOUGHKEEPSIE.COM

SITE PLAN REVIEW FORM

TO: Planning Board

FROM: Acting Fire Chief Vincent Parise

DATE: January 11, 2026

ADDRESS: 49 & 85 Civic Center Plaza

_____ The site plan is acceptable and will be signed.

__X__ The site plan is acceptable and will be signed with the following conditions:

1. Plans to show Fire Department's tower ladder turning spec template for ingress at Mill St. entrance and Ingress/egress at Civic Center Pl. entrance.

Vincent Parise
Vincent Parise, Acting Fire Chief

01/11/2026
Date

CITY OF POUGHKEEPSIE
DEVELOPMENT DEPARTMENT
JANUARY 27, 2026

49 & 85 CIVIC CENTER PLAZA: SITE PLAN
Application for site plan review for the expansion and reconfiguration of the existing accessory parking lots at 49 and 85 Civic Center Plaza. Owner/Applicant: Journal Plaza LLC/ Page Park Associates LLC; Consultant: KARC Planning, Kelly Libolt & LRC Group; Grid # 6162-69-065177 & 6162-69-090193; Zoning District: PID-B; File # PB2025-126

Project Description
The project received a negative declaration of environmental significance from the Planning Board in May 2020.

Recommendation
- Boxwood hedgerow proposed on lawn fronting Civic Center Plaza.
- Project requires area variances regarding a side yard parking setback and exceeding maximum parking.
    - Zoning Board of Appeals has requested a resolution of approval be drafted for the February ZBA meeting.
    - No speakers appeared for the public hearing at the ZBA, one written comment was submitted in favor of the variance.
- Review prior negative declaration for consistency with current action.

Project History
Application Received 11/19/25
Lead Agency Declared 12/17/25

Documents Entered into Record

Date	Description	Author	Comments
11/19/25	Application	Kelly Libolt, KARC Planning Consultants Inc.	Parking Reconfiguration
11/19/25	Cover Letter	Kelly Libolt, KARC Planning Consultants Inc.	Letter describing application
11/19/25	Letter	Daniel McCabe, COP Planning Board Acting Chair	Copy of 6/24/20 approval letter for 47-49 Civic Center Plaza

11/19/25	SEQRA	Kelly Libolt, KARC Planning Consultants Inc.	EAF Part I
11/29/25	Site Plan	LRC Group	11/19/25 CV, EX-1, SP-1, SG-1, LL-1, DN-1-3
1/13/26	Letter	Kelly Libolt, KARC Planning Consultants Inc.	Cover letter
1/13/26	Letter	Daniel McCabe, Acting Chairman, COP Planning Board	6/24/20 PB Approval Letter
1/13/26	Site Plan	LRC Group	1/9/26 CV, EX-1, SP-1, SG-1, LL-1, DN-1-3

Comments Received

Date	Author	Comments
1/13/26	Vincent Parise, Deputy Fire Chief	Turning radius needed
	Engineering Department	
12/26/25	Captain John Zeltman, COP PD	OK
12/19/25	Eric Philipp, COP Bldg Inspector	OK
12/31/25	Dylan Tuttle, DC Dept of Planning	Local Concern w comments

Motions and Resolutions
With regard to the City's file number #2025-126 and 49 & 85 Civic Center Plaza

If the Board feels the applicant has provided sufficient information regarding the proposed project they may request staff draft a resolution of approval OR the Board may request the applicant to submit further documentation.

THE CITY OF POUGHKEEPSIE
NEW YORK
DEVELOPMENT DEPARTMENT

62 CIVIC CENTER PLAZA, 2ND FLOOR
POUGHKEEPSIE, NY 12601
Phone: (845) 451-4263

APPLICATION FOR FAÇADE REVIEW

Office Use Only Code: PLSF
Fee: $350
ID # _____

NOTICE:
The City of Poughkeepsie never requests and will not accept application fees via wire transfer, ACH, or credit/debit card over the phone or by email. Fees are accepted by check via mail or cash/check in person at City Hall.

I. PROPERTY ADDRESS: 584 Main Str.

II. PROPERTY OWNER: 584 Main Street LLC (Wolf Luecherath/Mark Lehman)

III. APPLICANT: 1397 Second Avenue
ADDRESS: Suite 170
New York, NY 10021
(state and zip code)
PHONE NUMBER: 917-678-5966 (include area code)
EMAIL ADDRESS: wluecherath@yahoo.com

(If the applicant is NOT the owner, proof of owner's consent to this application MUST be provided.)

IV. CONSULTANT: Architect - Kevin Yeremic
ADDRESS: 181 Church Str.
Poughkeepsie, NY
(state and zip code)
PHONE NUMBER: 845-452-2268 (include area code)
EMAIL ADDRESS: kyeremic@lmvarchitects.com

V. FAÇADE CHANGES (Describe in detail): See cover letter.

VI. REQUIRED ATTACHMENTS:

1. Three (3) full size copies of elevations or color photographs illustrating existing conditions. Individual photos must be mounted and labeled.
2. Three (3) full size copies of elevations detailing all proposed changes, including, but not limited to, all proposed materials and colors.
3. Three (3) full size copies of a location map, or other acceptable survey or site plan, indicating the precise location of the building; and,
4. Electronic version of all of the above;
5. Short Environmental Assessment Form

VIII. SIGNATURE OF APPLICANT

THE APPLICANT HEREBY STATES THAT ALL INFORMATION GIVEN HEREIN IS ACCURATE AS OF THE DATE OF APPLICATION.

Signature _____ Date 1/10/26

Print Name: Wolf Luecherath

Revised October 2025: Previous Editions Obsolete

01-10-2026

Planning Board
City of Poughkeepsie

Re: 584 Main Street, Poughkeepsie

Dear Members of the City of Poughkeepsie Planning Board,

We are writing regarding the previously approved project at 584 Main Street, Poughkeepsie, NY, consisting of a 30-unit warehouse conversion and expansion with two ground-floor commercial spaces.

We are appearing before the Planning Board to discuss and clarify several items related to the completed construction. Specifically, the purpose of this discussion is to address:

1. The installation of the building windows without the originally proposed grills;
2. The location of the Central Hudson electric meter bank, which was placed in its current location based on Central Hudson's recommendation due to the size and number of required meters;
3. The 3rd floor addition on the approved site plan had an error showing existing bricks where new hardi-board siding was to be located; and
3. The alignment of the rear building windows.

We appreciate the opportunity to review these items with the Planning Board and to provide any additional information or documentation that may be helpful in addressing the Board's comments and concerns.

Thank you for your time and consideration. We look forward to discussing these matters at the Planning Board meeting.

Sincerely,

Wulf Lueckerath
917-678-5966

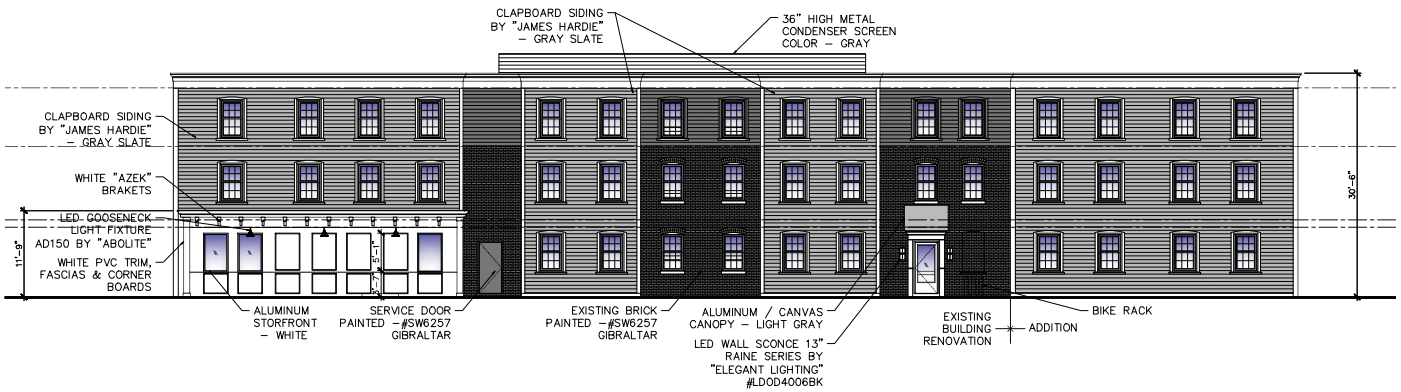

H–1 WEST ELEVATION
1/8"=1'–0"

Angled Reflector (AD150)

Abolite® LED Angled Reflector



Abolite® LED Angled Reflector

PRODUCT DIMENSIONS

Prefix	Height (C)	Diameter (B)	Neck (E)
AD150	12" (305mm)	11" (254mm)	1-1/4" (133mm)

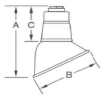

10" MATTE BLACK FINISH
3500K COLOR TEMPERTURE
24"x8" GOOSENECK WALL BRACKET – MATTE BLACK
8'–0" ABOVE SIDEWALK TYP. FOR 11 UNITS

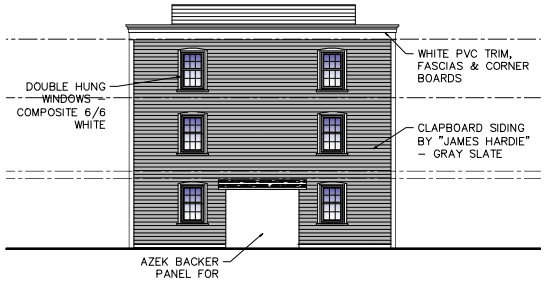

E–1 SOUTH ELEVATION
1/8"=1'–0"

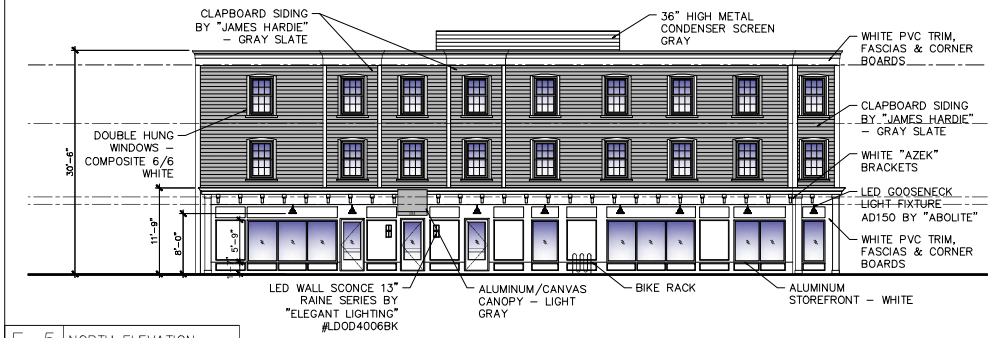

E–5 NORTH ELEVATION
1/8"=1'–0"



LED WALL SCONCE
RAINE SERIES BY ELEGANT LIGHTING
13" HIGH BLACK FINISH
MODEL #LDOD4006BK

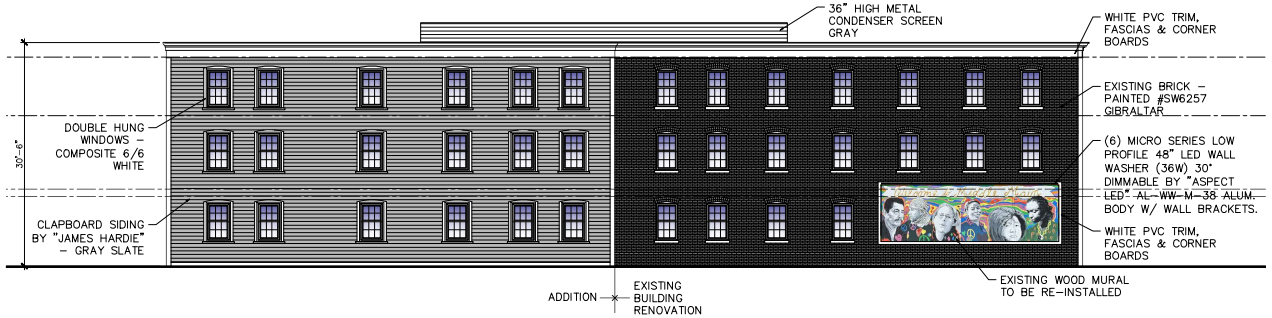

A–1 EAST ELEVATION
1/8"=1'–0"



JAMES HARDIE LAP SIDING
COLOR – GRAY SLATE



SHERWIN WILLIAMS
COLOR – #SW6257 GIBRALTAR

No.	REVISION/SUBMISSION	DATE
4	PLANNING BOARD	12–17–25
3	FIRE PROTECTION DETAILS	10–31–24
2	AS–BUILT FLOOR PLAN	9–5–24
1	RESTROOMS FOR RETAIL	3–16–23

Liscum McCormack VanVoorhis LLP
ARCHITECTURE PLANNING INTERIORS
181 CHURCH STREET POUGHKEEPSIE, NEW YORK 12601
PHONE 845-452-2268 FAX 845-452-2732

PROJECT
584 MAIN STREET
POUGHKEEPSIE, NY

DRAWING
ELEVATIONS

SEAL: REGISTERED ARCHITECT JAMES L. McCORMACK NO. 015333-1 STATE OF NEW YORK

DRAWN BY	PROJECT NUMBER
KY	20044
CHECKED BY	DATE
MM	01–06–23

DRAWING NUMBER
A200

FILE: P:\2000\JOB #-JOB NAME\

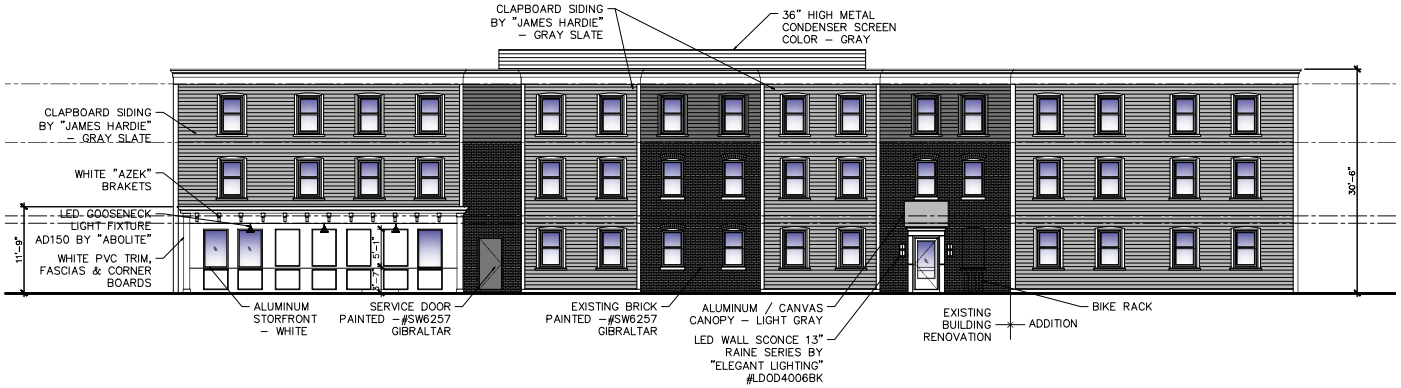

H–1 | WEST ELEVATION
1/8"=1'–0"

Angled Reflector (AD150)

Abolite® LED Angled Reflector



Abolite® LED Angled Reflector

PRODUCT DIMENSIONS

Prefix	Height (C)	Diameter (B)	Neck (E)
AD150	12" (305mm)	10" (254mm)	1-1/4" (32mm)

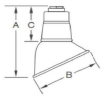

10" MATTE BLACK FINISH
3500K COLOR TEMPERTURE
24"x8" GOOSENECK WALL BRACKET – MATTE BLACK
8'–0" ABOVE SIDEWALK TYP. FOR 11 UNITS

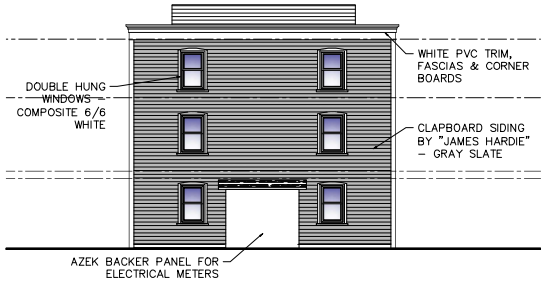

E–1 | SOUTH ELEVATION
1/8"=1'–0"

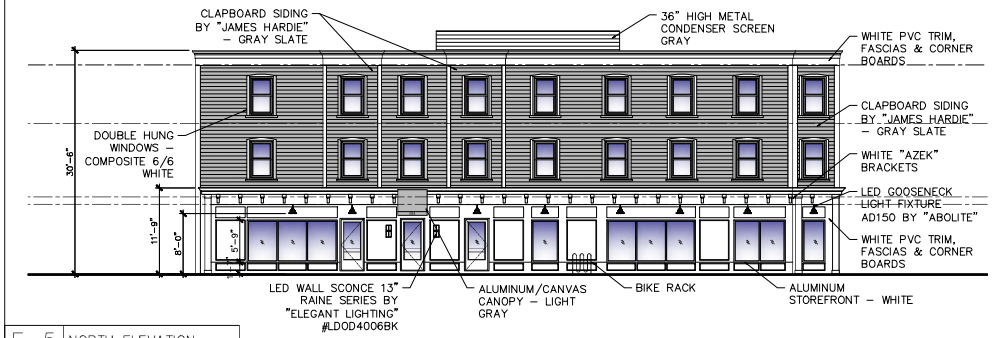

E–5 | NORTH ELEVATION
1/8"=1'–0"



LED WALL SCONCE
RAINE SERIES BY ELEGANT LIGHTING
13" HIGH BLACK FINISH
MODEL #LDOD4006BK

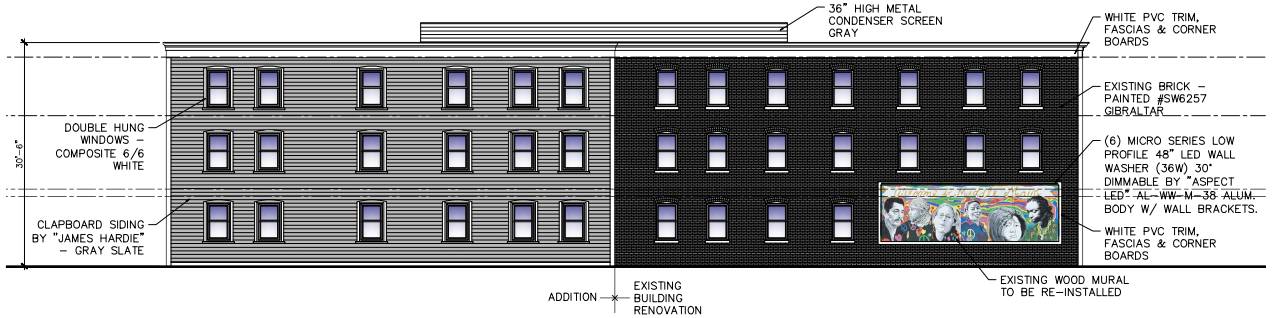

A–1 | EAST ELEVATION
1/8"=1'–0"



JAMES HARDIE LAB SIDING
COLOR – GRAY SLATE



SHERWIN WILLIAMS
COLOR – #SW6257 GIBRALTAR

No.	REVISION/SUBMISSION	DATE
4	PLANNING BOARD	12–17–25
3	FIRE PROTECTION DETAILS	10–31–24
2	AS–BUILT FLOOR PLAN	9–5–24
1	RESTROOMS FOR RETAIL	3–16–23

Liscum McCormack VanVoorhis LLP
ARCHITECTURE PLANNING INTERIORS
181 CHURCH STREET POUGHKEEPSIE, NEW YORK 12601
PHONE 845-452-2268 FAX 845-452-2732

PROJECT
584 MAIN STREET
POUGHKEEPSIE, NY

DRAWING
ELEVATIONS

SEAL: REGISTERED ARCHITECT JAMES L. McCORMACK NO. 015393-1 STATE OF NEW YORK

DRAWN BY	PROJECT NUMBER
KY	20044
CHECKED BY	DATE
MM	01–06–23

DRAWING NUMBER
A200

FILE: P:\2000\JOB #-JOB NAME\

Short Environmental Assessment Form
Part 1 - Project Information

Instructions for Completing

Part 1 – Project Information. The applicant or project sponsor is responsible for the completion of Part 1. Responses become part of the application for approval or funding, are subject to public review, and may be subject to further verification. Complete Part 1 based on information currently available. If additional research or investigation would be needed to fully respond to any item, please answer as thoroughly as possible based on current information.

Complete all items in Part 1. You may also provide any additional information which you believe will be needed by or useful to the lead agency; attach additional pages as necessary to supplement any item.

Part 1 – Project and Sponsor Information

584 Main Street

Name of Action or Project:
584 Main Street

Project Location (describe, and attach a location map):

Brief Description of Proposed Action:
30-unit warehouse conversion

Name of Applicant or Sponsor:	Telephone: 917-678-5516
Wolf Lueckerath / Mark Lehman	E-Mail: wlueckerath@yahoo.com

Address:
1357 2nd Ave, Suite 170

City/PO:	State:	Zip Code:
NY	NY	10021

	NO	YES
1. Does the proposed action only involve the legislative adoption of a plan, local law, ordinance, administrative rule, or regulation? If Yes, attach a narrative description of the intent of the proposed action and the environmental resources that may be affected in the municipality and proceed to Part 2. If no, continue to question 2.	☑	☐
2. Does the proposed action require a permit, approval or funding from any other government Agency? If Yes, list agency(s) name and permit or approval:	☑	☐

3. a. Total acreage of the site of the proposed action? _____ acres
   b. Total acreage to be physically disturbed? _____ acres
   c. Total acreage (project site and any contiguous properties) owned or controlled by the applicant or project sponsor? _____ acres

4. Check all land uses that occur on, are adjoining or near the proposed action:
   ☐ Urban ☐ Rural (non-agriculture) ☐ Industrial ☑ Commercial ☑ Residential (suburban)
   ☐ Forest ☐ Agriculture ☐ Aquatic ☐ Other(Specify):
   ☐ Parkland

	NO	YES	N/A
5. Is the proposed action,			
a. A permitted use under the zoning regulations?	☐	☑	☐
b. Consistent with the adopted comprehensive plan?	☐	☑	☐
6. Is the proposed action consistent with the predominant character of the existing built or natural landscape?	NO	YES	
	☐	☑	
7. Is the site of the proposed action located in, or does it adjoin, a state listed Critical Environmental Area?	NO	YES	
If Yes, identify: _____	☑	☐	
8. a. Will the proposed action result in a substantial increase in traffic above present levels?	NO	YES	
	☑	☐	
b. Are public transportation services available at or near the site of the proposed action?	☐	☑	
c. Are any pedestrian accommodations or bicycle routes available on or near the site of the proposed action?	☐	☑	
9. Does the proposed action meet or exceed the state energy code requirements?	NO	YES	
If the proposed action will exceed requirements, describe design features and technologies:			
_____	☐	☑	
_____			
10. Will the proposed action connect to an existing public/private water supply?	NO	YES	
If No, describe method for providing potable water: _____	☐	☑	
_____			
11. Will the proposed action connect to existing wastewater utilities?	NO	YES	
If No, describe method for providing wastewater treatment: _____	☐	☑	
_____			
12. a. Does the project site contain, or is it substantially contiguous to, a building, archaeological site, or district which is listed on the National or State Register of Historic Places, or that has been determined by the Commissioner of the NYS Office of Parks, Recreation and Historic Preservation to be eligible for listing on the State Register of Historic Places?	NO	YES	
	☑	☐	
b. Is the project site, or any portion of it, located in or adjacent to an area designated as sensitive for archaeological sites on the NY State Historic Preservation Office (SHPO) archaeological site inventory?	☑	☐	
13. a. Does any portion of the site of the proposed action, or lands adjoining the proposed action, contain wetlands or other waterbodies regulated by a federal, state or local agency?	NO	YES	
	☑	☐	
b. Would the proposed action physically alter, or encroach into, any existing wetland or waterbody?	☑	☐	
If Yes, identify the wetland or waterbody and extent of alterations in square feet or acres: _____			
_____			
_____			

14. Identify the typical habitat types that occur on, or are likely to be found on the project site. Check all that apply:

☐ Shoreline ☐ Forest ☐ Agricultural/grasslands ☐ Early mid-successional

☐ Wetland ☐ Urban ☐ Suburban

	NO	YES
15. Does the site of the proposed action contain any species of animal, or associated habitats, listed by the State or Federal government as threatened or endangered?	☑	☐
16. Is the project site located in the 100-year flood plan?	☑	☐
17. Will the proposed action create storm water discharge, either from point or non-point sources?	☑	☐
If Yes,		
a. Will storm water discharges flow to adjacent properties?	☑	☐
b. Will storm water discharges be directed to established conveyance systems (runoff and storm drains)?	☑	☐
If Yes, briefly describe:		
18. Does the proposed action include construction or other activities that would result in the impoundment of water or other liquids (e.g., retention pond, waste lagoon, dam)?	☑	☐
If Yes, explain the purpose and size of the impoundment:		
19. Has the site of the proposed action or an adjoining property been the location of an active or closed solid waste management facility?	☑	☐
If Yes, describe:		
20. Has the site of the proposed action or an adjoining property been the subject of remediation (ongoing or completed) for hazardous waste?	☑	☐
If Yes, describe:		

I CERTIFY THAT THE INFORMATION PROVIDED ABOVE IS TRUE AND ACCURATE TO THE BEST OF MY KNOWLEDGE

Applicant/sponsor/name: Wilf Luebbert Date: 1/10/26

Signature: _____ Title: owner

PRINT FORM


584
COMING
SOON!



584 Main St.

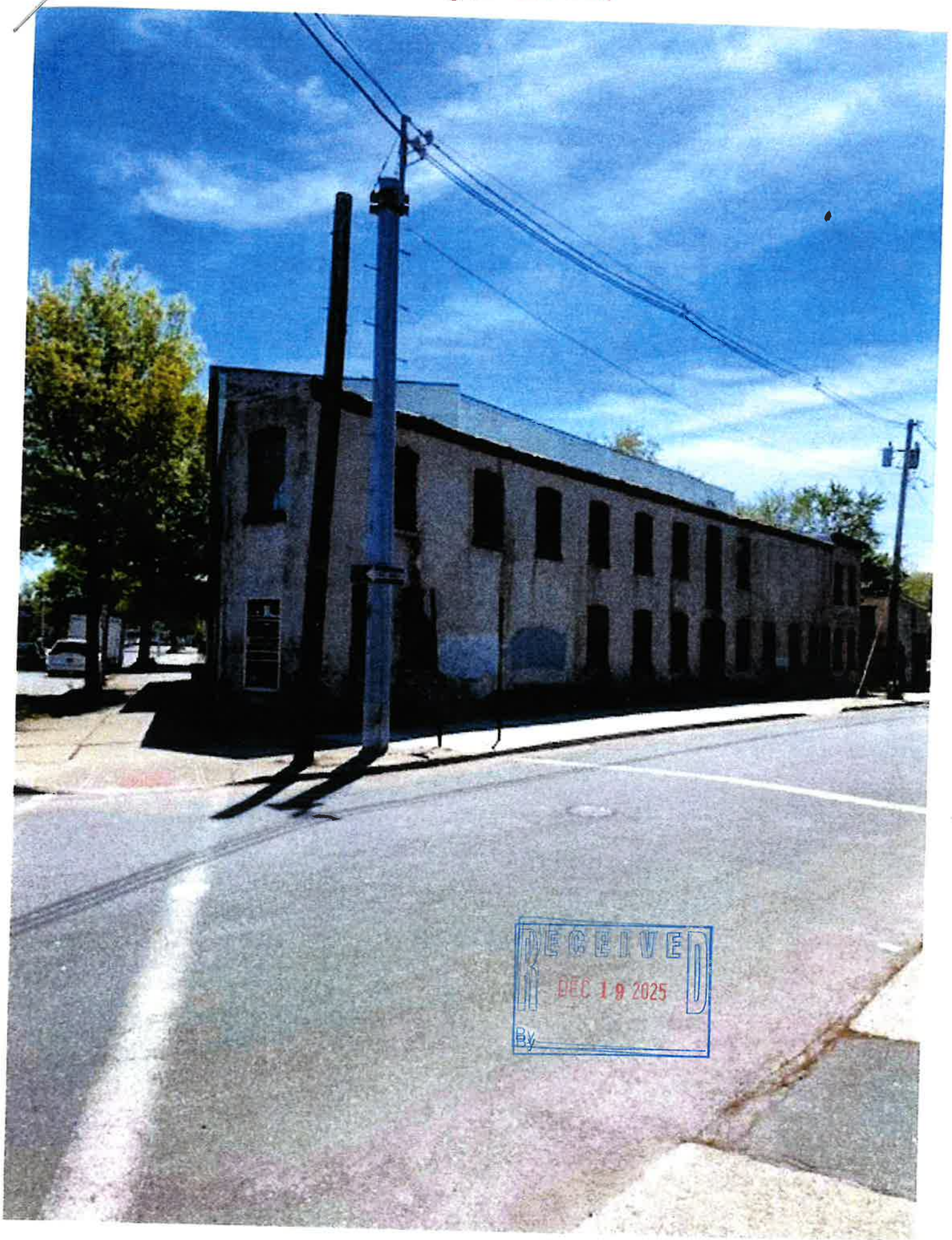

RECEIVED
DEC 19 2025
By



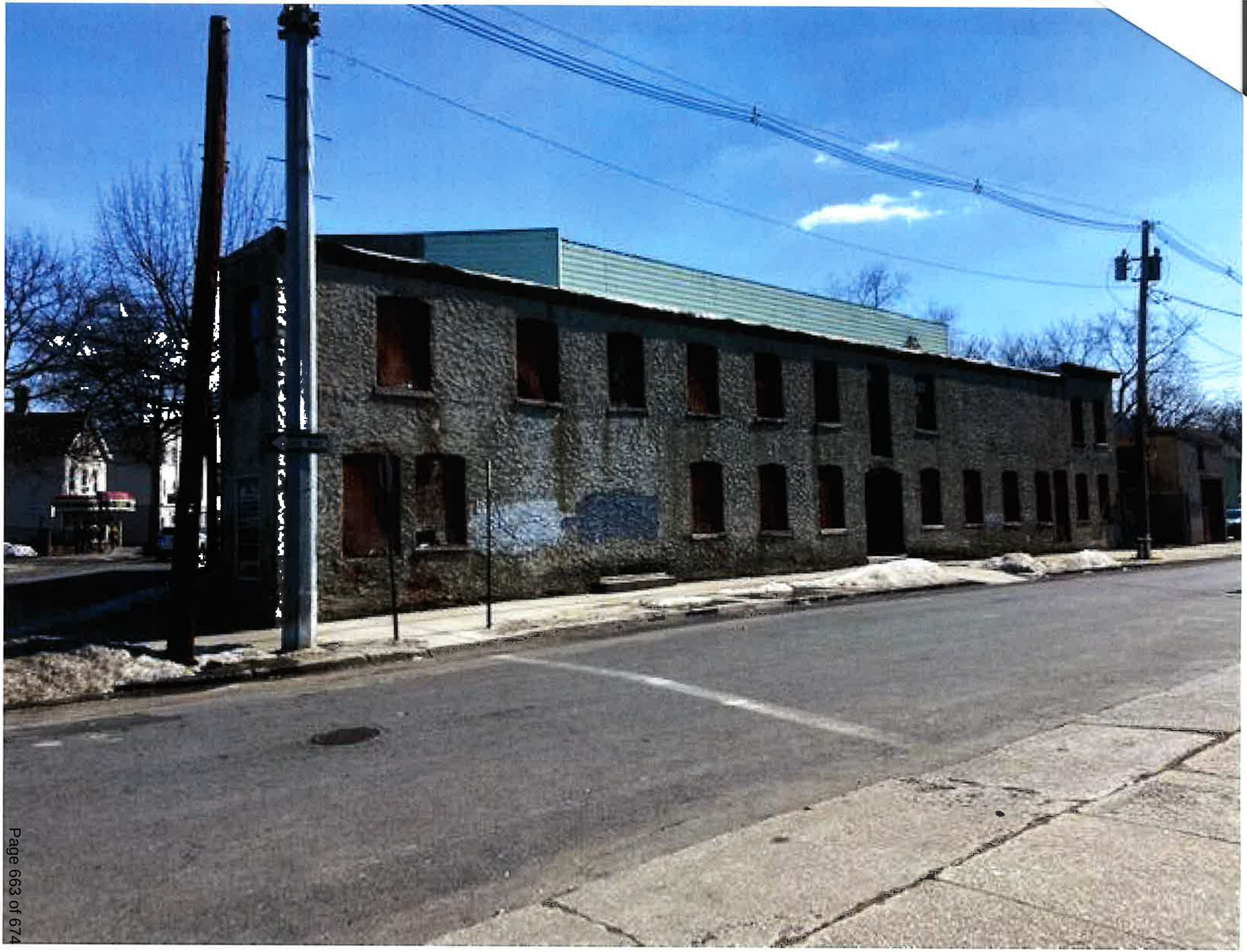




584

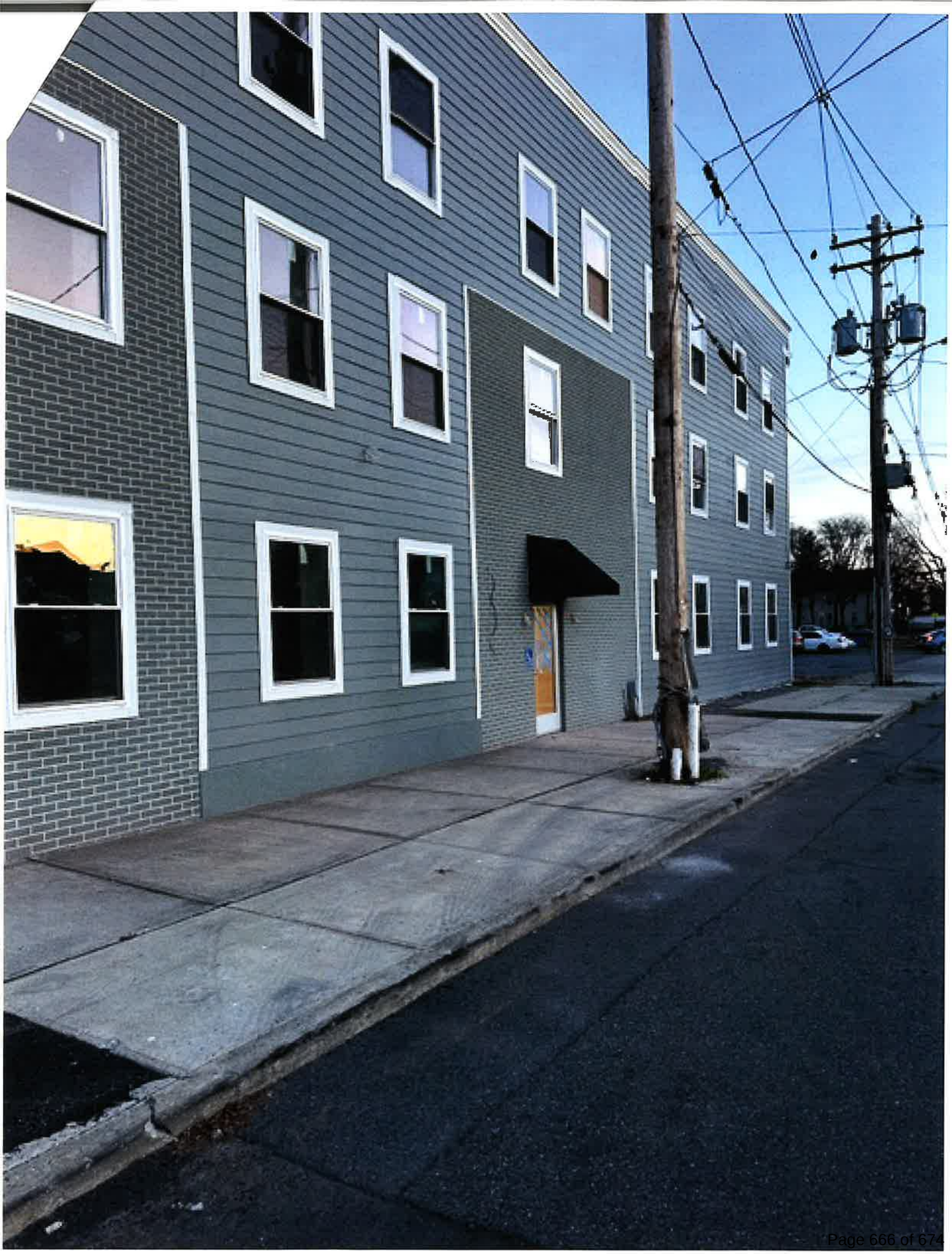




584
COMING
SOON!





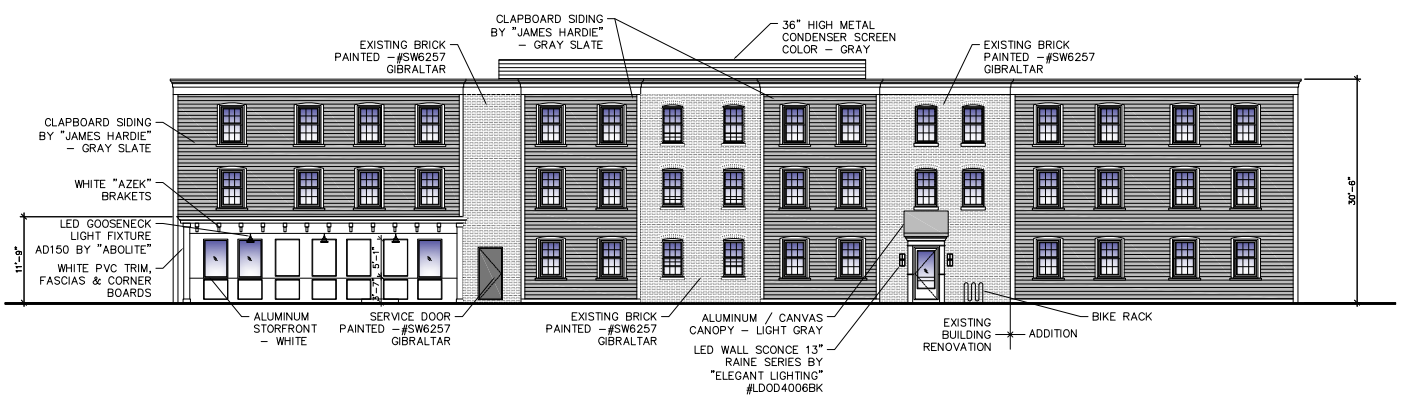

H–1 | WEST ELEVATION
1/8"=1'–0"

Angled Reflector (AD150)

Abolite® LED Angled Reflector



Abolite® LED Angled Reflector

PRODUCT DIMENSIONS

Prefix	Height (A)	Diameter (B)	Neck (C)
AD150	12" (305mm)	10" (254mm)	3-5/8" (105mm)

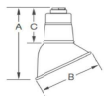

10" MATTE BLACK FINISH
3500K COLOR TEMPERTURE
24"x8" GOOSENECK WALL BRACKET – MATTE BLACK
8'–0" ABOVE SIDEWALK TYP. FOR 11 UNITS

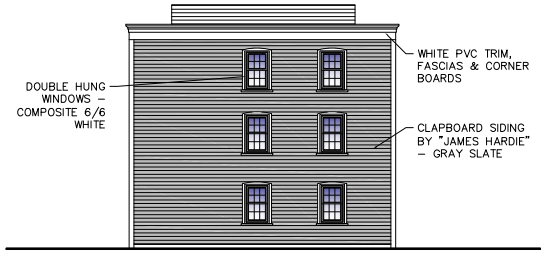

E–1 | SOUTH ELEVATION
1/8"=1'–0"

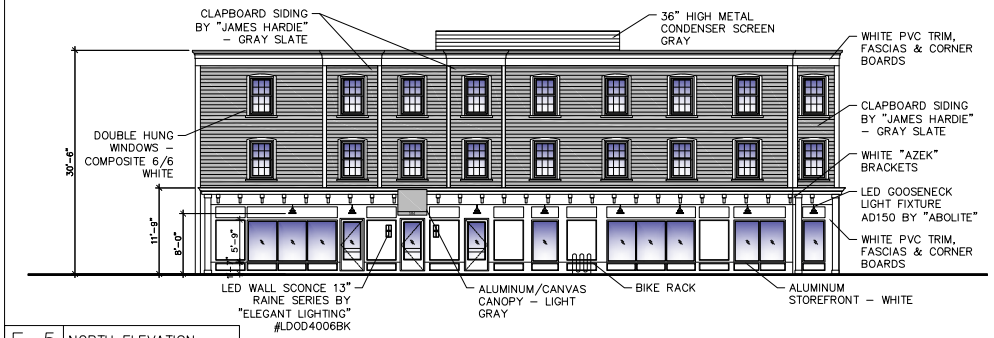

E–5 | NORTH ELEVATION
1/8"=1'–0"



LED WALL SCONCE
RAINE SERIES BY ELEGANT LIGHTING
13" HIGH BLACK FINISH
MODEL #LDOD4006BK

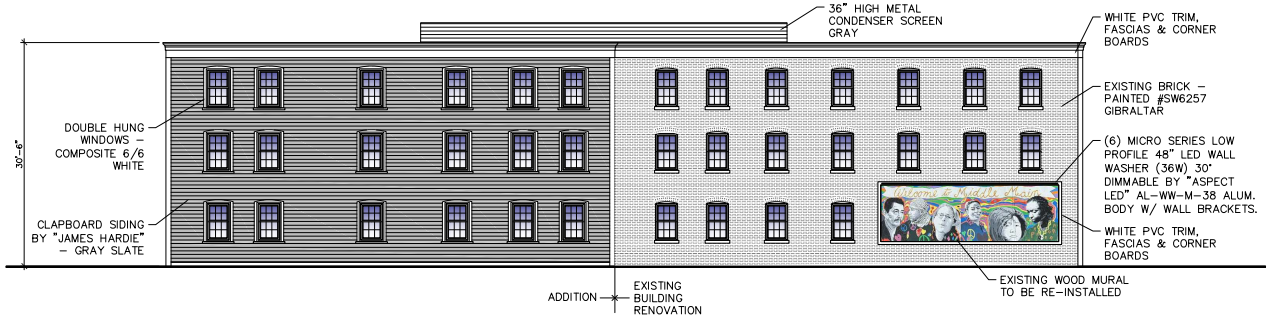

A–1 | EAST ELEVATION
1/8"=1'–0"



JAMES HARDIE LAB SIDING
COLOR – GRAY SLATE



SHERWIN WILLIAMS
COLOR – #SW6257 GIBRALTAR

No.	REVISION/SUBMISSION	DATE

Liscum McCormack VanVoorhis LLP
ARCHITECTURE
PLANNING INTERIORS
181 CHURCH STREET
POUGHKEEPSIE, NEW YORK 12601
PHONE 845-452-2268 FAX 845-452-3752

PROJECT
584 MAIN STREET
POUGHKEEPSIE, NY

DRAWING
ELEVATIONS

DRAWN BY	PROJECT NUMBER
KY	20044
CHECKED BY	DATE
MM	10–01–21

DRAWING NUMBER
A200

FILE P:\2020\20044 - JOB NAME\



CLAPBOARD SIDING
JAMES HARDIE
GRAY SLATE



EXISTING BRICK MASONRY PAINT
SHERWIN WILLIAMS
SW6257 GILBRALTAR

CITY OF POUGHKEEPSIE
DEVELOPMENT DEPARTMENT
JANUARY 27, 2026

584 MAIN STREET: FAÇADE REVIEW
Application for review of amended as-built elevations at 584 Main Street. Owner/Applicant: 584 Main Street, LLC; Consultant: Kevin Yereance, Architect; Grid # 6161-24-439917; Zoning District: ; File #2025-133

Project Description
The project has been determined to be a Type 2 Action under SEQRA **requiring no further environmental review.**

Recommendation
- Project approved in 2021 for the conversion of a warehouse to a 30 unit multifamily residence with two ground floor commercial spaces.
- Applicant applying to amend the approved elevations according to the provided as built elevations
- Differences include omission of window muntins/grills, location of an electric meter bank, relocation of windows on the southern elevation, change of material from brick to hardi-board above the proposed brick bands on the western elevation.
- Note discrepancy between submitted photos and proposed elevations regarding arrangement of windows on Palmer Avenue.

Project History
First Appearance 1/27/26

Documents Entered into Record

Date	Description	Author	Comments
10/1/21	Elevations	Liscum McCormick VanVoorhis LLP	10/1/21 Approved Elevations
10/11/2021	Letter	MAAD Architects, Chris Mansfield, RA	Design Review Letter, initial review
1/10/26	Façade Review Application	Wulf Luckerath	
1/10/26	Cover Letter	Wulf Luckerath	
12/17/25	Elevations	Liscum McCormick VanVoorhis LLP	Proposed Elevations without muntins on windows

12/17/25	Elevations	Liscum McCormick VanVoorhis LLP	Alternate proposed elevations including muntins on windows.
12/19/25	Photos	Wulf Luckerath	Exterior Photos

Comments Received

Date	Author	Comments
	Vincent Parise, Deputy Fire Chief	
	Engineering Department	
	Captain John Zeltman, COP PD	
	Eric Philipp, COP Bldg Inspector	
	Dylan Tuttle, DC Dept of Planning	

Motions and Resolutions
With regard to the City's file number # 2025-133, 584 Main Street

If the Board feels the applicant has provided sufficient information regarding the proposed project they may request staff draft a resolution of approval or denial OR the Board may request the applicant to submit further documentation.